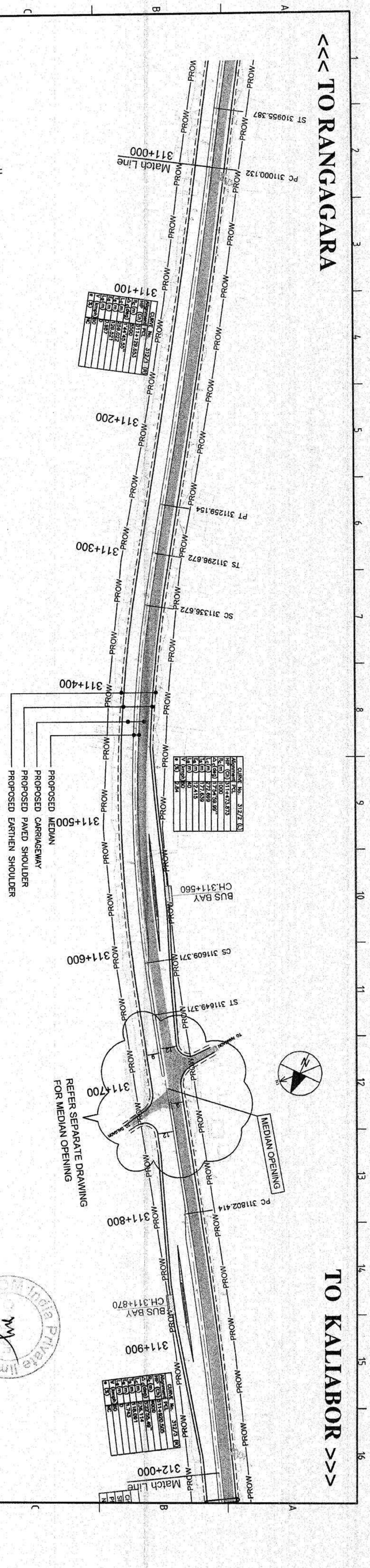

1. DETAILS OF DRAINS WILL BE PROVIDED ALONG WITH DRAINAGE PLAN & PROFILE.
2. PAVEMENT CRUST DETAILS TO BE ADOPTED AS PER PAVEMENT DESIGN REPORT.
3. LME = LEFT MEDIAN EDGE
   RME = RIGHT MEDIAN EDGE
4. MEDIAN OPENING LOCATION IS TENTATIVE WHICH IS TO BE FINALISED AT SITE DURING EXECUTION.
5. SEPARATE DRAWING FOR DETAILING OF MINIOR & MAJOR JUNCTION,BUS BAYS, MEDIAN OPENING SHALL BE PROVIDED SEPARATELY.
6. DRAWING FOR CULVERTS, MINOR BRIDGE & FO SHALL BE PROVIDED SEPARATELY.
7. SEPARATE DRAWING SHALL BE PROVIDED FOR MEDIAN OPENING COMING INTO JUNCTIONS.

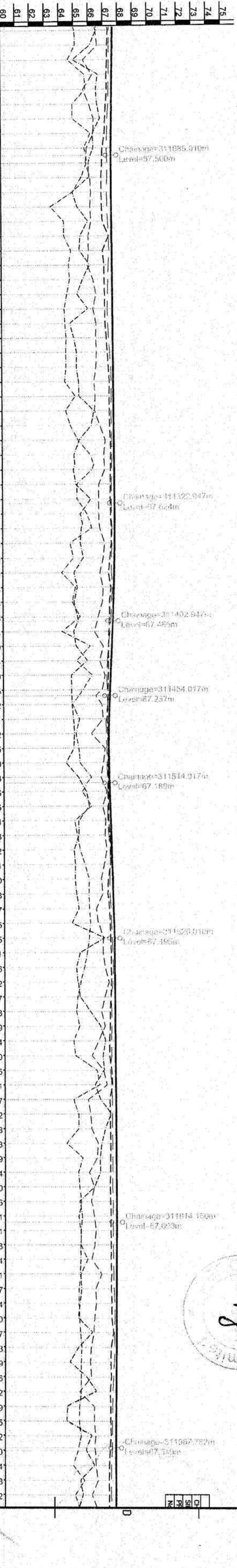

Design Chainage (Km)	Proposed Road Level at Median Edge -Left Carriageway (m)	Proposed Road Level at Median Edge -Right Carriageway (m)	Existing Ground/Road Level at Median Edge -Left Carriageway (m)	Existing Ground/Road Level at Median Edge -Right Carriageway (m)	Ground Level at 25m to Left of Proposed Median C/L (m)	Ground Level at 25m to Right of Proposed Median C/L (m)	Existing Centre Road Level
311000	67.658	67.658	67.341	66.508	66.537	65.078	67.424
311010	67.639	67.639	67.297	66.611	66.130	65.100	67.398
311020	67.621	67.621	67.280	65.639	64.958	64.607	67.398
311030	67.602	67.602	67.222	66.250	66.647	65.729	67.388
311040	67.584	67.584	67.244	65.638	66.502	65.792	67.360
311050	67.565	67.565	67.167	66.021	66.578	64.899	67.339
311060	67.547	67.547	67.107	66.327	66.766	64.893	67.274
311070	67.528	67.528	67.083	66.311	66.262	66.107	67.239
311080	67.510	67.510	66.918	65.851	66.302	65.690	67.224
311090	67.503	67.503	66.888	65.777	65.965	65.853	67.243
311100	67.508	67.508	66.839	66.072	66.004	65.478	67.238
311110	67.513	67.513	66.837	66.130	64.857	64.882	67.204
311120	67.519	67.519	66.854	66.060	65.176	63.370	67.229
311130	67.524	67.524	66.902	66.127	65.909	64.256	67.269
311140	67.529	67.529	67.321	65.923	65.374	64.265	67.305
311150	67.534	67.534	66.901	65.942	65.318	64.735	67.341
311160	67.539	67.539	66.991	65.862	66.008	64.580	67.298
311170	67.545	67.545	67.015	66.248	65.522	64.640	67.254
311180	67.550	67.550	67.029	66.423	65.147	64.459	67.227
311190	67.555	67.555	67.039	66.234	65.881	64.274	67.202
311200	67.560	67.560	67.060	66.428	64.646	64.314	67.226
311210	67.565	67.565	67.134	66.401	64.923	64.395	67.287
311220	67.570	67.570	67.189	66.433	65.095	64.358	67.347
311230	67.576	67.576	67.250	66.394	65.072	64.374	67.408
311240	67.581	67.581	67.310	66.273	65.229	64.281	67.443
311250	67.586	67.586	67.291	66.333	65.254	64.985	67.434
311260	67.591	67.591	67.292	66.281	66.249	64.342	67.418
311270	67.596	67.596	67.311	66.643	66.068	64.635	67.426
311280	67.602	67.602	67.349	67.000	65.234	65.159	67.442
311290	67.607	67.607	67.375	66.899	64.884	65.987	67.449
311300	67.612	67.612	67.340	66.948	64.834	66.107	67.438
311310	67.617	67.617	67.325	66.553	64.994	65.063	67.403
311320	67.622	67.622	67.318	66.535	65.997	65.064	67.403
311330	67.626	67.626	67.340	66.536	65.286	65.724	67.418
311340	67.624	67.624	67.378	66.603	65.342	66.033	67.443
311350	67.615	67.615	67.377	66.918	65.286	64.568	67.437
311360	67.600	67.600	67.292	66.827	65.475	64.815	67.394
311370	67.579	67.579	67.194	66.601	64.845	63.995	67.384
311380	67.552	67.552	67.351	66.811	65.058	64.932	67.481
311390	67.518	67.518	67.250	66.759	64.836	64.716	67.371
311400	67.478	67.478	67.247	66.462	65.066	65.245	67.351
311410	67.434	67.434	67.202	66.207	64.800	64.007	67.268
311420	67.389	67.389	67.169	66.803	64.958	65.923	67.171
311430	67.344	67.344	67.154	66.562	65.723	64.998	67.094
311440	67.299	67.299	67.149	66.917	64.623	66.038	67.054
311450	67.255	67.255	67.118	66.722	64.634	65.410	67.077
311460	67.212	67.212	67.095	66.702	64.660	64.707	67.100
311470	67.181	67.181	67.064	66.771	64.772	65.161	66.968
311480	67.162	67.162	67.093	65.972	64.828	64.931	66.986
311490	67.155	67.155	67.117	66.875	64.775	65.110	67.024
311500	67.160	67.160	67.105	66.782	64.253	65.181	67.035
311510	67.178	67.178	67.113	66.609	65.088	65.966	67.049
311520	67.206	67.206	67.118	67.006	65.625	65.347	67.074
311530	67.235	67.235	67.120	66.714	65.812	65.958	67.058
311540	67.264	67.264	67.119	66.908	65.080	64.808	67.058
311550	67.293	67.293	67.184	66.846	65.088	64.981	67.133
311560	67.322	67.322	67.256	66.975	64.757	65.170	67.209
311570	67.351	67.351	67.243	66.804	64.850	65.493	67.239
311580	67.380	67.380	67.070	66.597	64.830	65.779	67.175
311590	67.408	67.408	67.048	66.690	64.926	65.758	67.188
311600	67.437	67.437	67.152	66.251	65.075	65.790	67.253
311610	67.466	67.466	67.191	66.404	64.645	65.856	67.289
311620	67.495	67.495	67.218	66.717	66.817	65.779	67.338
311630	67.501	67.501	67.255	66.690	65.138	65.636	67.374
311640	67.506	67.506	67.257	66.835	64.895	65.434	67.399
311650	67.512	67.512	67.261	67.107	65.011	65.196	67.363
311660	67.517	67.517	67.228	66.813	65.123	64.971	67.254
311670	67.523	67.523	67.174	66.590	65.815	64.892	67.279
311680	67.529	67.529	67.169	66.821	66.510	65.084	67.282
311690	67.534	67.534	67.133	66.383	66.853	64.689	67.269
311700	67.540	67.540	67.129	65.931	66.678	64.815	67.270
311710	67.545	67.545	67.265	66.709	66.756	66.269	67.174
311720	67.551	67.551	67.316	66.939	66.141	66.454	67.277
311730	67.557	67.557	67.139	65.670	66.488	64.672	67.300
311740	67.562	67.562	67.169	65.813	67.234	65.007	67.314
311750	67.568	67.568	67.162	65.899	66.823	65.017	67.289
311760	67.573	67.573	67.191	66.334	66.590	64.191	67.329
311770	67.579	67.579	67.177	66.265	66.461	65.295	67.318
311780	67.584	67.584	67.176	65.727	66.476	64.991	67.317
311790	67.590	67.590	67.146	66.054	66.093	65.063	67.308
311800	67.596	67.596	67.170	65.854	65.068	65.181	67.343
311810	67.601	67.601	67.198	66.052	65.251	65.013	67.337
311820	67.601	67.601	67.188	66.171	65.174	65.138	67.343
311830	67.598	67.598	67.201	66.085	65.135	65.156	67.343
311840	67.594	67.594	67.191	65.878	65.129	65.607	67.362
311850	67.591	67.591	67.226	66.554	65.102	65.154	67.382
311860	67.587	67.587	67.202	66.144	65.201	65.012	67.408
311870	67.584	67.584	67.250	66.193	65.074	65.013	67.441
311880	67.580	67.580	67.233	66.063	64.959	65.045	67.464
311890	67.577	67.577	67.361	66.009	65.934	65.105	67.413
311900	67.573	67.573	67.202	65.831	65.000	65.206	67.455
311910	67.569	67.569	67.169	65.782	64.384	65.161	67.407
311920	67.566	67.566	67.209	65.847	65.512	65.149	67.358
311930	67.562	67.562	67.129	65.054	66.201	65.157	67.333
311940	67.559	67.559	67.180	66.053	64.224	65.056	67.307
311950	67.555	67.555	67.174	66.046	64.182	65.033	67.298
311960	67.552	67.552	67.215	66.148	65.888	65.163	67.293
311970	67.550	67.550	67.135	66.143	65.517	64.961	67.287
311980	67.554	67.554	67.103	66.178	66.077	64.639	67.239
311990	67.558	67.558	67.079	66.323	65.123	65.407	67.227
312000	67.562	67.562	67.112	65.918	65.313	64.788	67.249

Proposed Vertical Alignment - Left Carriageway: .700m; .185; G=0.052 L=237.937m; L=80.000m R=-16005.952m K=160.060; L=51.070m G=-0.448; R=8142.089m L=60.000m K=81.421; G=0.289 L=105.993m; G=0.056 L=194.140m; L=153.632m G=-0.035

Proposed Vertical Alignment - Right Carriageway: .700m; .185; G=0.052 L=237.937m; L=80.000m R=-16005.952m K=160.060; L=51.070m G=-0.448; R=8142.089m L=60.000m K=81.421; G=0.289 L=105.993m; G=0.056 L=194.140m; L=153.632m G=-0.035

Proposed Horizontal Alignment at Median C/L: R=8500.000m L=259.022m; L=37.518m; L=40.000m; R=-1000.000m L=272.699m; L=40.000m; L=153.043m; R=4000.000m L=236.114m

Superelevation/Crossfall (%): e=2.500; e=2.844; e=2.500

Cross Section Type: Type - 1

CBR Subgrade/Borrow Area: CBR (10%); CBR (10%); CBR (10%)

Pavement Overlay: BC=50mm, DBM=60mm/Partial Reconstruction*; BC=50mm, DBM=60mm/Partial Reconstruction*; BC=50mm, DBM=60mm/Partial Reconstruction*

Pavement Widening/New Construction: BC=50mm, DBM=90mm, WMM=250mm, GSB=200 mm; BC=50mm, DBM=90mm, WMM=250mm, GSB=200 mm; BC=50mm, DBM=90mm, WMM=250mm, GSB=200 mm

* Pavement layers thickness in Partial Reconstruction area (Overlay Side) shall be as per detail Cross Section.

Rev.	Date	Description on Revisions
R2	June 2018	Profile updated as per site condition, bus bay incorporated.
R1	Nov. 2017	Revised as per AE comment dated 09 Oct. 2017

Revisions

CLIENT:-

NATIONAL HIGHWAYS
& INFRASTRUCTURE
DEVELOPMENT
CORPORATION LTD.

AUTHORITY'S ENGINEER:

STUP Consultants P. Ltd
&
Ayoleeza Consultants P. Ltd.

AUTHORISED SIGNATORY | DATE

PROOF CHECKED CONSULTANT:-

CE TESTING
Company Pvt. Ltd

AUTHORISED SIGNATORY | DATE 13/12/18

SAFETY CONSULTANT:-

Chaitanya Projects
Consultancy Pvt. Ltd

NEW DELHI

AUTHORISED SIGNATORY | DATE

PROJECT:

FOUR LANING OF NH-37 FROM RANGAGARA TO KALIABOR TINIALI (CH: 297.000 KM TO CH: 315.315 KM) IN NAGAON DISTRICT IN THE STATE OF ASSAM UNDER SARDP-NE, PHASE A ON EPC MODE

EPC CONTRACTOR:-

SIMPLEX INFRASTRUCTURES LIMITED
27, SHAKESPEARE SARANI, KOLKATA-17, INDIA

CONSULTANTS:-

AECOM
9th Floor, Infinity Tower C DLF Cyber City
DLF Phase II, Gurgaon-122002, Haryana, India

DRAWN	DESIGN	CHECKED BY	APPROVED BY
		SL Team Leader	Deputy Director

SCALE:-
HOR- 1 : 2000
VER- 1 : 200

TITLE:-

PLAN AND PROFILE
FROM Km. 311+000 To Km. 312+000

DRAWING NO.:- AECOM-DELD15159-DD-DWG-PP- 0115

REV. R2

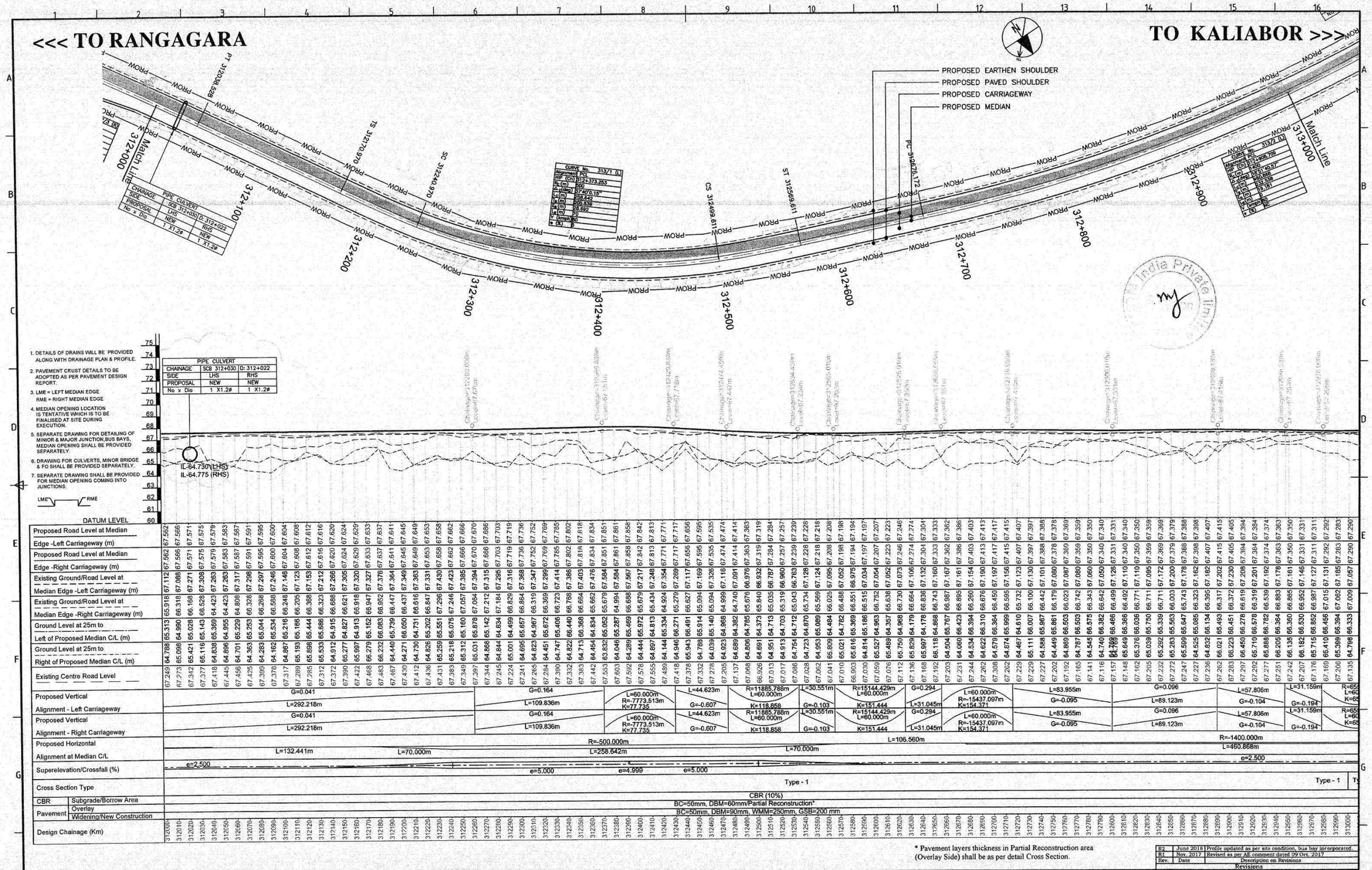

* Pavement layers thickness in Partial Reconstruction area (Overlay Side) shall be as per detail Cross Section.

Rev.	Date	Description on Revisions
R2	June 2018	Profile updated as per site condition, bus bay incorporated.
R1	Nov. 2017	Revised as per AE comment dated 29 Oct. 2017

CLIENT:- NATIONAL HIGHWAYS & INFRASTRUCTURE DEVELOPMENT CORPORATION LTD.

AUTHORITY'S ENGINEER: STUP Consultants P. Ltd & Ayoleeza Consultants P. Ltd.

PROOF CHECKED CONSULTANT:- CE TESTING Company Pvt. Ltd.

SAEFTY CONSULTANT: Chaitanya Projects Consultancy Pvt. Ltd

PROJECT: FOUR LANING OF NH-37 FROM RANGAGARA TO KALIABOR TINIALI (CH: 297.000 KM TO CH: 315.315 KM) IN NAGAON DISTRICT IN THE STATE OF ASSAM UNDER SARDP-NE, PHASE A ON EPC MODE

EPC CONTRACTOR:- SIMPLEX INFRASTRUCTURES LIMITED, 27, SHAKESPEARE SARANI, KOLKATA-17, INDIA

CONSULTANTS:- AECOM, 9th Floor, Infinity Tower C DLF Cyber City, DLF Phase II, Gurgaon-122002, Haryana, India

DRAWN | DESIGN | CHECKED BY (Team Leader) | APPROVED BY (Project Director)

SCALE:- HOR- 1 : 2000, VER- 1 : 200

TITLE:- PLAN AND PROFILE FROM Km. 312+000 To Km. 313+000

DRAWING NO.:- AECOM-DELD15159-DD-DWG-PP- 0116

REV. R2

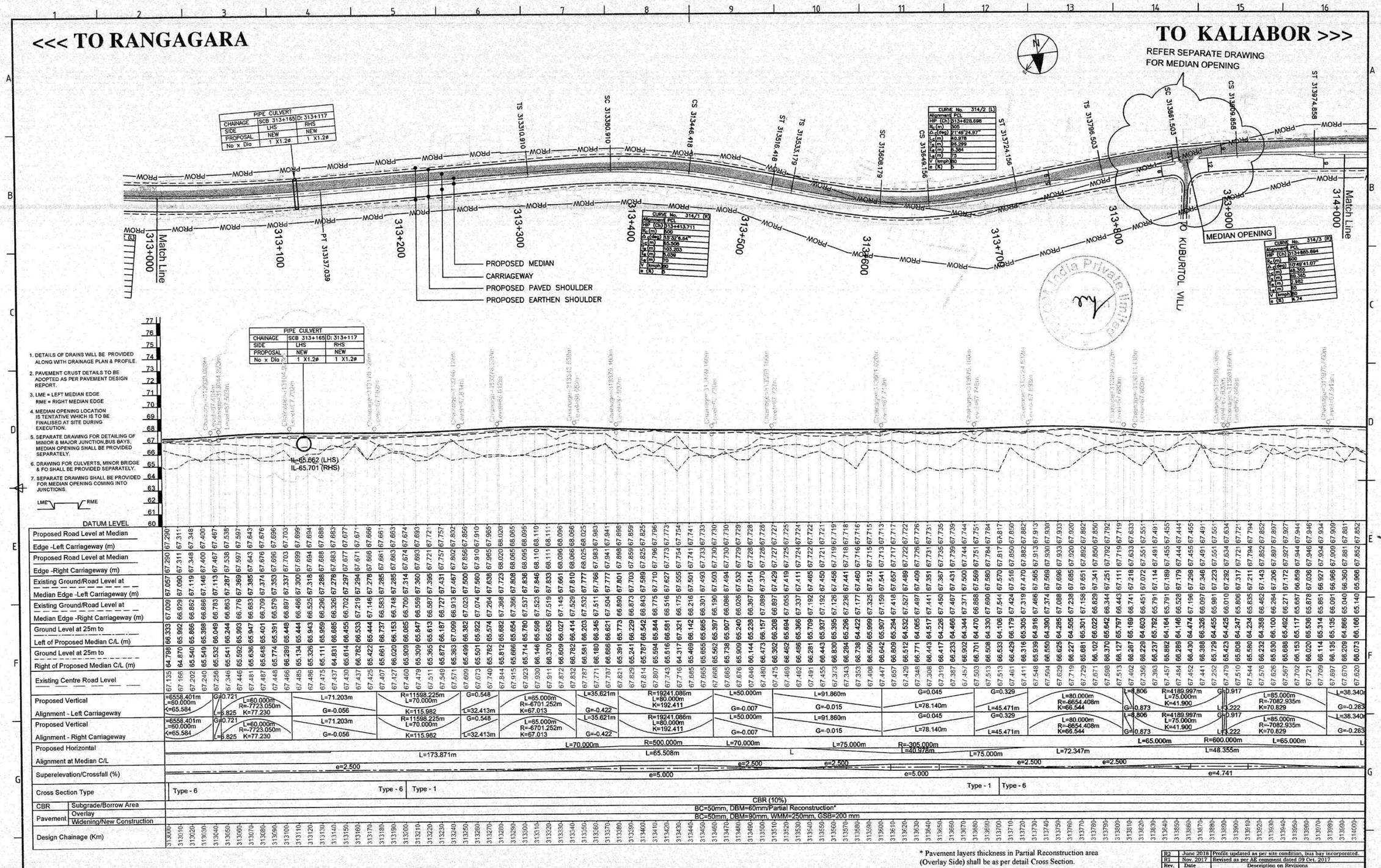

1. DETAILS OF DRAINS WILL BE PROVIDED ALONG WITH DRAINAGE PLAN & PROFILE.
2. PAVEMENT CRUST DETAILS TO BE ADOPTED AS PER PAVEMENT DESIGN REPORT.
3. LME = LEFT MEDIAN EDGE
   RME = RIGHT MEDIAN EDGE
4. MEDIAN OPENING LOCATION IS TENTATIVE WHICH IS TO BE FINALISED AT SITE DURING EXECUTION.
5. SEPARATE DRAWING FOR DETAILING OF MINIOR & MAJOR JUNCTION,BUS BAYS, MEDIAN OPENING SHALL BE PROVIDED SEPARATELY.
6. DRAWING FOR CULVERTS, MINOR BRIDGE & FO SHALL BE PROVIDED SEPARATELY.
7. SEPARATE DRAWING SHALL BE PROVIDED FOR MEDIAN OPENING COMING INTO JUNCTIONS.

Rev.	Date	Description on Revisions
R2	June 2018	Profile updated as per site condition, bus bay incorporated.
R1	Nov. 2017	Revised as per AE comment dated 09 Oct. 2017

Revisions

CLIENT:- NATIONAL HIGHWAYS & INFRASTRUCTURE DEVELOPMENT CORPORATION LTD.

AUTHORITY'S ENGINEER: STUP Consultants P. Ltd & Ayoleeza Consultants P. Ltd. — AUTHORISED SIGNATORY — DATE

PROOF CHECKED CONSULTANT:- CE TESTING Company Pvt. Ltd — AUTHORISED SIGNATORY — DATE

SAEFTY CONSULTANT:- Chaitanya Projects Consultancy Pvt. Ltd — AUTHORISED SIGNATORY — DATE

PROJECT: FOUR LANING OF NH-37 FROM RANGAGARA TO KALIABOR TINIALI (CH: 297.000 KM TO CH: 315.315 KM) IN NAGAON DISTRICT IN THE STATE OF ASSAM UNDER SARDP-NE, PHASE A ON EPC MODE

EPC CONTRACTOR:- SIMPLEX INFRASTRUCTURES LIMITED, 27, SHAKESPEARE SARANI, KOLKATA-17, INDIA

CONSULTANTS:- AECOM, 9th Floor, Infinity Tower C DLF Cyber City, DLF Phase II, Gurgaon-122002, Haryana, India — DRAWN | DESIGN | CHECKED BY (Team Leader) | APPROVED BY (Project Director)

SCALE:- HOR- 1 : 2000, VER- 1 : 200

TITLE:- PLAN AND PROFILE FROM Km. 313+000 To Km. 314+000

DRAWING NO.:- AECOM-DELD15159-DD-DWG-PP- 0117 — REV. R2

Simplex letter No. 181
letter date – 20.08.18

Stup letter No – 130 Date – 12/09/18

NATIONAL HIGHWAYS & INFRASTRUCTURE DEVELOPMENT CORPORATION LTD.

Four Laning of NH – 37 from Rangagara to Kaliabor Tiniali (Ch: 297.000 Km to Ch: 315.315 Km of NH-37) in Nagaon District in the State of Assam under SARDP – NE, Phase A, on EPC Basis




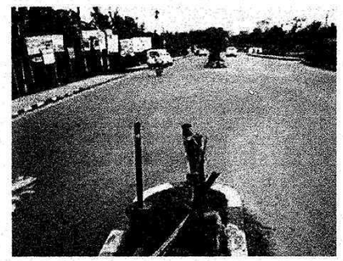

Latest

Approved
12.09.18
Team Leader
STUP Consultants Pvt. Ltd.
Nagaon-782001 (Assam)

2/2

Final Drg.
PSP
5/6/2/2

HIGHWAY DRAWINGS
(VOLUME-I)
(CH. 314+000 to CH. 315+315)

CONTRACTOR:-

SIMPLEX INFRASTRUCTURES LIMITED

CONSULTANTS:-

AECOM

AECOM India Private Limited

JULY 2018

INDEX

DESCRIPTION	DRAWING NO.
COVER PAGE	
INDEX	
LEGEND AND ABBREVIATION	AECOM-DELD15159-DD-DWG-LEG-01
TYPICAL CROSS SECTION	AECOM-DELD15159-DD-DWG-TCS-005
HORIZONTAL REPORT	AECOM-DELD15159-DD-DWG-HOR-003
VERTICAL ALIGNMENT REPORT	AECOM-DELD15159-DD-DWG-VER-001 (2 SHEETS)
PLAN & PROFILE (KM 314+000 TO 315+560)	AECOM-DELD15159-DD-DWG-PP-0118 To PP-0119 (3 SHEETS)
VERTICAL ALIGNMENT REPORT (SERVICE ROAD)	AECOM-DELD15159-DD-DWG-SR-VER-002
PLAN & PROFILE OF SERVICE ROAD (KM 314+500 TO 315+470)	AECOM-DELD15159-DD-DWG-SR-0209

12·07·18

LEGEND & ABBREVIATIONS

LEGEND

SYMBOL	DESCRIPTION	SYMBOL	DESCRIPTION
EXISTING		**PROPOSED**	
	EXISTING CARRIAGEWAY		MEDIAN
			PROPOSED CENTRE LINE
	RIVER		PAVED SHOULDER EDGE
	TEMPLE		EARTHEN SHOULDER EDGE
			SERVICE ROAD
	POND		DRAIN
	SHOPS		EARTHWORK
	BUILDINGS		
	EXISTING CULVERT/EXISTING BRIDGE	—PROW ——PROW ——	PROPOSED ROW
			PIPE CULVERT
K	KILOMETRE POST		BOX CULVERT
•EP	ELECTRIC POLE		SLAB CULVERT
	WELL		
	BM PILLAR		MAJOR/MINOR BRIDGE
	TREES		
	TOWER		VUP/LVUP/PUP/FLYOVER
•OFC	OFC		
	TELEPHONE POLE		
	TRANSFORMER		
	HAND PUMP		
	EXISTING PIPE CULVERT		
	ROAD BOUNDARY		

NOTES:-

A. GENERAL

1) ALL CHAINAGES ARE IN KILOMETRE AND ALL LEVELS ARE IN METERS UNLESS OTHERWISE NOTED.
2) DETAILS SHOWN IN PLANS ARE BASED ON FIELD SURVEY CARRIED OUT AND SUPPLEMENTED BY SUBSEQUENT FIELD CHECKING AS REQUIRED.
3) ALL COORDINATES ARE UTM NORTHING AND EASTING.
   BENCH MARKS (BM) ARE IN REFERENCE TO MSL CONNECTED WITH THE FOLLOWING SURVEY OF INDIA BMs.

ABBREVIATIONS:-

CL	CENTER LINE
PROW	PROPOSED RIGHT OF WAY
VUP	VEHICULAR UNDER PASS
LVUP	LIGHT VEHICULAR UNDER PASS
PUP	PEDESTRIAN UNDER PASS
CUP	CATTLE UNDER PASS
LME	LEFT MEDIAN EDGE
RME	RIGHT MEDIAN EDGE
LHS	LEFT HAND SIDE
RHS	RIGHT HAND SIDE
SCB	SCHEDULE B CHAINAGE
R	RADIUS OF CURVE
DC	DEGREE OF CURVATURE
LC	LENGTH OF CURVATURE
TS	TENGENT LENGTH
ES	APEX DISTANCE
LS	LENGTH OF SPIRAL CURVE
S	SHIFT
Δ	DEFLECTION ANGLE
V	DESIGN SPEED Km/hr
e%	SUPERELEVATION
PC	POINT OF TANGENT
PT	POINT OF TANGENT
HIP	HORIZONTAL INTERSECTION POINT

Team Leader
STUP Consultants Pvt. Ltd
Nagaon-782001 (Assam)

Resident Engineer
STUP Consultant Pvt. Ltd.
Nagaon-782001 (Assam)

Rev.	Date	Description on Revisions
		Revisions

CLIENT:- NATIONAL HIGHWAYS & INFRASTRUCTURE DEVELOPMENT CORPORATION LTD.

AUTHORITY'S ENGINEER: STUP Consultants P. Ltd & Ayoleeza Consultants P. Ltd.
AUTHORISED SIGNATORY | DATE

PROOF CHECKED CONSULTANT: CE TESTING Company Pvt. Ltd
AUTHORISED SIGNATORY | DATE

SAEFTY CONSULTANT:- Chaitanya Projects Consultancy Pvt. Ltd
AUTHORISED SIGNATORY | DATE

PROJECT: FOUR LANING OF NH-37 FROM RANGAGARA TO KALIABOR TINIALI (CH: 297.000 KM TO CH: 315.315 KM) IN NAGAON DISTRICT IN THE STATE OF ASSAM UNDER SARDP-NE, PHASE A ON EPC MODE

EPC CONTRACTOR:- SIMPLEX INFRASTRUCTURES LIMITED, 27, SHAKESPEARE SARANI, KOLKATA-17, INDIA

CONSULTANTS:- AECOM, 9th Floor, Infinity Tower C DLF Cyber City, DLF Phase II, Gurgaon-122002, Haryana, India
DRAWN | DESIGN | CHECKED BY | APPROVED BY

SCALE:- N.T.S

TITLE:- LEGEND AND ABBREVIATION

DRAWING NO.:- AECOM-DELD15159-DD-DWG-LEG-01 | REV. R0

12·09·18

TYPICAL CROSS SECTION

12.09.18

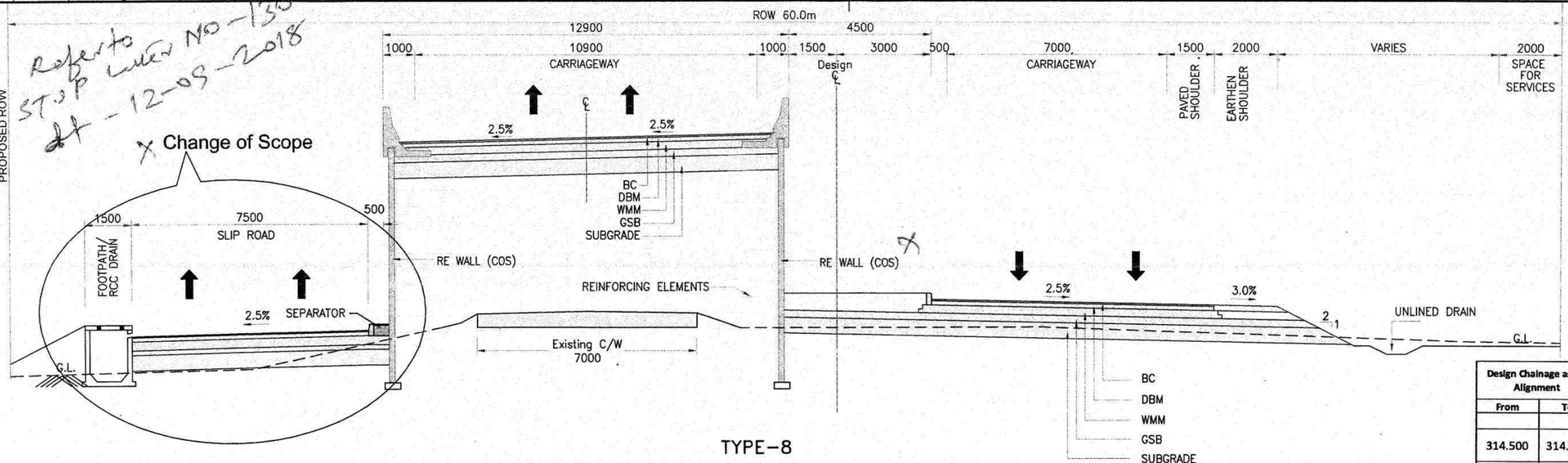

Design Chainage as per Alignment		Length (km)	Cross Section Type
From	To		
314.500	314.767	0.267	TYPE 8
315.217	315.470	0.253	TYPE 8

TYPE–8

TYPICAL CROSS SECTION FOR FLYOVER APPROACH (RIGHT SIDE WIDENING)

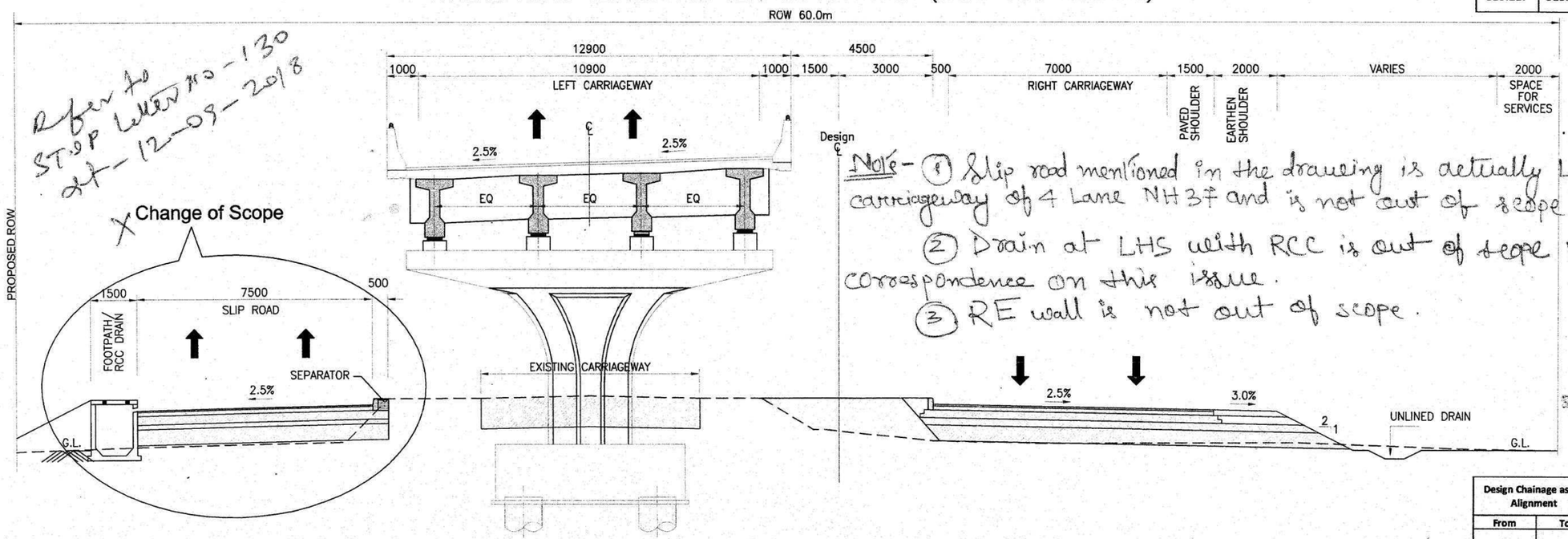

Note- (1) Slip road mentioned in the drawing is actually Left 2 Lane carriageway of 4 Lane NH37 and is not out of scope.

(2) Drain at LHS with RCC is out of scope refer to correspondence on this issue.

(3) RE wall is not out of scope.

Team Leader
STUP Consultants Pvt Ltd
Nagaon-782001 (Assam)

Design Chainage as per Alignment		Length (km)	Cross Section Type
From	To		
314.767	315.217	0.450	TYPE 9

TYPE–9

TYPICAL CROSS SECTION FOR FLYOVER LOCATION (RIGHT SIDE WIDENING)

Note:
1. Right of Way (ROW) as shown in TCS is meant to indicate proposed cross section of highway shall be accommodated within ROW.
2. Actual Right of Way (ROW) has marked in Alignment Plan based on data provided by AE vide letter ref: STUP / NH 37 / SIL / 2017 /01 dated 9 Feb 2017 and site meeting on 15 Feb 2017.
3. Construction of Slip Road along with Associated works are under change of scope (COS).

FOR APPROVAL

Resident Engineer
STUP Consultant Pvt. Ltd.
Nagaon-782001 (Assam)

Rev.	Date	Description on Revisions
R2	July 2018	Slip Road added & FO location shifted
R1	Nov. 2017	Revised as per AE comment dated 09 Oct. 2017
R0	August 2017	First Submission

Revisions

CLIENT:- NATIONAL HIGHWAYS & INFRASTRUCTURE DEVELOPMENT CORPORATION LTD.

AUTHORITY'S ENGINEER: STUP Consultants P. Ltd & Ayoleeza Consultants P. Ltd. — AUTHORISED SIGNATORY — DATE

PROOF CHECKED CONSULTANT:- CE TESTING Company Pvt. Ltd — AUTHORISED SIGNATORY — DATE

SAEFTY CONSULTANT:- Chaitanya Projects Consultancy Pvt. Ltd — AUTHORISED SIGNATORY — DATE

PROJECT: FOUR LANING OF NH-37 FROM RANGAGARA TO KALIABOR TINIALI (CH: 297.000 KM TO CH: 315.315 KM) IN NAGAON DISTRICT IN THE STATE OF ASSAM UNDER SARDP-NE, PHASE A ON EPC MODE

EPC CONTRACTOR:- SIMPLEX INFRASTRUCTURES LIMITED, 27, SHAKESPEARE SARANI, KOLKATA-17, INDIA

CONSULTANTS:- AECOM, 9th Floor, Infinity Tower C DLF Cyber City, DLF Phase II, Gurgaon-122002, Haryana, India — DRAWN — DESIGN — CHECKED BY — APPROVED BY

SCALE:- 1 : 1000

TITLE:- TYPICAL CROSS SECTION

DRAWING NO.:- AECOM-DELD151159-DD-DWG-TCS- 005 — REV. R2

HORIZONTAL ALIGNMENT REPORT

Horizontal Alignment report From km 314+500 To Km 315+560

S.No.	HIP Chainage	Easting	Northing	Radius (m)	Hand of Arc	Transition Start Chainage	Arc start Chainage	Arc End Chainage	Transition End Chainage	Transition Length (m)	Arc Length(m)	Design Speed (kmph)	Deflection Angle (D)	Superelevation (%)
314/3	313885.694	2934541	493431.2	600	Right	313796.503	313861.503	313909.858	313974.858	65	48.354693	80	10.828	4.741
315/1	314321.916	2934618	493002.7	370	Right	314053.007	314138.007	314479.358	314564.358	85	341.35078	80	66.052	5.000
316/1	315011.324	2935295	492774.1	1200	Right		314598.585	315393.642			795.05748	80	37.961	NC

Team Leader
STUP Consultants Pvt. Ltd
Nagaon-782001 (Assam)

Resident Engineer
STUP Consultant Pvt. Ltd.
Nagaon-782001 (Assam)

Rev.	Date	Description on Revisions
R2	JULY 2018	DESIGN UPDATED AS PER SITE CONDITION, SLIP ROAD ADDED, FO LOCATION SHIFTED
R1	Nov. 2017	Revised as per AE comments dated 9 Oct. 2017

Revisions

CLIENT:- NATIONAL HIGHWAYS & INFRASTRUCTURE DEVELOPMENT COPORATION LTD.

AUTHORITY'S ENGINEER: STUP Consultants P. Ltd & Ayoleeza Consultants P. Ltd. — AUTHORISED SIGNATORY — DATE

PROOF CHECKED CONSULTANT: CETEST — AUTHORISED SIGNATORY — DATE

SAEFTY CONSULTANT:- Chaitanya Projects Consultancy Pvt. Ltd — AUTHORISED SIGNATORY — DATE

PROJECT: FOUR LANING OF NH-37 FROM RANGAGARA TO KALIABOR TINIALI (CH: 297.000 KM TO CH: 315.315 KM) IN NAGAON DISTRICT IN THE STATE OF ASSAM UNDER SARDP-NE, PHASE A ON EPC MODE

EPC CONTRACTOR:- SIMPLEX INFRASTRUCTURES LIMITED, 27, SHAKESPEARE SARANI, KOLKATA-17, INDIA

CONSULTANTS:- AECOM, 9th Floor, Infinity Tower-O DLF Cyber City, DLF Phase II, Gurgaon-122002, Haryana, India — DRAWN | DESIGN | CHECKED BY (Team Leader) | APPROVED BY (Dept. Director)

SCALE:-

TITLE:- Horizontal Report

DRAWING NO.:- AECOM-DELD15159-DD-DWG-HOR-003 — REV. R2

VERTICAL ALIGNMENT REPORT

Vertical Curve Report KM 314+000 to KM 315+560 (LHS)

IP			Element Type	Type of Curve	Length / Curve Length	Start		End		Gradient			K Value
NO.	Chainage	Level				Curve Start Chainage	Curve Start Level	Curve End Chainage	Curve End Level	IN	OUT	Difference	
1	314+045.000	67.725	Curve	Sag	60.000	314+015.000	67.810	314+075.000	67.736	-0.283	0.037	0.320	187.626
			Grade		60.115	314+075.000	67.736	314+135.115	67.758				
2	314+135.115	67.758								0.037	0.140	0.103	
			Grade		125.901	314+135.115	67.758	314+261.016	67.934				
3	314+261.016	67.934								0.140	0.288	0.148	
			Grade		93.994	314+261.016	67.934	314+355.010	68.205				
4	314+355.010	68.205								0.288	0.211	-0.077	
			Grade		106.945	314+355.010	68.205	314+461.955	68.430				
5	314+509.455	68.530	Curve	Sag	95.000	314+461.955	68.430	314+556.955	69.480	0.211	2.000	1.789	53.102
			Grade		316.038	314+556.955	69.480	314+872.993	75.799				
6	314+997.993	78.299	Curve	Hog	250.000	314+872.993	75.799	315+122.993	75.799	2.000	-2.000	-4.000	62.510
			Grade		345.966	315+122.993	75.799	315+468.959	68.881				
7	315+498.959	68.281	Curve	Sag	60.000	315+468.959	68.881	315+528.959	68.242	-2.000	-0.130	1.870	32.095
			Grade		6.041	315+528.959	68.242	315+535.000	68.234				
8	315+555.000	68.208	Curve	Sag	40.000	315+535.000	68.234	315+575.000	68.344	-0.130	0.678	0.808	49.473

Team Leader
STUP Consultants Pvt. Ltd
Nagaon-782001 (Assam)

Resident Engineer
STUP Consultant Pvt. Ltd
Nagaon-782001 (Assam)

Rev.	Date	Description on Revisions
R2	JULY 2018	DESIGN UPDATED AS PER SITE CONDITION, SLIP ROAD ADDED, FO LOCATION SHIFTED
R1	Nov. 2017	Revised as per AE comment dated 09 Oct. 2017

Revisions

CLIENT:- NATIONAL HIGHWAYS & INFRASTRUCTURE DEVELOPMENT COPORATION LTD.

AUTHORITY'S ENGINEER: STUP Consultants P. Ltd & Ayoleeza Consultants P. Ltd. — AUTHORISED SIGNATORY — DATE

PROOF CHECKED CONSULTANT:- CEST — AUTHORISED SIGNATORY — DATE 10/8/18

SAEFTY CONSULTANT:- Chaitanya Projects Consultancy Pvt. Ltd — AUTHORISED SIGNATORY — DATE

PROJECT: FOUR LANING OF NH-37 FROM RANGAGARA TO KALIABOR TINIALI (CH: 297.000 KM TO CH: 315.315 KM) IN NAGAON DISTRICT IN THE STATE OF ASSAM UNDER SARDP-NE, PHASE A ON EPC MODE

EPC CONTRACTOR:- SIMPLEX INFRASTRUCTURES LIMITED, 27, SHAKESPEARE SARANI, KOLKATA-17, INDIA

CONSULTANTS:- AECOM, 9th Floor, Infinity Tower C, DLF Cyber City, DLF Phase II, Gurgaon-122002, Haryana, India — DRAWN — DESIGN — CHECKED BY (Team Leader) — APPROVED BY (Deputy Director)

SCALE:- NTS

TITLE:- Vertical Report (LHS)

DRAWING NO.:- AECOM-DELD15159-DD-DWG-VER-001 (1 OF 2) — REV. R2

Vertical Curve Report KM 314+000 to KM 315+560 (RHS)

IP			Element Type	Type of Curve	Length / Curve Length	Start		End		Gradient			K Value
NO.	Chainage	Level				Curve Start Chainage	Curve Start Level	Curve End Chainage	Curve End Level	IN	OUT	Difference	
1	314+045.000	67.725	Curve	Sag	60.000	314+015.000	67.810	314+075.000	67.736	-0.283	0.037	0.320	187.626
			Grade		60.115	314+075.000	67.736	314+135.115	67.758				
2	314+135.115	67.758								0.037	0.140	0.103	
			Grade		125.901	314+135.115	67.758	314+261.016	67.934				
3	314+261.016	67.934								0.140	0.288	0.148	
			Grade		93.994	314+261.016	67.934	314+355.010	68.205				
4	314+355.010	68.205								0.288	0.224	-0.064	
			Grade		168.959	314+355.010	68.205	314+523.969	68.584				
5	314+553.969	68.651	Curve	Hog	60.000	314+523.969	68.584	314+583.969	68.671	0.224	0.066	-0.158	378.539
			Grade		33.022	314+583.969	68.671	314+616.991	68.693				
6	314+646.991	68.713	Curve	Hog	60.000	314+616.991	68.693	314+676.991	68.581	0.066	-0.439	-0.505	118.744
			Grade		16.954	314+676.991	68.581	314+693.945	68.506				
7	314+723.945	68.375	Curve	Sag	60.000	314+693.945	68.506	314+753.945	68.359	-0.439	-0.050	0.389	154.259
			Grade		34.251	314+753.945	68.359	314+788.196	68.342				
8	314+818.196	68.327	Curve	Sag	60.000	314+788.196	68.342	314+848.196	68.405	-0.050	0.261	0.311	192.480
			Grade		120.479	314+848.196	68.405	314+968.675	68.720				
9	314+968.675	68.720								0.261	0.084	-0.177	
			Grade		102.287	314+968.675	68.720	315+070.962	68.806				
10	315+070.962	68.806								0.084	0.077	-0.007	
			Grade		73.837	315+070.962	68.806	315+144.799	68.863				
11	315+174.799	68.885	Curve	Hog	60.000	315+144.799	68.863	315+204.799	68.668	0.077	-0.725	-0.802	74.870
			Grade		43.186	315+204.799	68.668	315+247.985	68.355				
12	315+277.985	68.138	Curve	Sag	60.000	315+247.985	68.355	315+307.985	68.182	-0.725	0.149	0.874	68.667
			Grade		52.153	315+307.985	68.182	315+360.138	68.260				
13	315+360.138	68.260								0.149	-0.013	-0.162	
			Grade		97.867	315+360.138	68.260	315+458.005	68.248				
14	315+488.045	68.224	Curve	Hog	60.000	315+458.005	68.248	315+518.005	68.234	-0.013	-0.032	-0.019	3084.913
			Grade		19.858	315+518.005	68.234	315+537.863	68.228				
15	315+557.863	68.221	Curve	Sag	40.000	315+537.863	68.228	315+577.863	68.359	-0.032	0.686	0.718	55.702

Yasin Laskar
STUP Consultants Pvt. Ltd
Nagaon-782001 (Assam)

Resident Engineer
STUP Consultant Pvt. Ltd.
Nagaon (Assam)

Rev.	Date	Description on Revisions
R2	JULY 2018	DESIGN UPDATED AS PER SITE CONDITION, SLIP ROAD ADDED, FO LOCATION SHIFTED
R1	Nov. 2017	Revised as per AE comment dated 09 Oct. 2017

Revisions

CLIENT:- NATIONAL HIGHWAYS & INFRASTRUCTURE DEVELOPMENT COPORATION LTD.

AUTHORITY'S ENGINEER: STUP Consultants P. Ltd & Ayoleeza Consultants P. Ltd.

AUTHORISED SIGNATORY | DATE

PROOF CHECKED CONSULTANT:- CETEST

AUTHORISED SIGNATORY | DATE

SAEFTY CONSULTANT:- Chaitanya Projects Consultancy Pvt. Ltd

AUTHORISED SIGNATORY | DATE

PROJECT: FOUR LANING OF NH-37 FROM RANGAGARA TO KALIABOR TINIALI (CH: 297.000 KM TO CH: 315.315 KM) IN NAGAON DISTRICT IN THE STATE OF ASSAM UNDER SARDP-NE, PHASE A ON EPC MODE

EPC CONTRACTOR:- SIMPLEX INFRASTRUCTURES LIMITED, 27, SHAKESPEARE SARANI, KOLKATA-17, INDIA

CONSULTANTS:- AECOM, 9th Floor, Infinity Tower C, DLF Cyber City, DLF Phase II, Gurgaon-122002, Haryana, India

DRAWN | DESIGN | CHECKED BY (Team Leader) | APPROVED BY (Deputy Director)

SCALE:- NTS

TITLE:- Vertical Report (RHS)

DRAWING NO.:- AECOM-DELD15159-DD-DWG-VER-001 (2 OF 2) | REV. R2

PLAN & PROFILE

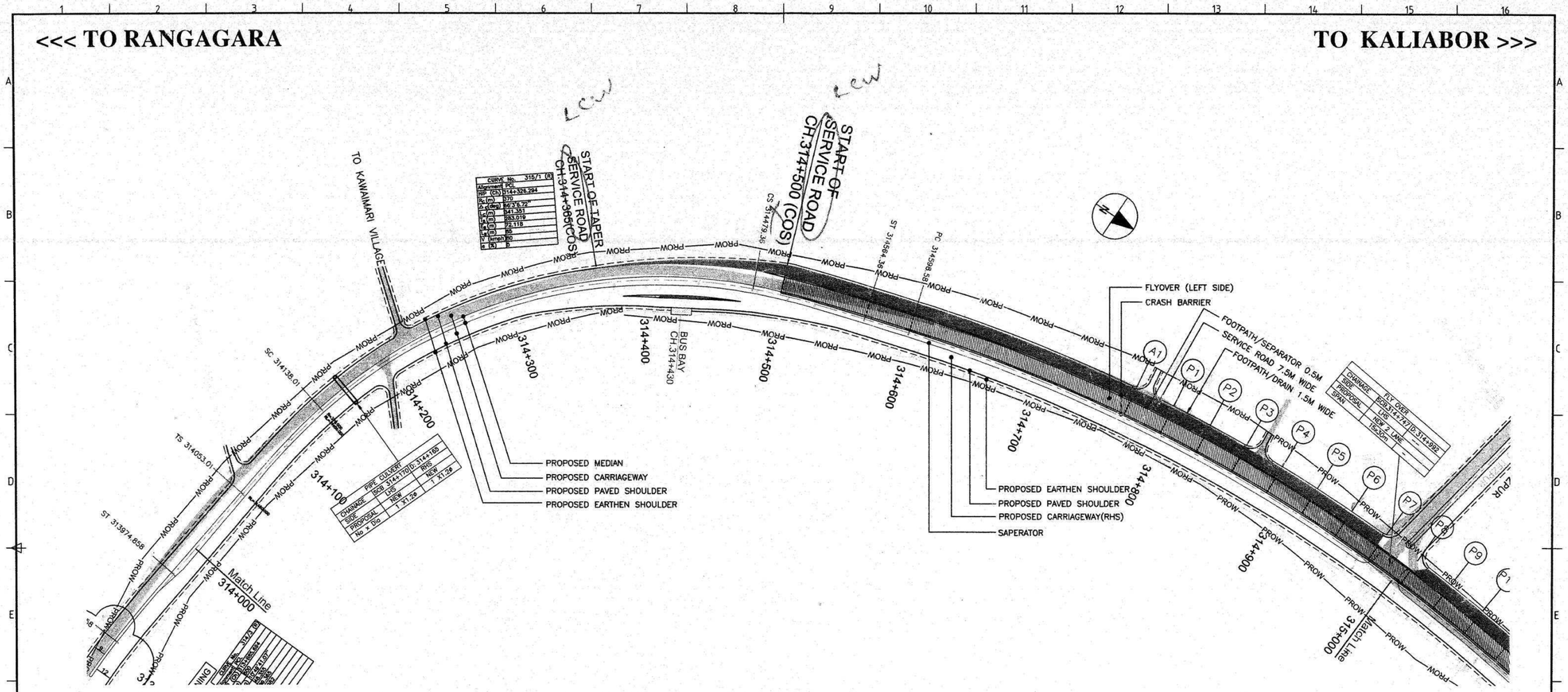

Team Leader
STUP Consultants Pvt. Ltd
Nagaon-782001 (Assam)

Resident Engineer
STUP Consultant Pvt. Ltd.
Nagaon-782001 (Assam)

NOTE:- 1. Work mentioned above under COS will be executed upon obtaining COS order from Authority.

2.* Pavement layers thickness in Partial Reconstruction area (Overlay Side) shall be as per detail Cross Section.

Rev.	Date	Description on Revisions
R2	JULY 2018	DESIGN UPDATED AS PER SITE CONDITION, SLIP ROAD ADDED, FO LOCATION SHIFTED
R1	Nov. 2017	Revised as per AE comment dated 09 Oct. 2017

Revisions

CLIENT:- NATIONAL HIGHWAYS & INFRASTRUCTURE DEVELOPMENT CORPORATION LTD.

AUTHORITY'S ENGINEER: STUP Consultants P. Ltd & Ayoleeza Consultants P. Ltd. — AUTHORISED SIGNATORY — DATE

PROOF CHECKED CONSULTANT:- CE TESTING Company Pvt. Ltd — AUTHORISED SIGNATORY — DATE 16/8/18

SAEFTY CONSULTANT:- Chaitanya Projects Consultancy Pvt. Ltd — AUTHORISED SIGNATORY — DATE

PROJECT: FOUR LANING OF NH-37 FROM RANGAGARA TO KALIABOR TINIALI (CH: 297.000 KM TO CH: 315.315 KM) IN NAGAON DISTRICT IN THE STATE OF ASSAM UNDER SARDP-NE, PHASE A ON EPC MODE

EPC CONTRACTOR:- SIMPLEX INFRASTRUCTURES LIMITED, 27, SHAKESPEARE SARANI, KOLKATA-17, INDIA

CONSULTANTS:- AECOM, 9th Floor, Infinity Tower F, DLF Cyber City, DLF Phase II, Gurgaon - 122002, Haryana, India — DRAWN | DESIGN | CHECKED BY | APPROVED BY

SCALE:- HOR- 1 : 2000, VER- 1 : 200

TITLE:- PLAN AND PROFILE FROM Km. 314+000 To Km. 315+000

DRAWING NO.:- AECOM-DELD15159-DD-DWG-PP- 0118 — REV. R2

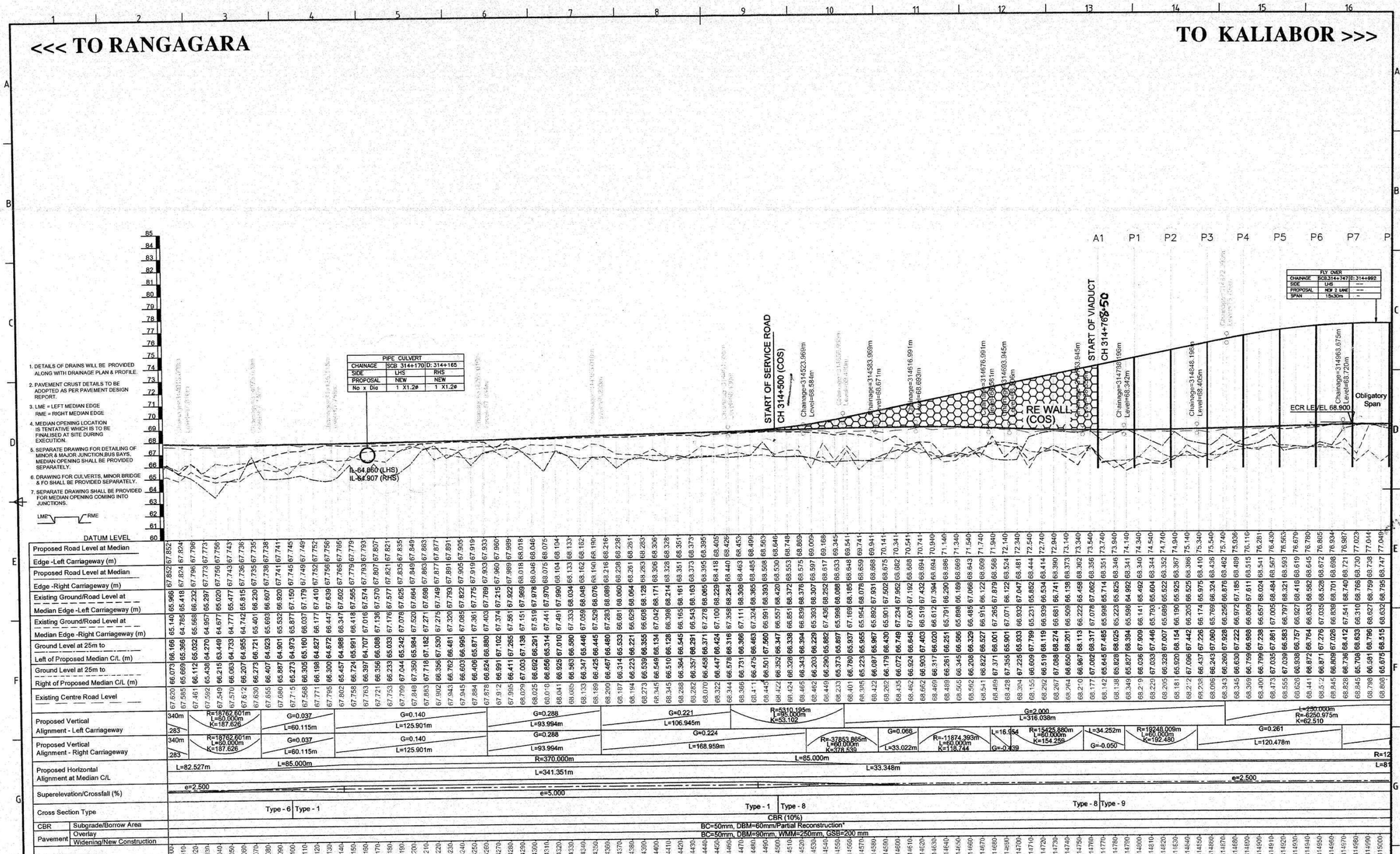

NOTE:- 1. Work mentioned above under COS will be executed upon obtaining COS order from Authority.

2.* Pavement layers thickness in Partial Reconstruction area (Overlay Side) shall be as per detail Cross Section.

Rev.	Date	Description on Revisions
R2	JULY 2018	DESIGN UPDATED AS PER SITE CONDITION, SLIP ROAD ADDED, FO LOCATION SHIFTED
R1	Nov. 2017	Revised as per AE comment dated 09 Oct. 2017

Revisions

CLIENT:- NATIONAL HIGHWAYS & INFRASTRUCTURE DEVELOPMENT CORPORATION LTD.

AUTHORITY'S ENGINEER: STUP Consultants P. Ltd & Ayoleeza Consultants P. Ltd.

AUTHORISED SIGNATORY | DATE

PROOF CHECKED CONSULTANT: CE TESTING Company Pvt. Ltd

AUTHORISED SIGNATORY | DATE

SAEFTY CONSULTANT:- Chaitanya Projects Consultancy Pvt. Ltd

AUTHORISED SIGNATORY | DATE

PROJECT: FOUR LANING OF NH-37 FROM RANGAGARA TO KALIABOR TINIALI (CH: 297.000 KM TO CH: 315.315 KM) IN NAGAON DISTRICT IN THE STATE OF ASSAM UNDER SARDP-NE, PHASE A ON EPC MODE

EPC CONTRACTOR:- SIMPLEX INFRASTRUCTURES LIMITED 27, SHAKESPEARE SARANI, KOLKATA-17, INDIA

CONSULTANTS:- AECOM 9th Floor, Infinity Tower C DLF Cyber City DLF Phase II, Gurgaon-122002, Haryana, India

DRAWN | DESIGN | CHECKED BY | APPROVED BY

SCALE:- HOR- 1 : 2000 VER- 1 : 200

TITLE:- PLAN AND PROFILE FROM Km. 314+000 To Km. 315+000

DRAWING NO.:- AECOM-DELD15159-DD-DWG-PP- 0118A

REV. R2

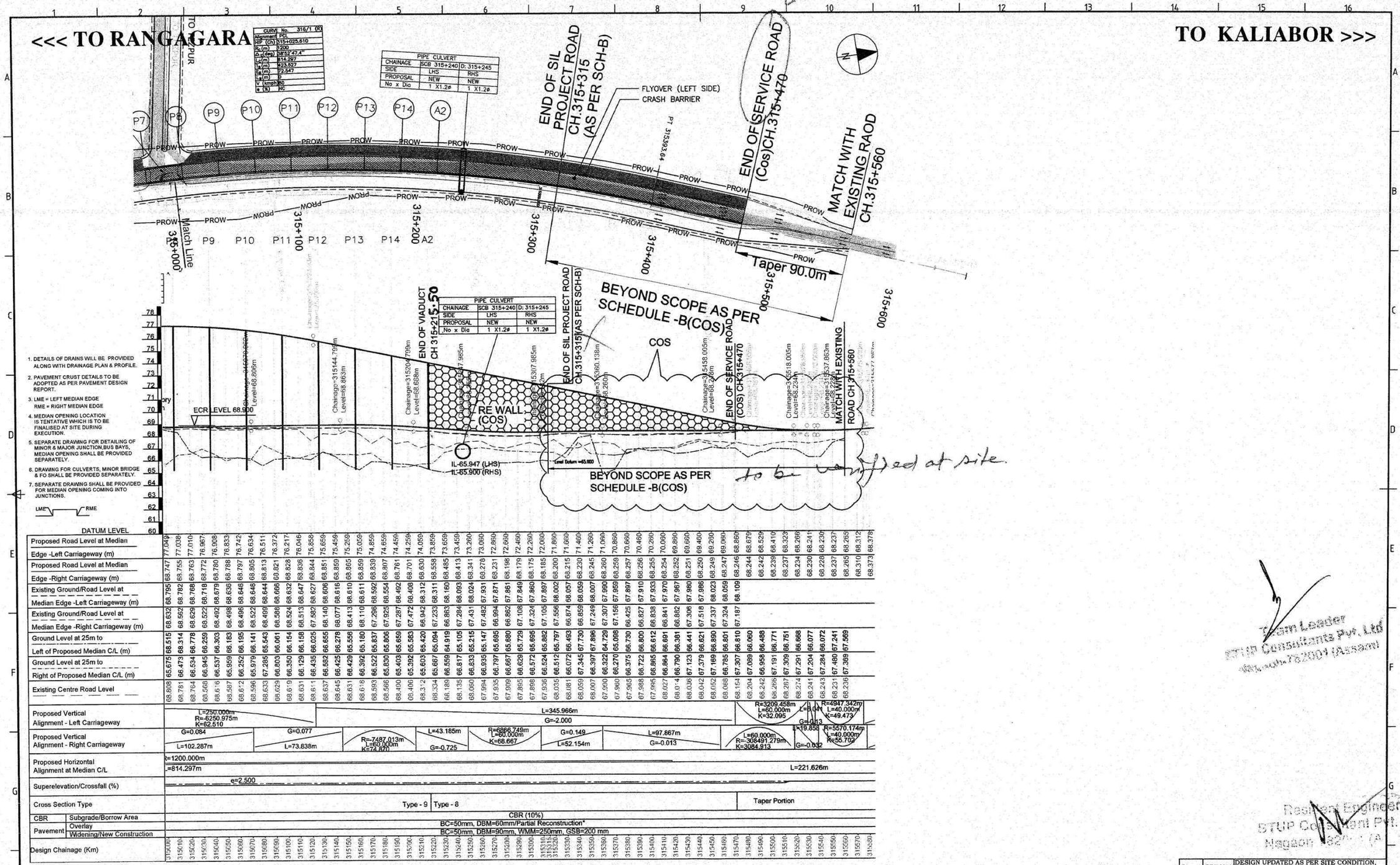

Team Leader
STUP Consultants Pvt. Ltd
Nagaon-782004 (Assam)

Resident Engineer
STUP Consultants Pvt. Ltd.
Nagaon-782004 (Assam)

NOTE:- 1. Work mentioned above under COS will be executed upon obtaining COS order from Authority.

2.* Pavement layers thickness in Partial Reconstruction area (Overlay Side) shall be as per detail Cross Section.

Rev.	Date	Description on Revisions
R2	JULY 2018	DESIGN UPDATED AS PER SITE CONDITION, SLIP ROAD ADDED, FO LOCATION SHIFTED
R1	Nov. 2017	Revised as per AE comment dated 09 Oct. 2017

Revisions

CLIENT:- NATIONAL HIGHWAYS & INFRASTRUCTURE DEVELOPMENT CORPORATION LTD.

AUTHORITY'S ENGINEER: STUP Consultants P. Ltd & Ayoleeza Consultants P. Ltd. — AUTHORISED SIGNATORY — DATE

PROOF CHECKED CONSULTANT:- CE TESTING Company Pvt. Ltd — AUTHORISED SIGNATORY — DATE

SAEFTY CONSULTANT:- Chaitanya Projects Consultancy Pvt. Ltd — AUTHORISED SIGNATORY — DATE

PROJECT: FOUR LANING OF NH-37 FROM RANGAGARA TO KALIABOR TINIALI (CH: 297.000 KM TO CH: 315.315 KM) IN NAGAON DISTRICT IN THE STATE OF ASSAM UNDER SARDP-NE, PHASE A ON EPC MODE

EPC CONTRACTOR:- SIMPLEX INFRASTRUCTURES LIMITED, 27, SHAKESPEARE SARANI, KOLKATA-17, INDIA

CONSULTANTS:- AECOM, 9th Floor, Infinity Tower C, DLF Cyber City, DLF Phase II, Gurgaon-122002, Haryana, India — DRAWN — DESIGN — CHECKED BY (Team Leader) — APPROVED BY (Design Leader)

SCALE:- HOR- 1 : 2000, VER- 1 : 200

TITLE:- PLAN AND PROFILE FROM Km. 315+000 To Km. 315+315

DRAWING NO.:- AECOM-DELD15159-DD-DWG-PP- 0119 — REV. R2

SERVICE ROAD

LCW.

VERTICAL ALIGNMENT REPORT (SERVICE ROAD) - LHS

Location	IP			Element Type	Curve Type	Length of Grade/Curve	Start		End		Gradient			K Value
	No.	IP Chainage	IP Level				Curve Start Chainage	Curve Start Level	Curve End Chainage	Curve End Level	In	Out	Difference	
KM 314+500 to KM 315+470	1	314+520.000	69.194	Curve	Hog	40.000	314+500.000	69.194	314+540.000	68.915		-1.397		28.635
				Grade		12.402	314+540.000	68.915	314+552.402	68.741				
	2	314+572.402	68.462	Curve	Sag	40.000	314+552.402	68.741	314+592.402	68.485	-1.397	0.117	1.514	26.422
				Grade		32.042	314+592.402	68.485	314+624.444	68.523				
	3	314+654.444	68.558	Curve	Hog	60.000	314+624.444	68.523	314+684.444	68.45	0.117	-0.360	-0.477	125.850
				Grade		55.571	314+684.444	68.45	314+740.016	68.25				
	4	314+760.000	68.178	Curve	Sag	39.969	314+740.015	68.250	314+779.985	68.194	-0.360	0.077	0.437	91.605
				Grade		37.156	314+779.985	68.194	314+817.141	68.222				
	5	314+847.141	68.245	Curve	Sag	60.000	314+817.141	68.222	314+877.141	68.397	0.077	0.507	0.430	139.440
				Grade		84.859	314+877.141	68.397	314+962.000	68.827				
	6	314+992.000	68.979	Curve	Hog	60.000	314+962.000	68.827	315+022.000	68.83	0.507	-0.497	-1.004	59.744
				Grade		14.636	315+022.000	68.83	315+036.636	68.757				
	7	315+066.636	68.608	Curve	Sag	60.000	315+036.636	68.757	315+096.636	68.618	-0.497	0.034	0.531	112.837
				Grade		39.921	315+096.636	68.618	315+136.557	68.632				
	8	315+136.557	68.632								0.034	-0.075		
				Grade		19.598	315+136.557	68.632	315+156.155	68.617				
	9	315+176.138	68.602	Curve	Hog	39.966	315+156.155	68.617	315+196.121	68.422	-0.075	-0.901	-0.826	48.428
				Grade		11.066	315+196.121	68.422	315+207.187	68.322				
	10	315+227.187	68.142	Curve	Sag	40.000	315+207.187	68.322	315+247.187	68.039	-0.901	-0.519	0.382	104.777
				Grade		12.659	315+247.187	68.039	315+259.846	67.973				
	11	315+279.846	67.869	Curve	Sag	40.000	315+259.846	67.973	315+299.846	67.948	-0.519	0.394	0.913	43.794
				Grade		8.634	315+299.846	67.948	315+308.480	67.982				
	12	315+328.480	68.061	Curve	Hog	40.000	315+308.480	67.982	315+348.480	68.056	0.394	-0.022	-0.416	95.934
				Grade		3.795	315+348.480	68.056	315+352.275	68.056				
	13	315+374.775	68.051	Curve	Hog	45.001	315+352.275	68.056	315+397.275	68.04	-0.022	-0.048	-0.026	1752.037
				Grade		1.925	315+397.276	68.04	315+399.201	68.039				
	14	315+414.201	68.032	Curve	Sag	30.000	315+399.201	68.039	315+429.201	68.246	-0.048	1.429	1.477	20.313
				Grade		0.799	315+429.201	68.246	315+430.000	68.257				
	15	315+450.000	68.543	Curve	Hog	40.000	315+430.000	68.257	315+470.000	68.543	1.429			27.997

Team Leader
STUP Consultants Pvt. Ltd.
Nagaon-782001 (Assam)

Resident Engineer
STUP Consultant Pvt. Ltd.
Nagaon-782001 (Assam)

Rev.	Date	Description on Revisions
R0	July 2018	First Submission

Revisions

CLIENT:- NATIONAL HIGHWAYS & INFRASTRUCTURE DEVELOPMENT COPORATION LTD.

AUTHORITY'S ENGINEER: STUP Consultants P. Ltd & Ayoleeza Consultants P. Ltd. — AUTHORISED SIGNATORY — DATE

PROOF CHECKED CONSULTANT:- CESTEST — AUTHORISED SIGNATORY — DATE

SAEFTY CONSULTANT:- Chaitanya Projects Consultancy Pvt. Ltd — AUTHORISED SIGNATORY — DATE

PROJECT: FOUR LANING OF NH-37 FROM RANGAGARA TO KALIABOR TINIALI (CH: 297.000 KM TO CH: 315.315 KM) IN NAGAON DISTRICT IN THE STATE OF ASSAM UNDER SARDP-NE, PHASE A ON EPC MODE

EPC CONTRACTOR:- SIMPLEX INFRASTRUCTURES LIMITED, 27, SHAKESPEARE SARANI, KOLKATA-17, INDIA

CONSULTANTS:- AECOM, 9th Floor, Infinity Tower C DLF Cyber City, DLF Phase II, Gurgaon-122002, Haryana, India — DRAWN | DESIGN | CHECKED BY (Team Leader) | APPROVED BY (Deputy Director)

SCALE:-

TITLE:- Vertical Report (LHS) KM 314+500 - KM 315+470

DRAWING NO.:- AECOM-DELD15159-DD-DWG-SR-VER-002 — REV. R0

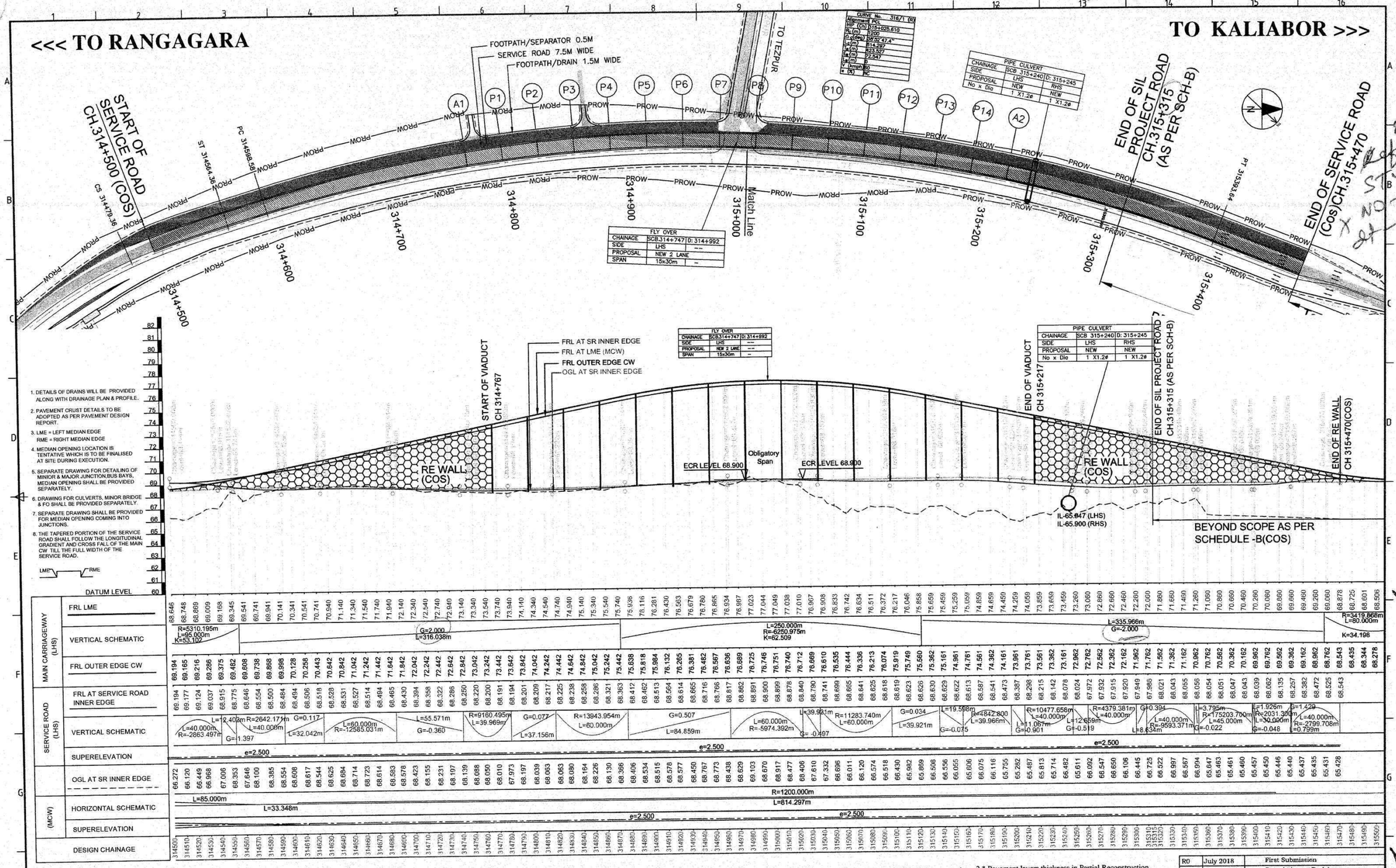

NOTE:- 1. Work mentioned above under COS will be executed upon obtaining COS order from Authority.

2.* Pavement layers thickness in Partial Reconstruction area (Overlay Side) shall be as per detail Cross Section.

Rev.	Date	Description on Revisions
R0	July 2018	First Submission

Revisions

CLIENT:- NATIONAL HIGHWAYS & INFRASTRUCTURE DEVELOPMENT CORPORATION LTD.

AUTHORITY'S ENGINEER: STUP Consultants P. Ltd & Ayoleeza Consultants P. Ltd.

PROOF CHECKED CONSULTANT: CE TESTING Company Pvt. Ltd

SAEFTY CONSULTANT:- Chaitanya Projects Consultancy Pvt. Ltd

PROJECT: FOUR LANING OF NH-37 FROM RANGAGARA TO KALIABOR TINIALI (CH: 297.000 KM TO CH: 315.315 KM) IN NAGAON DISTRICT IN THE STATE OF ASSAM UNDER SARDP-NE, PHASE A ON EPC MODE

EPC CONTRACTOR:- SIMPLEX INFRASTRUCTURES LIMITED, 27, SHAKESPEARE SARANI, KOLKATA-17, INDIA

CONSULTANTS:- AECOM, 9th Floor, Infinity Tower C DLF Cyber City, DLF Phase II, Gurgaon-122002, Haryana, India

DRAWN | DESIGN | CHECKED BY | APPROVED BY

SCALE:- HOR- 1 : 2000 VER- 1 : 200

TITLE:- SERVICE ROAD PLAN & PROFILE FROM Km. 314+500 To Km. 315+470 (LHS)

DRAWING NO.:- AECOM-DELD15159-DD-DWG-SR- 0209

REV. R0

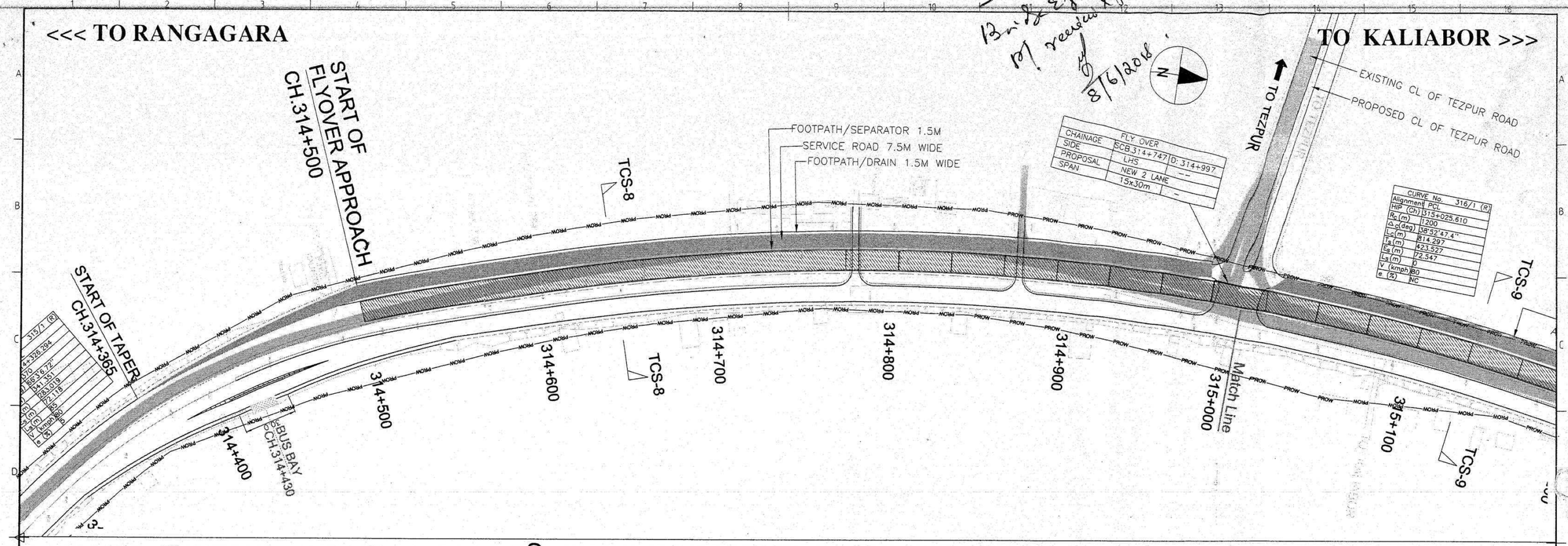

CHAINAGE	FLY OVER	
SIDE	SCB 314+747	D: 314+997
PROPOSAL	LHS	--
SPAN	NEW 2 LANE	
	15x30m	-

CURVE No.	315/1 (R)
Alignment	PCL
HIP (Ch)	314+326.294
R_c (m)	310
Δ_c (deg)	86°35'12"
L_c (m)	341.351
T_s (m)	283.019
E_s (m)	72.118
L_s (m)	65
V (kmph)	80
e (%)	5

CURVE No.	316/1 (R)
Alignment	PCL
HIP (Ch)	315+025.610
R_c (m)	1200
Δ_c (deg)	38°52'47.4"
L_c (m)	814.297
T_s (m)	423.527
E_s (m)	72.547
L_s (m)	0
V (kmph)	80
e (%)	NC

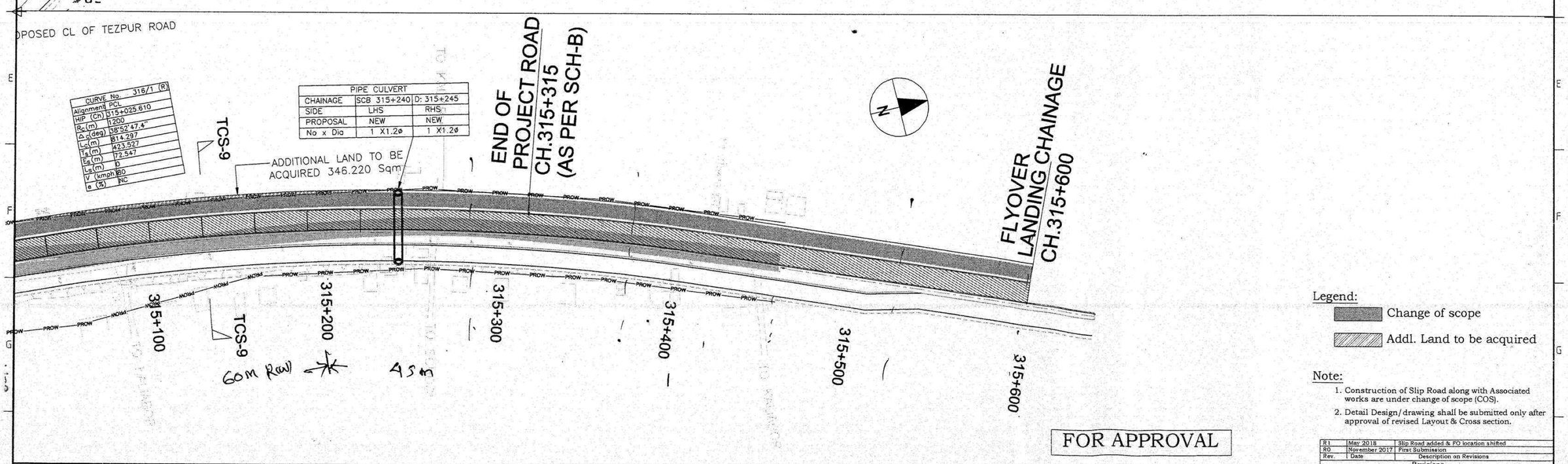

PIPE CULVERT		
CHAINAGE	SCB 315+240	D: 315+245
SIDE	LHS	RHS
PROPOSAL	NEW	NEW
No x Dia	1 X1.2ø	1 X1.2ø

Legend:

- Change of scope
- Addl. Land to be acquired

Note:

1. Construction of Slip Road along with Associated works are under change of scope (COS).
2. Detail Design/drawing shall be submitted only after approval of revised Layout & Cross section.

FOR APPROVAL

Rev.	Date	Description on Revisions
R1	May 2018	Slip Road added & FO location shifted
R0	November 2017	First Submission

Revisions

CLIENT:- NATIONAL HIGHWAYS & INFRASTRUCTURE DEVELOPMENT CORPORATION LTD.

AUTHORITY'S ENGINEER: STUP Consultants P. Ltd & Ayoleeza Consultants P. Ltd.

AUTHORISED SIGNATORY | DATE

PROOF CHECKED CONSULTANT:- CE TESTING Company Pvt. Ltd

AUTHORISED SIGNATORY | DATE

SAEFTY CONSULTANT:- Chaitanya Projects Consultancy Pvt. Ltd

AUTHORISED SIGNATORY | DATE

PROJECT: FOUR LANING OF NH-37 FROM RANGAGARA TO KALIABOR TINIALI (CH: 297.000 KM TO CH: 315.315 KM) IN NAGAON DISTRICT IN THE STATE OF ASSAM UNDER SARDP-NE, PHASE A ON EPC MODE

EPC CONTRACTOR:- SIMPLEX INFRASTRUCTURES LIMITED, 27, SHAKESPEARE SARANI, KOLKATA-17, INDIA

CONSULTANTS:- AECOM, 9th Floor, Infinity Tower C DLF Cyber City, DLF Phase II, Gurgaon-122002, Haryana, India

DRAWN	DESIGN	CHECKED BY (Team Leader)	APPROVED BY (Design Director)
		SL	MSR

SCALE:- NOT TO SCALE

TITLE:- ALIGNMENT PLAN AT FO LOCATION FROM KM 314+500 TO KM 315+315

DRAWING NO.:- AECOM-DELD15159-DD-DWG-AP-001

REV.

Draft Drawing

Urgent

Brief Engg / R E

pl revise & put up for comments finalization by Sunday

8/6/2018

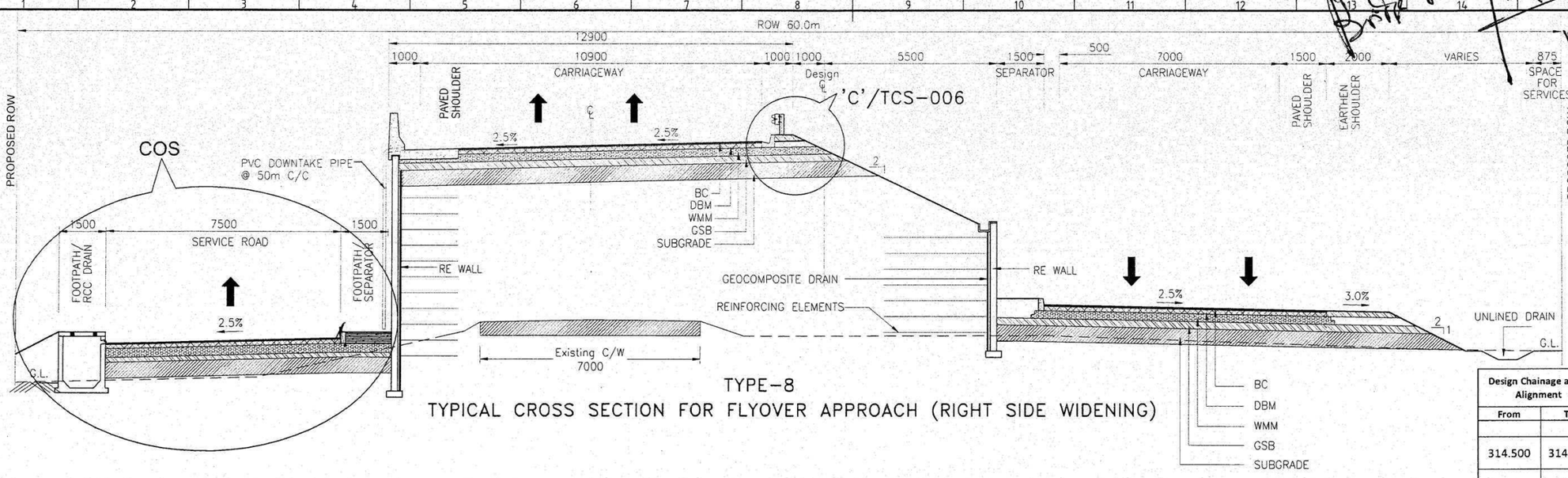

TYPE-8

TYPICAL CROSS SECTION FOR FLYOVER APPROACH (RIGHT SIDE WIDENING)

Design Chainage as per Alignment		Length (km)	Cross Section Type
From	To		
314.500	314.775	0.275	TYPE 8
315.225	315.315	0.090	TYPE 8

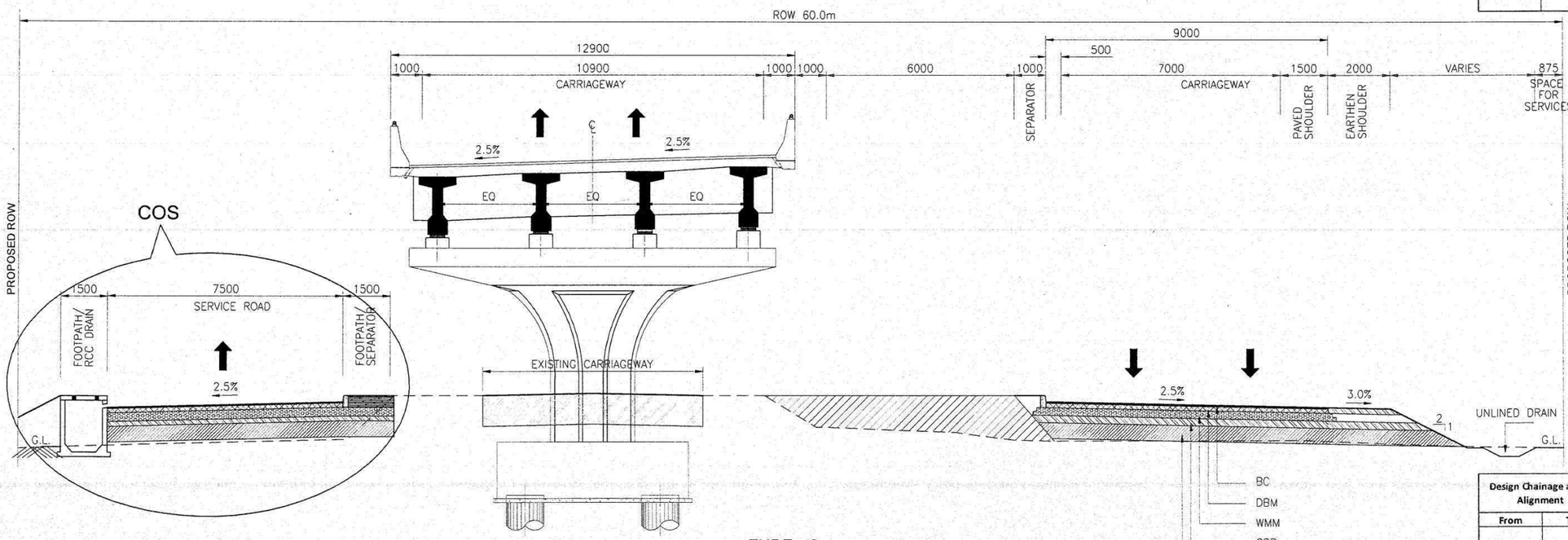

TYPE-9

TYPICAL CROSS SECTION FOR FLYOVER LOCATION (RIGHT SIDE WIDENING)

Design Chainage as per Alignment		Length (km)	Cross Section Type
From	To		
314.775	315.225	0.450	TYPE 9

Note:

1. Right of Way (ROW) as shown in TCS is meant to indicate proposed cross section of highway shall be accommodated within ROW.
2. Actual Right of Way (ROW) has marked in Alignment Plan based on data provided by AE vide letter ref: STUP / NH 37 / SIL / 2017 /01 dated 9 Feb 2017 and site meeting on 15 Feb 2017.
3. Construction of Slip Road along with Associated works are under change of scope (COS).

FOR APPROVAL

Rev.	Date	Description on Revisions
R1	May 2018	Slip Road added & FO location shifted
R0	November 2017	First Submission

Revisions

CLIENT:- NATIONAL HIGHWAYS & INFRASTRUCTURE DEVELOPMENT CORPORATION LTD.

AUTHORITY'S ENGINEER: STUP Consultants P. Ltd & Ayoleeza Consultants P. Ltd.

PROOF CHECKED CONSULTANT:- CE TESTING Company Pvt. Ltd

SAFETY CONSULTANT:- Chaitanya Projects Consultancy Pvt. Ltd

PROJECT: FOUR LANING OF NH-37 FROM RANGAGARA TO KALIABOR TINIALI (CH: 297.000 KM TO CH: 315.315 KM) IN NAGAON DISTRICT IN THE STATE OF ASSAM UNDER SARDP-NE, PHASE A ON EPC MODE

EPC CONTRACTOR:- SIMPLEX INFRASTRUCTURES LIMITED, 27, SHAKESPEARE SARANI, KOLKATA-17, INDIA

CONSULTANTS:- AECOM, 9th Floor, Infinity Tower C DLF Cyber City, DLF Phase II, Gurgaon-122002, Haryana, India

SCALE:- 1 : 1000

TITLE:- TYPICAL CROSS SECTION

AUTHORISED SIGNATORY	DATE	AUTHORISED SIGNATORY	DATE	AUTHORISED SIGNATORY	DATE

DRAWN	DESIGN	CHECKED BY (Team Leader)	APPROVED BY (Design Director)
		SL	MSR

DRAWING NO.:- AECOM-DELD15159-DD-DWG-TCS- 005

REV. R1

NATIONAL HIGHWAYS & INFRASTRUCTURE DEVELOPMENT CORPORATION LTD.

Four Laning of NH – 37 from Rangagara to Kaliabor Tiniali (Ch: 297.000 Km to Ch: 315.315 Km of NH-37) in Nagaon District in the State of Assam under SARDP – NE, Phase A, on EPC Basis

Simplex

Box Culvert General Arrangement

Approved

Letter no. 23, 05.12.17
Approval. 38, 09.02.18

BOX CULVERT DRAWINGS

(AT DESIGN CH.299+230, 300+594, 301+060, 302+992, 306+480)

CONTRACTOR:-

SIMPLEX INFRASTRUCTURES LIMITED

AUTHORITY'S ENGINEER:-

STUP Consultants P.Ltd
&
Ayoleeza Consultants P.Ltd

CONSULTANTS:-

AECOM
AECOM India Private Limited

NOVEMBER 2017

NATIONAL HIGHWAYS & INFRASTRUCTURE DEVELOPMENT CORPORATION LTD.

Four Laning of NH – 37 from Rangagara to Kaliabor Tiniali (Ch: 297.000 Km to Ch: 315.315 Km of NH-37) in Nagaon District in the State of Assam under SARDP – NE, Phase A, on EPC Basis

Simplex
Box Culvert
General Arrangement
Approved

Letter no. 23, 05.12.17
Approval. 38, 09.02.18

BOX CULVERT DRAWINGS

(AT DESIGN CH.299+230, 300+594, 301+060, 302+992, 306+480)

CONTRACTOR:-

SIMPLEX INFRASTRUCTURES LIMITED

AUTHORITY'S ENGINEER:-

STUP Consultants P.Ltd
&
Ayoleeza Consultants P.Ltd

CONSULTANTS:-

AECOM
AECOM India Private Limited

NOVEMBER 2017

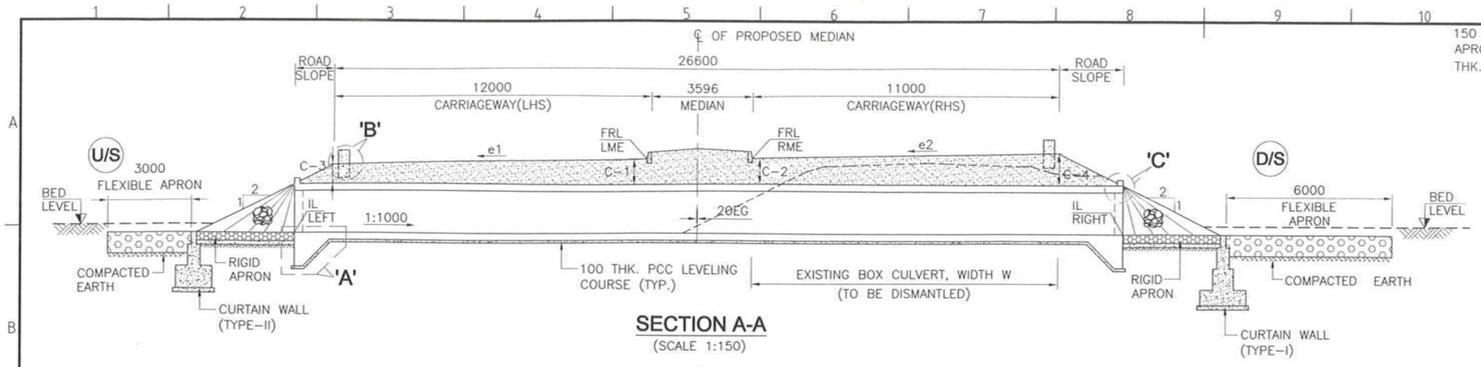

SECTION A-A
(SCALE 1:150)

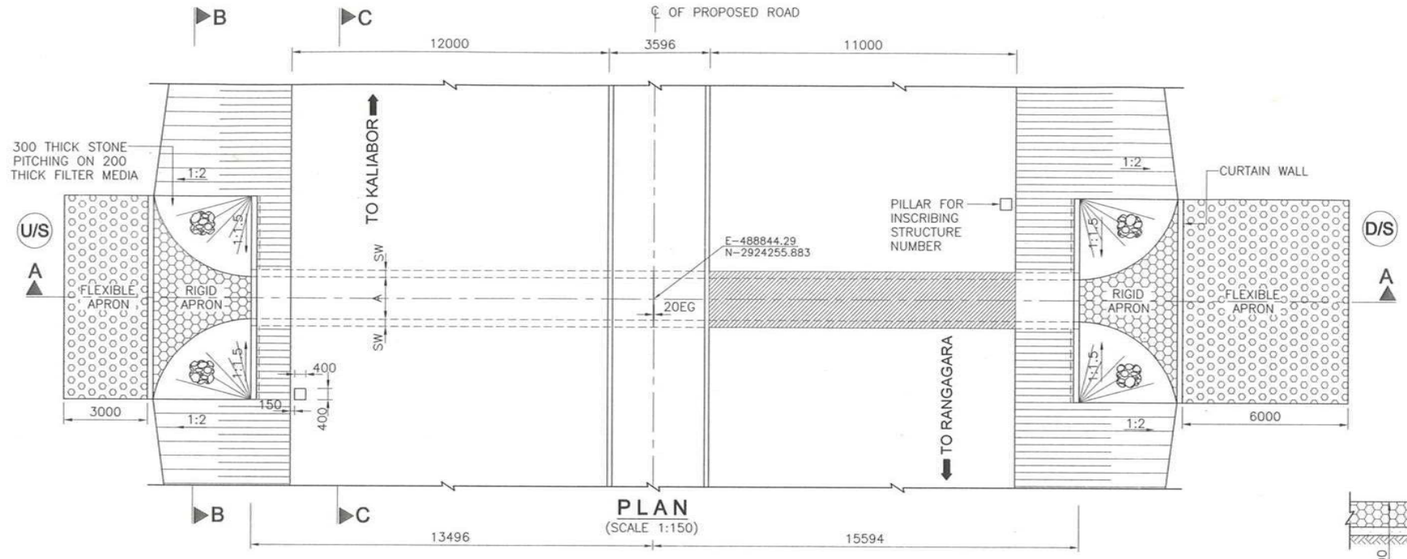

PLAN
(SCALE 1:150)

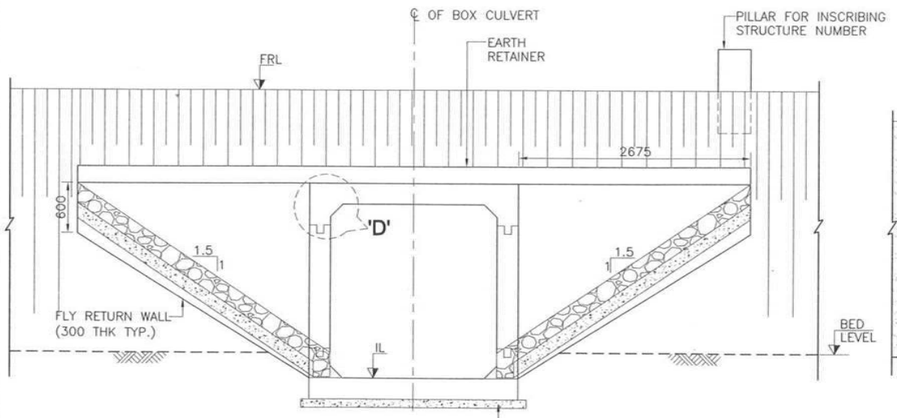

SECTION B-B
(SCALE 1:50)

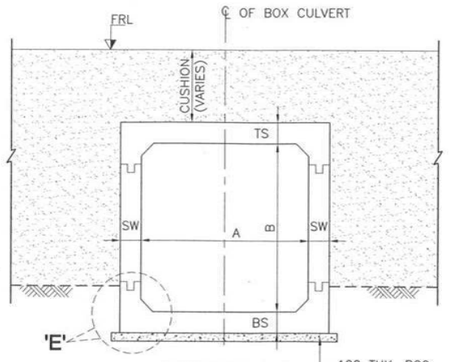

SECTION C-C
(SCALE 1:50)

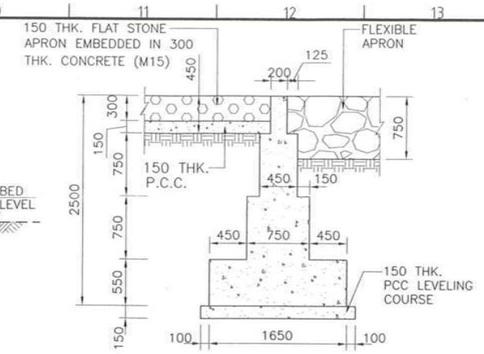

DETAILS OF PCC CURTAIN WALL TYPE-I
(SCALE 1:50)

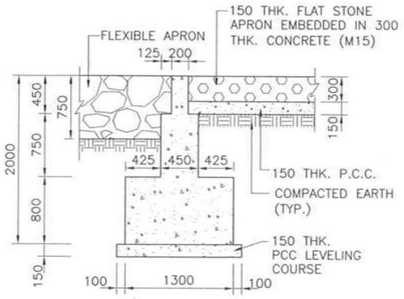

DETAILS OF PCC CURTAIN WALL TYPE-II
(SCALE 1:50)

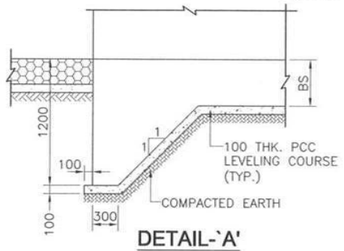

DETAIL-`A'
(SCALE 1:50)

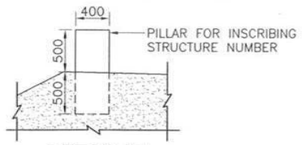

DETAIL-`B'
(SCALE 1:50)

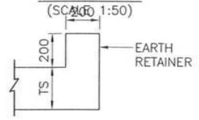

DETAIL-`C'
(SCALE 1:25)

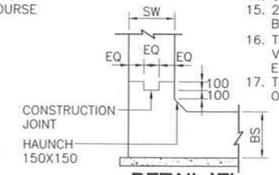

DETAIL-`E'
(SCALE 1:50)

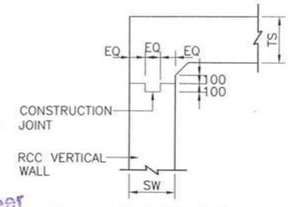

DETAIL-`D'
(SCALE 1:50)

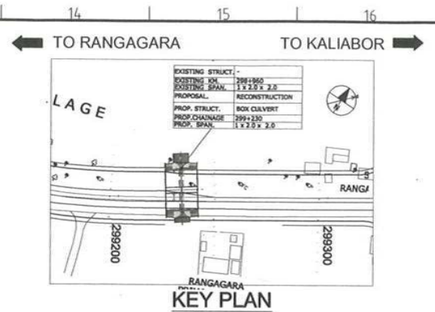

KEY PLAN

NOTES:-

1. ALL DIMENSIONS ARE IN MILLIMETERS, LEVELS ARE IN METERS UNLESS OTHERWISE MENTIONED.
2. NO DIMENSION SHALL BE MEASURED FROM THE DRAWINGS. ONLY WRITTEN DIMENSIONS SHALL BE FOLLOWED.
3. THE DRAWING SHALL BE READ IN CONJUNCTION WITH RELEVANT HIGHWAY PLAN AND PROFILE DRAWINGS. FRL, BED LEVEL, CAMBER/SUPERELEVATION AND LAYOUT SHALL ALSO BE VERIFIED AT SITE BEFORE EXECUTION. DISCEPANCIES SHALL BE BROUGHT TO THE NOTICE OF THE ENGINEER FOR REVISION IN DRAWINGS, IF ANY.
4. CHAINAGE OF THE STRUCTURE IS AT THE CENTER LINE OF THE PROPOSED STRUCTURE.
5. THE REINFORCEMENT SHALL BE HYSD BARS OF GRADE DESIGNATION Fe 500D CONFORMING TO IS 1786-2008 & IRC 112-2011.
6. CONCRETE SHALL BE DESIGN MIX WITH A MINIMUM 28 DAYS CHARACTERISTIC CUBE STRENGTH FOR DIFFERENT ELEMENTS AS FOLLOWS:
   - a.RCC BOX STRUCTURE – M30
   - b.PCC LEVELING COURSE – M15
   - c.RCC FLY RETURN WALL – M30
   - d.PCC CURTAIN WALL – M20
7. CLEAR COVER TO OUTER STEEL SHALL BE AS FOLLOWS:-
   - a.SUPERSTRUCTURE 40MM
   - b.VERTICAL FACE IN CONTACT WITH EARTH 75MM
   - c.VERTICAL FACE NOT IN CONTACT WITH EARTH 40MM
   - d.FOUNDATION 75MM
8. BACK FILLING BEHIND WALLS/ABUTMENT SHALL CONSISTS OF SELECTED EARTH CONFORMING TO APPENDIX 6 OF IRC:78-2014 HAVING PROPERTIES C=0, ϕ>=30°, γ=2.0t/cu.m.
9. FORMATION LEVEL SHOWN IS AT MEDIAN EDGE.
10. THE STRUCTURE HAS BEEN DESIGNED FOR LIVE LOAD COMBINATIONS CONFORMING TO IRC: 6-2014.
11. THE TOP OF BOTTOM RAFT SHALL BE KEPT MIN. 300MM BELOW LOWEST BED LEVEL. HOWEVER, CHANGE IN CLEAR HEIGHT OF RCC BOX SHALL NOT BE MORE THAN 500MM.
12. ALL SOLID WALLS RETAINING THE EARTH SHALL BE PROVIDED WITH WEEP HOLES (100MM DIA AND SLOPE 1V:20H) STARTING 150MM ABOVE THE GROUND LEVEL AND SPACED 1000MM C/C BOTH HORIZONTALLY AND VERTICALLY IN STAGGERED MANNER.
13. 600MM THICK FILTER MEDIA SHALL BE PROVIDED BEHIND SOLID ABUTMENT WALL & RETURN WALL.
14. CONDITION OF EXPOSURE IS MODERATE.
15. 20MM EXPANSION GAP FILLED WITH COMPRESSIBLE FIBER BOARD SHALL BE PROVIDED BETWEEN ADJACENT RCC BOXES.
16. THE SAFE BEARING CAPACITY AS PER DESIGN IS 8.39t/M². ANY VARIATION ON SITE SHOULD BE INFORMED TO THE DESIGN ENGINEER FOR NECESSARY ACTION.
17. THE LENGTH OF RIGID APRON SHALL BE AS PER ARTICLE 20 OF IRC:SP:13-2004.

LEGEND:-

FRL	–	FINISHED ROAD LEVEL
BL.	–	BED LEVEL
GL.	–	GROUND LEVEL
IL	–	INVERT LEVEL
EG	–	EXPANSION GAP
LOE	–	LEFT OUTER EDGE
ROE	–	RIGHT OUTER EDGE
LME	–	LEFT MEDIAN EDGE
RME	–	RIGHT MEDIAN EDGE
THK	–	THICKNESS
U/S	–	UPSTREAM
D/S	–	DOWNSTREAM

REFERENCE DRAWINGS.:-

1. REINFORCEMENT DETAILS FOR CULVERTS AECOM-DELD15159-DD-DWG-BC-01
2. MISCELLANEOUS DWGS. AECOM-DELD15159-MISC-01

AP Saha
Design Director
(AECOM)

SCHEDULE OF BOX CULVERT

S.No.	EXISTING KM.	DESIGN CH.	EXISTING SPAN (NOS. x C/C OF EXP.)	EXISTING CULVERT	EXISTING WIDTH,W (m)	SKEW	PROPOSAL	PROPOSED STRUCTURE	PROPOSED SPAN (NOS. x L)	FRL		CAMBER/ SUPERELEVATION		BED LEVEL		INVERT LEVEL		TCS	FLOW OF DIRECTION	CUSHION (m)				RCC BOX DIMENSIONS (m)					BARREL LENGTH OF BOX (m)	REINFORCEMENT CATEGORY (REFER REINF. DRAWING)
										LME	RME	LEFT (e1)	RIGHT (e2)	LEFT	RIGHT	LEFT	RIGHT			LOE (C-3)	LME (C-1)	RME (C-2)	ROE (C-4)	A	B	TS	BS	SW		
1	298+960	299+230	1 x 2.0 x 2.0	BOX CULVERT	11	0	RECONSTRUCTION	BOX CULVERT	1 x 2.0 x2.0	65.491	65.491	-4.74	4.74	62.873	62.838	62.573	62.615	TYPE-5	L-R	0.099	0.655	0.639	1.148	2.000	2.000	0.250	0.300	0.250	29.090	2B

Rev.	Date	Description on Revisions
R1	22 Nov.2017	P&P REVISED
R0	SEPT. 2017	FIRST SUBMISSION

Revisions

CLIENT:- NATIONAL HIGHWAYS & INFRASTRUCTURE (Development Coporation Ltd)

AUTHORITY'S ENGINEER: STUP Consultants P. Ltd & Ayoleeza Consultants P. Ltd — AUTHORISED SIGNATORY — DATE

PROOF CHECKED CONSULTANT:- CE TESTING Company Pvt. Ltd — AUTHORISED SIGNATORY — DATE 5/12/17

SAEFTY CONSULTANT:- Chaitanya Projects Consultancy Pvt. Ltd — AUTHORISED SIGNATORY — DATE

PROJECT: FOUR LANING OF NH-37 FROM RANGAGARA TO KALIABOR TINIALI (CH: 297.000 KM TO CH: 315.315 KM) IN NAGAON DISTRICT IN THE STATE OF ASSAM UNDER SARDP-NE, PHASE A ON EPC MODE

EPC CONTRACTOR:- SIMPLEX INFRASTRUCTURES LIMITED, 27, SHAKESPEARE SARANI, KOLKATA-17, INDIA

CONSULTANTS:- AECOM, 9th Floor, Infinity Tower C, DLF Cyber City, DLF Phase II, Gurgaon-122002, Haryana, India

R. BENIWAL	S. YADAV	S.P. SINGH	S. RASTOGI
DRAWN	DESIGN	CHECKED BY	APPROVED BY

SCALE:- 1 : 1000

TITLE:- GENERAL ARRANGEMENT DRAWING FOR RCC BOX CULVERT AT CH. 299+230 (SCH. CH. 298+960)

DRAWING NO.:- AECOM-DELD15159-DD-DWG-BC-299+230-GAD-01 — REV. R1

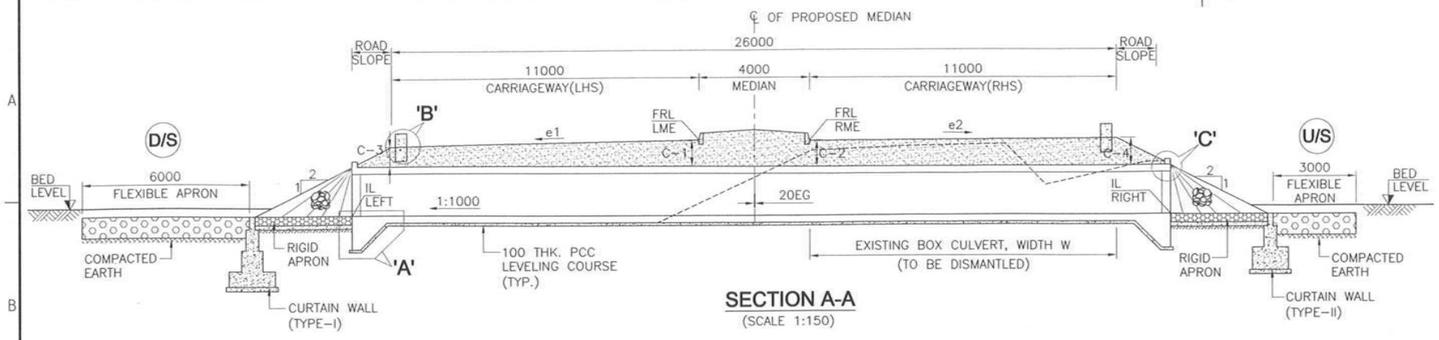

SECTION A-A
(SCALE 1:150)

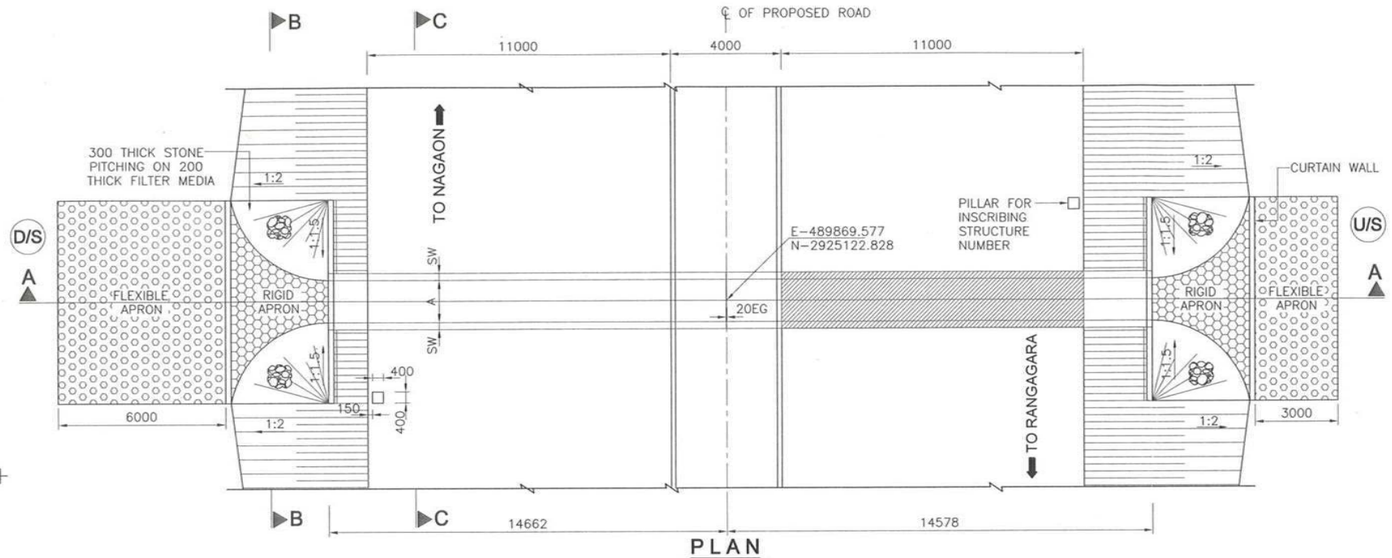

PLAN
(SCALE 1:150)

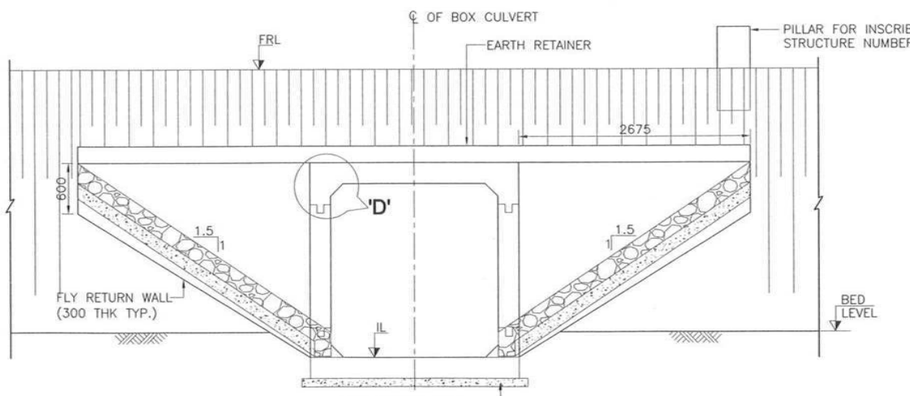

SECTION B-B
(SCALE 1:50)

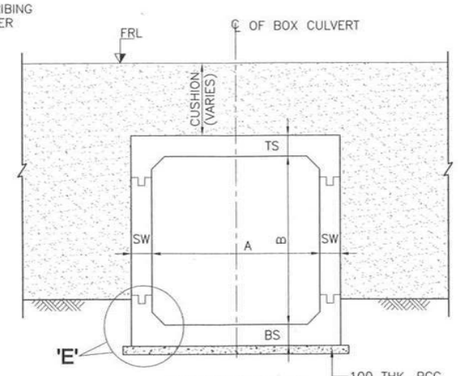

SECTION C-C
(SCALE 1:50)

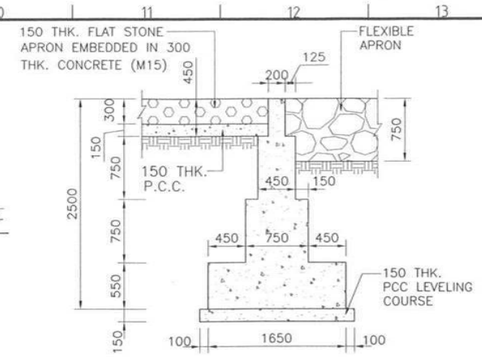

DETAILS OF PCC CURTAIN WALL TYPE-I
(SCALE 1:50)

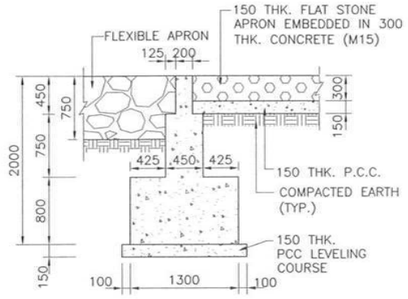

DETAILS OF PCC CURTAIN WALL TYPE-II
(SCALE 1:50)

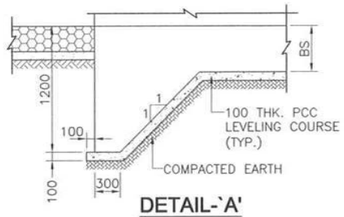

DETAIL-`A'
(SCALE 1:50)

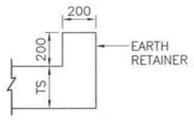

DETAIL-`C'
(SCALE 1:25)

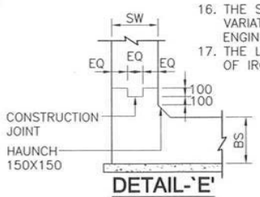

DETAIL-`E'
(SCALE 1:50)

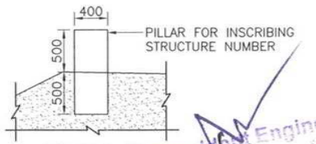

DETAIL-`B'
(SCALE 1:50)

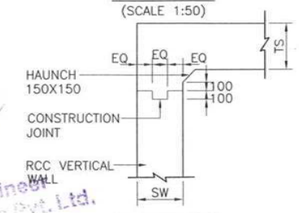

DETAIL-`D'
(SCALE 1:50)

Resident Engineer
STUP Consultants Pvt. Ltd.
Nagaon, Assam

TO RANGAGARA ⬅ ➡ TO NAGAON

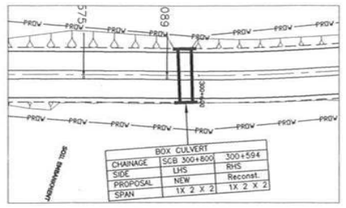

KEY PLAN

NOTES:-

1. ALL DIMENSIONS ARE IN MILLIMETERS, LEVELS ARE IN METERS UNLESS OTHERWISE MENTIONED.
2. NO DIMENSION SHALL BE MEASURED FROM THE DRAWINGS. ONLY WRITTEN DIMENSIONS SHALL BE FOLLOWED.
3. THE DRAWING SHALL BE READ IN CONJUNCTION WITH RELEVANT HIGHWAY PLAN AND PROFILE DRAWINGS. FRL, BED LEVEL, CAMBER/SUPERELEVATION AND LAYOUT SHALL ALSO BE VERIFIED AT SITE BEFORE EXECUTION. DISCEPANCIES SHALL BE BROUGHT TO THE NOTICE OF THE ENGINEER FOR REVISION IN DRAWINGS, IF ANY.
4. CHAINAGE OF THE STRUCTURE IS AT THE CENTER LINE OF THE PROPOSED STRUCTURE.
5. THE REINFORCEMENT SHALL BE HYSD BARS OF GRADE DESIGNATION Fe 500D CONFORMING TO IS 1786-2008 & IRC 112-2011.
6. CONCRETE SHALL BE DESIGN MIX WITH A MINIMUM 28 DAYS CHARACTERISTIC CUBE STRENGTH FOR DIFFERENT ELEMENTS AS FOLLOWS:
   a. RCC BOX STRUCTURE – M30
   b. PCC LEVELING COURSE – M15
   c. RCC FLY RETURN WALL – M30
   d. PCC CURTAIN WALL – M20
7. CLEAR COVER TO OUTER STEEL SHALL BE AS FOLLOWS:-
   a. SUPERSTRUCTURE 40MM
   b. VERTICAL FACE IN CONTACT WITH EARTH 75MM
   c. VERTICAL FACE NOT IN CONTACT WITH EARTH 40MM
   d. FOUNDATION 75MM
8. BACK FILLING BEHIND WALLS/ABUTMENT SHALL CONSISTS OF SELECTED EARTH CONFORMING TO APPENDIX 6 OF IRC:78-2014 HAVING PROPERTIES C=0, ϕ>=30°, γ=2.0t/cu.m.
9. FORMATION LEVEL SHOWN IS AT MEDIAN EDGE.
10. THE STRUCTURE HAS BEEN DESIGNED FOR LIVE LOAD COMBINATIONS CONFORMING TO IRC: 6-2014.
11. THE TOP OF BOTTOM RAFT SHALL BE KEPT MIN. 300MM BELOW LOWEST BED LEVEL. HOWEVER, CHANGE IN CLEAR HEIGHT OF RCC BOX SHALL NOT BE MORE THAN 500MM.
12. ALL SOLID WALLS RETAINING THE EARTH SHALL BE PROVIDED WITH WEEP HOLES (100MM DIA AND SLOPE 1V:20H) STARTING 150MM ABOVE THE GROUND LEVEL AND SPACED 1000MM C/C BOTH HORIZONTALLY AND VERTICALLY IN STAGGERED MANNER.
13. 600MM THICK FILTER MEDIA SHALL BE PROVIDED BEHIND SOLID ABUTMENT WALL & RETURN WALL.
14. CONDITION OF EXPOSURE IS MODERATE.
15. 20MM EXPANSION GAP FILLED WITH COMPRESSIBLE FIBER BOARD SHALL BE PROVIDED BETWEEN ADJACENT RCC BOXES.
16. THE SAFE BEARING CAPACITY AS PER DESIGN IS 8.39t/M². ANY VARIATION ON SITE SHOULD BE INFORMED TO THE DESIGN ENGINEER FOR NECESSARY ACTION.
17. THE LENGTH OF RIGID APRON SHALL BE AS PER ARTICLE 20 OF IRC:SP:13-2004.

LEGEND:-

FRL	–	FINISHED ROAD LEVEL
BL.	–	BED LEVEL
GL.	–	GROUND LEVEL
IL	–	INVERT LEVEL
EG	–	EXPANSION GAP
LOE	–	LEFT OUTER EDGE
ROE	–	RIGHT OUTER EDGE
LME	–	LEFT MEDIAN EDGE
RME	–	RIGHT MEDIAN EDGE
THK	–	THICKNESS
U/S	–	UPSTREAM
D/S	–	DOWNSTREAM

REFERENCE DRAWINGS.:-

1. REINFORCEMENT DETAILS FOR CULVERTS. AECOM-DELD15159-DD-DWG-BC-REINF.-01
2. MISCELLANEOUS DWGS. AECOM-DELD15159-MISC-01

AP Saha
Design Director
(AECOM)

SCHEDULE OF BOX CULVERT

S.No.	EXISTING KM.	DESIGN CH.	SPAN x HT	EXISTING CULVERT	EXISTING WIDTH,W (m)	SKEW	PROPOSAL	PROPOSED STRUCTURE	PROPOSED SPAN (NOS. x L)	FRL		CAMBER/ SUPERELEVATION		BED LEVEL		INVERT LEVEL		TCS	FLOW OF DIRECTION	CUSHION (m)				RCC BOX DIMENSIONS (m)					BARREL LENGTH OF BOX (m)	REINFORCEMENT CATEGORY (REFER REINF. DRAWING)
										LME	RME	LEFT (e1)	RIGHT (e2)	LEFT	RIGHT	LEFT	RIGHT			LOE (C-3)	LME (C-1)	RME (C-2)	ROE (C-4)	A	B	TS	BS	SW		
1	300+800	300+594	1 x 2.0 x 2.0	BOX CULVERT	11.0	0	RECONSTRUCTION	BOX CULVERT	1 x 2.0 x2.0	65.940	65.940	-2.5	-2.5	62.96	63.077	62.584	62.626	TYPE-5	R-L	0.831	1.093	1.077	0.789	2.00	2.00	0.250	0.300	0.250	29.250	2B

R1	Nov.2017	F&P REVISED
R0	OCT. 2017	FIRST SUBMISSION
Rev.	Date	Description on Revisions

Revisions

CLIENT:- NATIONAL HIGHWAYS & INFRASTRUCTURE (Development Coporation Ltd)

AUTHORITY'S ENGINEER: STUP Consultants P. Ltd & Ayoleeza Consultants P. Ltd.
AUTHORISED SIGNATORY | DATE

PROOF CHECKED CONSULTANT:- CE TESTING Company Pvt. Ltd
AUTHORISED SIGNATORY | DATE 5/12/17

SAEFTY CONSULTANT:- Chaitanya Projects Consultancy Pvt. Ltd
AUTHORISED SIGNATORY | DATE

PROJECT: FOUR LANING OF NH-37 FROM RANGAGARA TO KALIABOR TINIALI (CH: 297.000 KM TO CH: 315.315 KM) IN NAGAON DISTRICT IN THE STATE OF ASSAM UNDER SARDP-NE, PHASE A ON EPC MODE

EPC CONTRACTOR:- SIMPLEX INFRASTRUCTURES LIMITED, 27, SHAKESPEARE SARANI, KOLKATA-17, INDIA

CONSULTANTS:- AECOM, 9th Floor, Infinity Tower C, DLF Cyber City, DLF Phase II, Gurgaon-122002, Haryana, India

DRAWN	DESIGN	CHECKED BY	APPROVED BY
R. BENIWAL	S. YADAV	S.P. SINGH	S. RASTOGI

SCALE:- 1 : 1000

TITLE:- GENERAL ARRANGEMENT DRAWING FOR RCC BOX CULVERT AT CH. 300+594 (SCH. CH. 300+800)

DRAWING NO.:- AECOM-DELD15159-DD-DWG-BC-300+594-GAD-01 | REV. R1

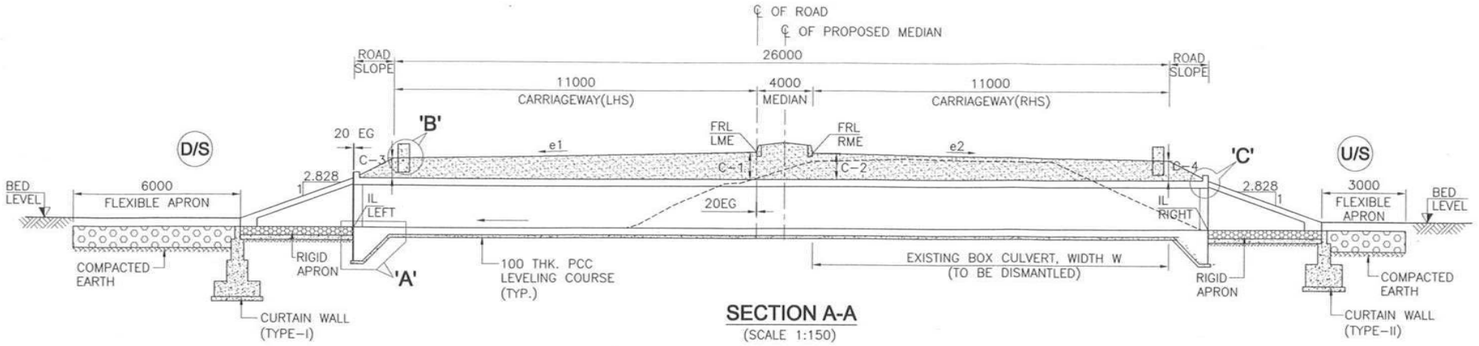

SECTION A-A
(SCALE 1:150)

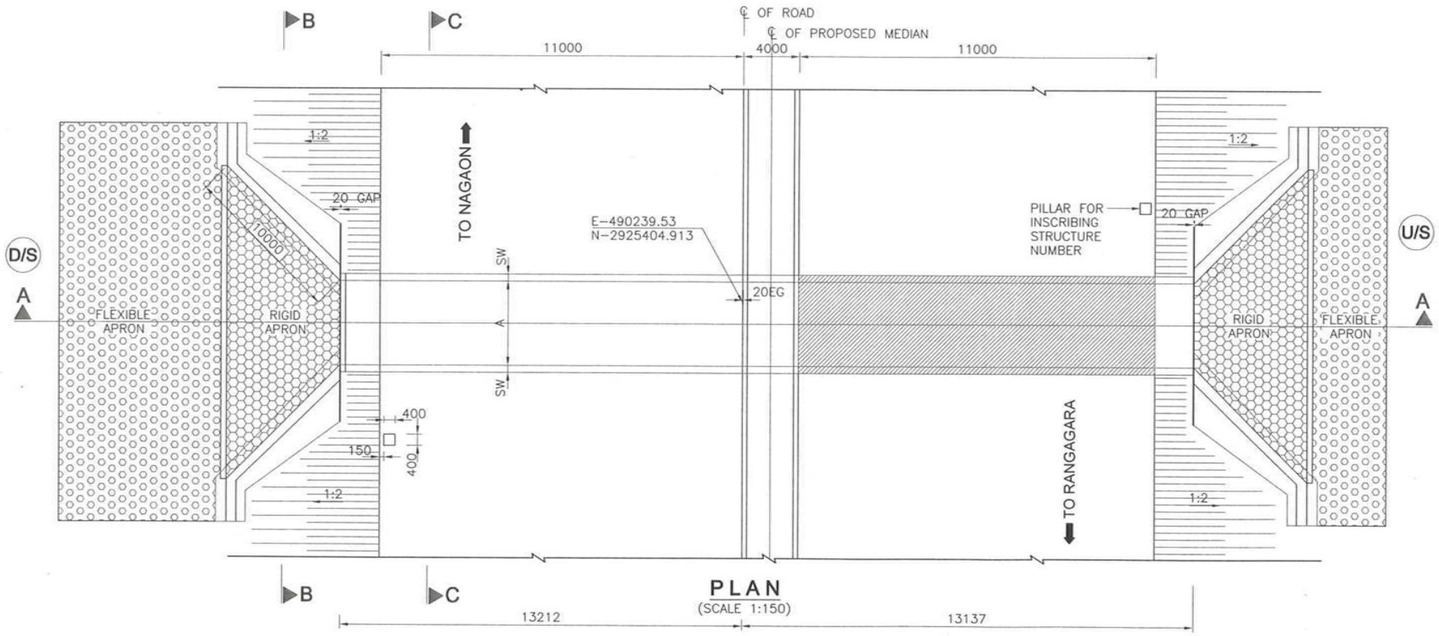

PLAN
(SCALE 1:150)

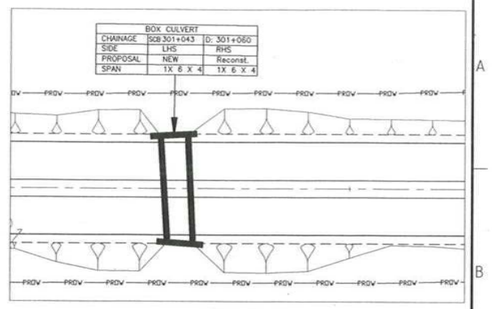

KEY PLAN

NOTES:-

1. ALL DIMENSIONS ARE IN MILLIMETERS, LEVELS ARE IN METERS UNLESS OTHERWISE MENTIONED.
2. NO DIMENSION SHALL BE MEASURED FROM THE DRAWINGS. ONLY WRITTEN DIMENSIONS SHALL BE FOLLOWED.
3. THE DRAWING SHALL BE READ IN CONJUNCTION WITH RELEVANT HIGHWAY PLAN AND PROFILE DRAWINGS. FRL, BED LEVEL, CAMBER/SUPERELEVATION AND LAYOUT SHALL ALSO BE VERIFIED AT SITE BEFORE EXECUTION. DISCEPANCIES SHALL BE BROUGHT TO THE NOTICE OF THE ENGINEER FOR REVISION IN DRAWINGS, IF ANY.
4. CHAINAGE OF THE STRUCTURE IS AT THE CENTER LINE OF THE PROPOSED STRUCTURE.
5. THE REINFORCEMENT SHALL BE HYSD BARS OF GRADE DESIGNATION Fe 500D CONFORMING TO IS 1786-2008 & IRC 112-2011.
6. CONCRETE SHALL BE DESIGN MIX WITH A MINIMUM 28 DAYS CHARACTERISTIC CUBE STRENGTH FOR DIFFERENT ELEMENTS AS FOLLOWS:
   a. RCC BOX STRUCTURE - M30
   b. PCC LEVELING COURSE - M15
   c. RCC FLY RETURN WALL - M30
   d. PCC CURTAIN WALL - M20
7. CLEAR COVER TO OUTER STEEL SHALL BE AS FOLLOWS:-
   a. SUPERSTRUCTURE 40MM
   b. VERTICAL FACE IN CONTACT WITH EARTH 75MM
   c. VERTICAL FACE NOT IN CONTACT WITH EARTH 40MM
   d. FOUNDATION 75MM
8. BACK FILLING BEHIND WALLS/ABUTMENT SHALL CONSISTS OF SELECTED EARTH CONFORMING TO APPENDIX 6 OF IRC:78-2014 HAVING PROPERTIES C=0, ϕ>=30°, γ=2.0t/cu.m.
9. FORMATION LEVEL SHOWN IS AT MEDIAN EDGE.
10. THE STRUCTURE HAS BEEN DESIGNED FOR LIVE LOAD COMBINATIONS CONFORMING TO IRC: 6-2014.
11. THE TOP OF BOTTOM RAFT SHALL BE KEPT MIN. 300MM BELOW LOWEST BED LEVEL. HOWEVER, CHANGE IN CLEAR HEIGHT OF RCC BOX SHALL NOT BE MORE THAN 500MM.
12. ALL SOLID WALLS RETAINING THE EARTH SHALL BE PROVIDED WITH WEEP HOLES (100MM DIA AND SLOPE 1V:20H) STARTING 150MM ABOVE THE GROUND LEVEL AND SPACED 1000MM C/C BOTH HORIZONTALLY AND VERTICALLY IN STAGGERED MANNER.
13. 600MM THICK FILTER MEDIA SHALL BE PROVIDED BEHIND SOLID ABUTMENT WALL & RETURN WALL.
14. CONDITION OF EXPOSURE IS MODERATE.
15. 20MM EXPANSION GAP FILLED WITH COMPRESSIBLE FIBER BOARD SHALL BE PROVIDED BETWEEN ADJACENT RCC BOXES.
16. THE SAFE BEARING CAPACITY AS PER DESIGN IS 7.89t/M². ANY VARIATION ON SITE SHOULD BE INFORMED TO THE DESIGN ENGINEER FOR NECESSARY ACTION.
17. THE LENGTH OF RIGID APRON SHALL BE AS PER ARTICLE 20 OF IRC:SP:13-2004.

LEGEND:-

FRL	-	FINISHED ROAD LEVEL
BL.	-	BED LEVEL
GL.	-	GROUND LEVEL
IL	-	INVERT LEVEL
EG	-	EXPANSION GAP
LOE	-	LEFT OUTER EDGE
ROE	-	RIGHT OUTER EDGE
LME	-	LEFT MEDIAN EDGE
RME	-	RIGHT MEDIAN EDGE
THK	-	THICKNESS
U/S	-	UPSTREAM
D/S	-	DOWNSTREAM

REFERENCE DRAWINGS.:-

1. REINFORCEMENT DETAILS FOR CULVERTS. AECOM-DELD15159-DD-DWG-BC-REINF.-01
2. MISCELLANEOUS DWGS. AECOM-DELD15159-MISC-01

SCHEDULE OF BOX CULVERT

S.No.	EXISTING KM.	DESIGN CH.	EXISTING SPAN NOS. x SPAN x HT.	EXISTING CULVERT	EXISTING WIDTH,W (m)	SKEW	PROPOSAL	PROPOSED STRUCTURE	PROPOSED SPAN (NOS. x SPAN x HT.)	FRL		CAMBER/ SUPERELEVATION		BED LEVEL		INVERT LEVEL		TCS	FLOW OF DIRECTION	CUSHION (m)				RCC BOX DIMENSIONS (m)					BARREL LENGTH OF BOX (m)	REINFORCEMENT CATEGORY (REFER REINF. DRAWING)
										LME	RME	LEFT (e1)	RIGHT (e2)	LEFT	RIGHT	LEFT	RIGHT			LOE (C-3)	LME (C-1)	RME (C-2)	ROE (C-4)	A	B	TS	BS	SW		
1	301+043	301+060	1 x 6.0 x 4.0	BOX CULVERT	11.6	0	RECONSTRUCTION	BOX CULVERT	1 x 6.0 x4.0	66.707	66.707	-2.500	-2.500	62.136	62.206	61.826	61.864	TYPE-5	R-L	0.106	0.370	0.355	0.068	6.00	4.00	0.5	0.55	0.5	26.349	6A

Resident Engineer
STUP Consultants Pvt. Ltd.
Nagaon, Assam

AP Saha
Design Director
(AECOM)

Rev.	Date	Description on Revisions
R1	Nov. 2017	P&P REVISED
R0	OCT. 2017	FIRST SUBMISSION

Revisions

CLIENT:- NATIONAL HIGHWAYS & INFRASTRUCTURE (Development Coporation Ltd)

AUTHORITY'S ENGINEER: STUP Consultants P. Ltd & Ayoleeza Consultants P. Ltd. — AUTHORISED SIGNATORY — DATE

PROOF CHECKED CONSULTANT:- CE TESTING Company Pvt. Ltd — AUTHORISED SIGNATORY — DATE 5/12/17

SAFETY CONSULTANT:- Chaitanya Projects Consultancy Pvt. Ltd — AUTHORISED SIGNATORY — DATE

PROJECT: FOUR LANING OF NH-37 FROM RANGAGARA TO KALIABOR TINIALI (CH: 297.000 KM TO CH: 315.315 KM) IN NAGAON DISTRICT IN THE STATE OF ASSAM UNDER SARDP-NE, PHASE A ON EPC MODE

EPC CONTRACTOR:- SIMPLEX INFRASTRUCTURES LIMITED, 27, SHAKESPEARE SARANI, KOLKATA-17, INDIA

CONSULTANTS:- AECOM, 9th Floor, Infinity Tower C, DLF Cyber City, DLF Phase II, Gurgaon-122002, Haryana, India

DRAWN	DESIGN	CHECKED BY	APPROVED BY
R. BENIWAL	S. YADAV	P.P. SINGH	S. RASTOGI

SCALE:- 1 : 1000

TITLE:- GENERAL ARRANGEMENT DRAWING FOR RCC BOX CULVERT AT CH. 301+060 (SCH. CH. 301+043)

DRAWING NO.:- AECOM-DELD15159-DD-DWG-BC-301+060-GAD-01 — SH 1 OF 2 — REV. R1

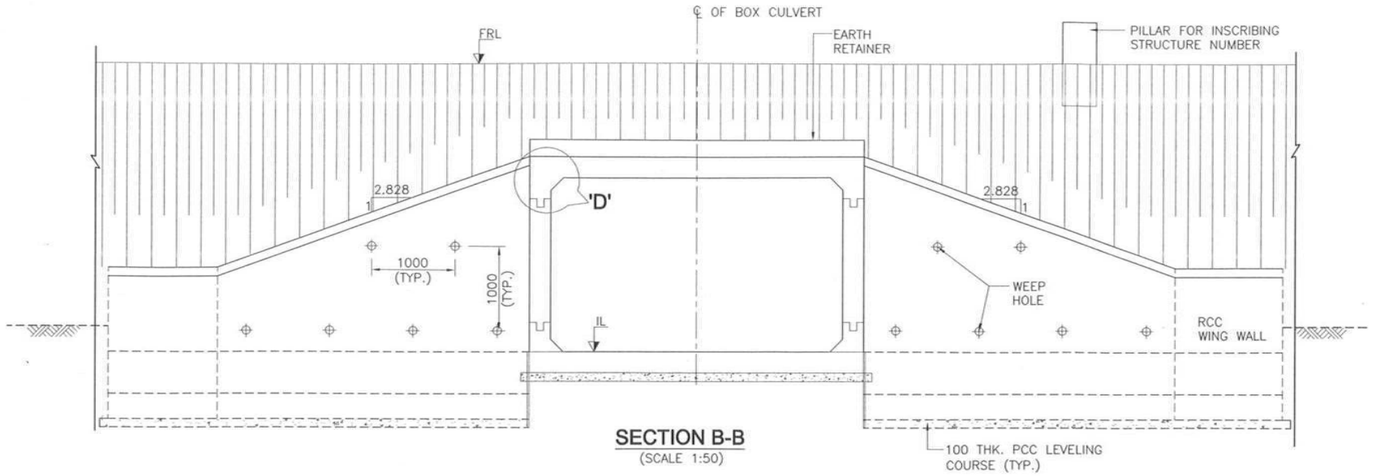

SECTION B-B
(SCALE 1:50)

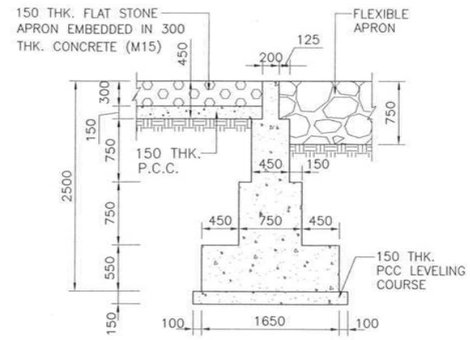

DETAILS OF PCC CURTAIN WALL TYPE-I
(SCALE 1:50)

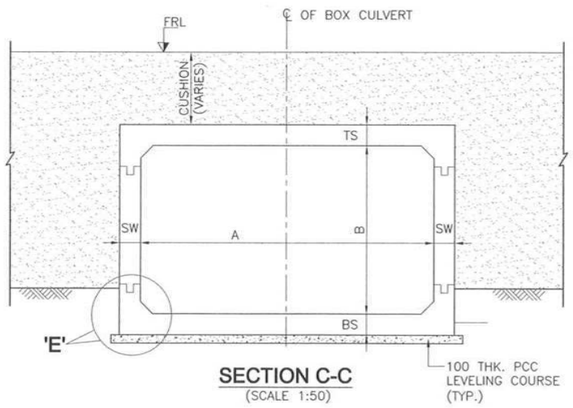

SECTION C-C
(SCALE 1:50)

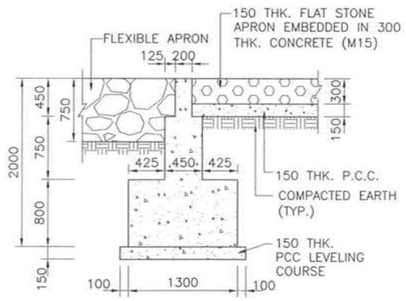

DETAILS OF PCC CURTAIN WALL TYPE-II
(SCALE 1:50)

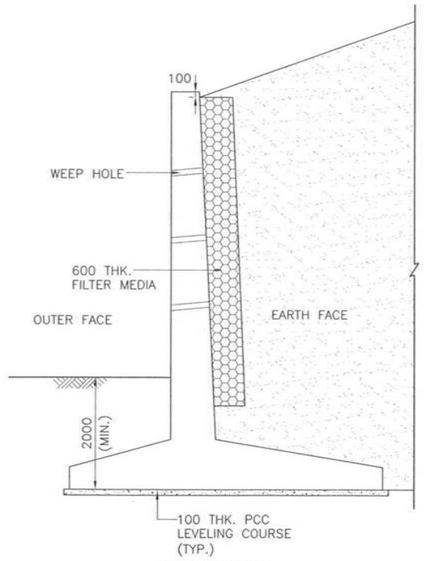

WING WALL
SCALE 1:75

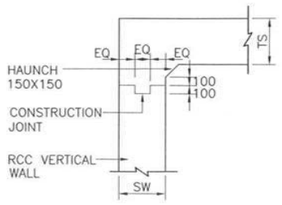

DETAIL-`D'
(SCALE 1:50)

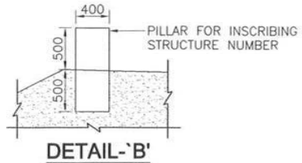

DETAIL-`B'
(SCALE 1:50)

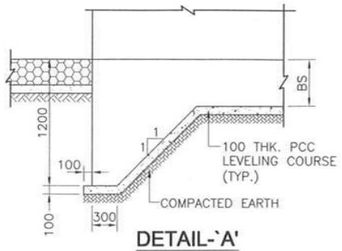

DETAIL-`A'
(SCALE 1:50)

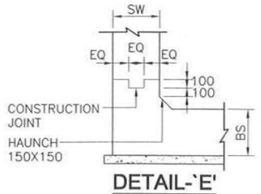

DETAIL-`E'
(SCALE 1:50)

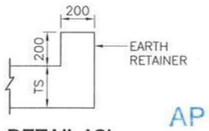

DETAIL-`C'
(SCALE 1:25)

Resident Engineer
STUP Consultants Pvt. Ltd.
Nagaon, Assam

AP Saha
Design Director
(AECOM)

Rev.	Date	Description on Revisions
R1	Nov. 2017	P&P REVISED
R0	OCT. 2017	FIRST SUBMISSION

Revisions

CLIENT:- NATIONAL HIGHWAYS & INFRASTRUCTURE (Development Coporation Ltd)

AUTHORITY'S ENGINEER: STUP Consultants P. Ltd & Ayoleeza Consultants P. Ltd.

PROOF CHECKED CONSULTANT:- CE TESTING Company Pvt. Ltd

SAFETY CONSULTANT:- Chaitanya Projects Consultancy Pvt. Ltd

PROJECT: FOUR LANING OF NH-37 FROM RANGAGARA TO KALIABOR TINIALI (CH: 297.000 KM TO CH: 315.315 KM) IN NAGAON DISTRICT IN THE STATE OF ASSAM UNDER SARDP-NE, PHASE A ON EPC MODE

EPC CONTRACTOR:- SIMPLEX INFRASTRUCTURES LIMITED, 27, SHAKESPEARE SARANI, KOLKATA-17, INDIA

CONSULTANTS:- AECOM, 9th Floor, Infinity Tower C DLF Cyber City, DLF Phase II, Gurgaon-122002, Haryana, India

R. BENIWAL	S.YADAV	S.P. SINGH	S. KASTOGI
DRAWN	DESIGN	CHECKED BY	APPROVED BY

SCALE:- 1 : 1000

TITLE:- GENERAL ARRANGEMENT DRAWING FOR RCC BOX CULVERT AT CH. 301+060 (SCH. CH. 301+043)

DRAWING NO.:- AECOM-DELD15159-DD-DWG-BC-301+060-GAD-01 SH 2 OF 2 REV. R1

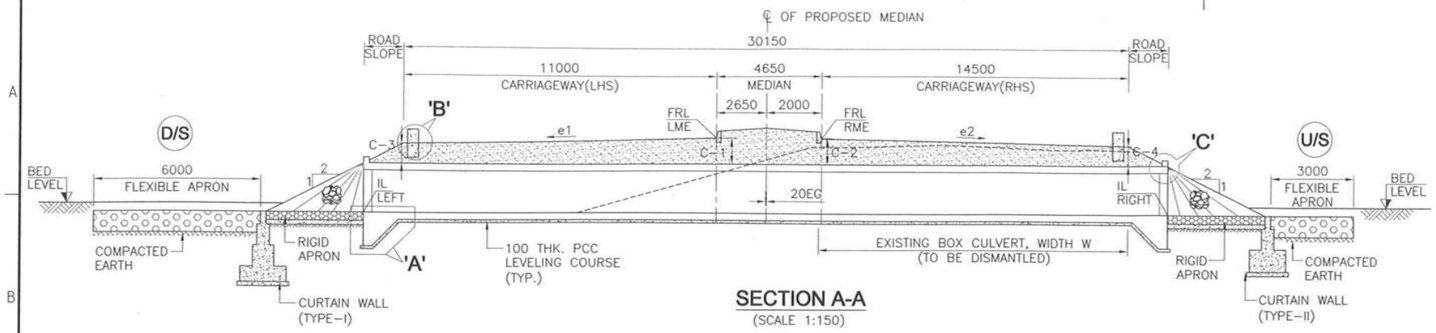

SECTION A-A
(SCALE 1:150)

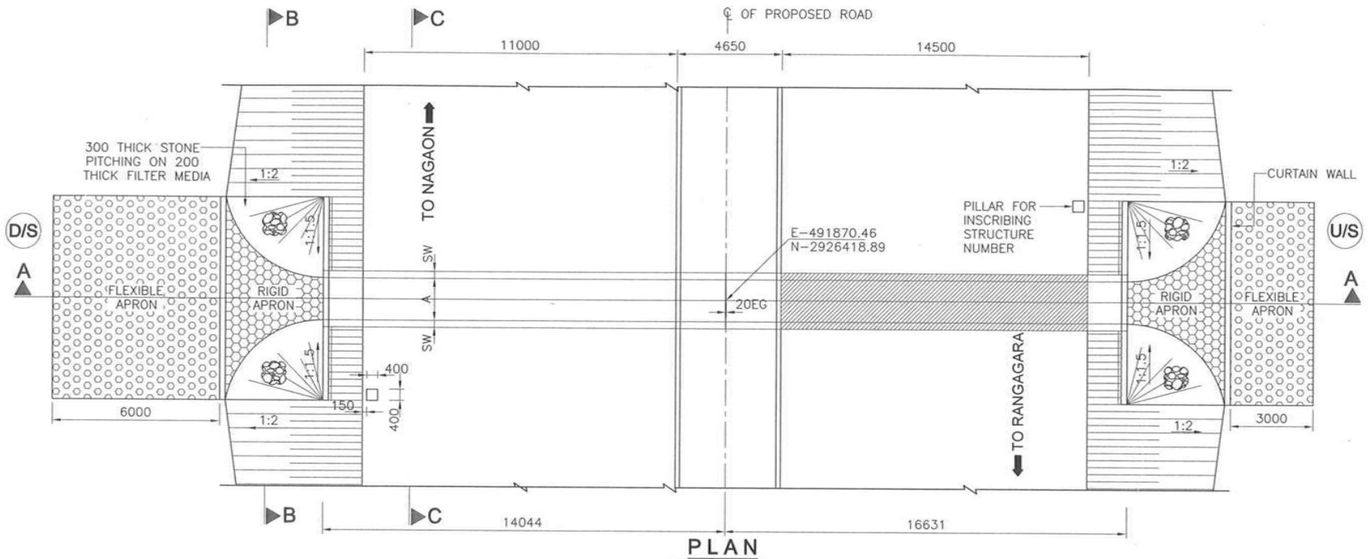

PLAN
(SCALE 1:150)

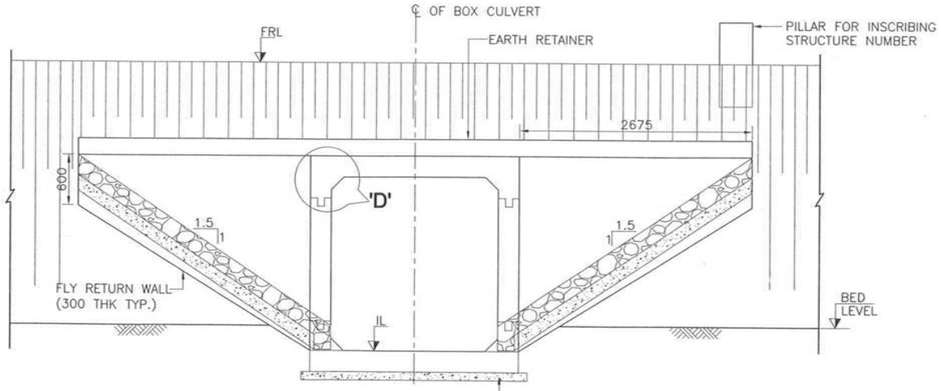

SECTION B-B
(SCALE 1:50)

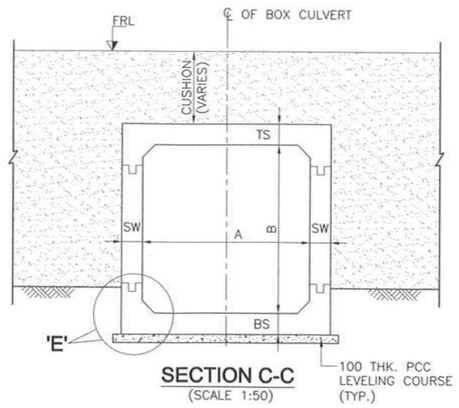

SECTION C-C
(SCALE 1:50)

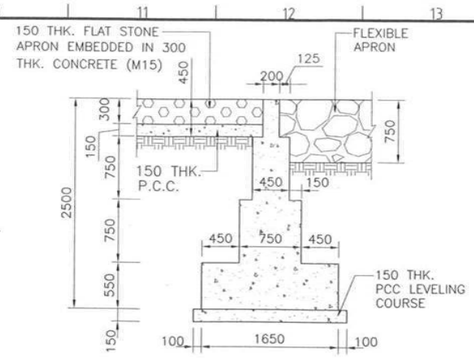

DETAILS OF PCC CURTAIN WALL TYPE-I
(SCALE 1:50)

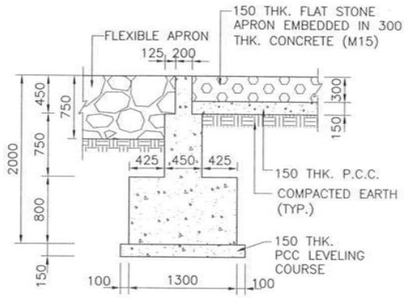

DETAILS OF PCC CURTAIN WALL TYPE-II
(SCALE 1:50)

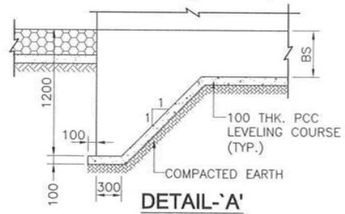

DETAIL-`A'
(SCALE 1:50)

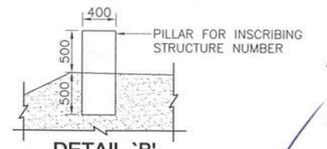

DETAIL-`B'
(SCALE 1:50)

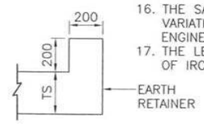

DETAIL-`C'
(SCALE 1:25)

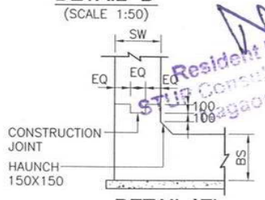

DETAIL-`E'
(SCALE 1:50)

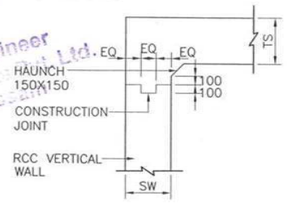

DETAIL-`D'
(SCALE 1:50)

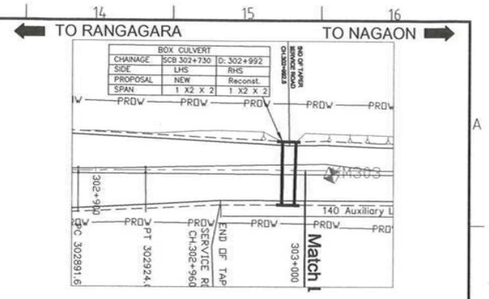

KEY PLAN

NOTES:-

1. ALL DIMENSIONS ARE IN MILLIMETERS, LEVELS ARE IN METERS UNLESS OTHERWISE MENTIONED.
2. NO DIMENSION SHALL BE MEASURED FROM THE DRAWINGS. ONLY WRITTEN DIMENSIONS SHALL BE FOLLOWED.
3. THE DRAWING SHALL BE READ IN CONJUNCTION WITH RELEVANT HIGHWAY PLAN AND PROFILE DRAWINGS. FRL, BED LEVEL, CAMBER/SUPERELEVATION AND LAYOUT SHALL ALSO BE VERIFIED AT SITE BEFORE EXECUTION. DISCEPANCIES SHALL BE BROUGHT TO THE NOTICE OF THE ENGINEER FOR REVISION IN DRAWINGS, IF ANY.
4. CHAINAGE OF THE STRUCTURE IS AT THE CENTER LINE OF THE PROPOSED STRUCTURE.
5. THE REINFORCEMENT SHALL BE HYSD BARS OF GRADE DESIGNATION Fe 500D CONFORMING TO IS 1786-2008 & IRC 112-2011.
6. CONCRETE SHALL BE DESIGN MIX WITH A MINIMUM 28 DAYS CHARACTERISTIC CUBE STRENGTH FOR DIFFERENT ELEMENTS AS FOLLOWS:
   - a.RCC BOX STRUCTURE – M30
   - b.PCC LEVELING COURSE – M15
   - c.RCC FLY RETURN WALL – M30
   - d.PCC CURTAIN WALL – M20
7. CLEAR COVER TO OUTER STEEL SHALL BE AS FOLLOWS:-
   - a.SUPERSTRUCTURE 40MM
   - b.VERTICAL FACE IN CONTACT WITH EARTH 75MM
   - c.VERTICAL FACE NOT IN CONTACT WITH EARTH 40MM
   - d.FOUNDATION 75MM
8. BACK FILLING BEHIND WALLS/ABUTMENT SHALL CONSISTS OF SELECTED EARTH CONFORMING TO APPENDIX 6 OF IRC:78-2014 HAVING PROPERTIES C=0, ϕ>=30', γ=2.0t/cu.m.
9. FORMATION LEVEL SHOWN IS AT MEDIAN EDGE.
10. THE STRUCTURE HAS BEEN DESIGNED FOR LIVE LOAD COMBINATIONS CONFORMING TO IRC: 6-2014.
11. THE TOP OF BOTTOM RAFT SHALL BE KEPT MIN. 300MM BELOW LOWEST BED LEVEL. HOWEVER, CHANGE IN CLEAR HEIGHT OF RCC BOX SHALL NOT BE MORE THAN 500MM.
12. ALL SOLID WALLS RETAINING THE EARTH SHALL BE PROVIDED WITH WEEP HOLES (100MM DIA AND SLOPE 1V:20H) STARTING 150MM ABOVE THE GROUND LEVEL AND SPACED 1000MM C/C BOTH HORIZONTALLY AND VERTICALLY IN STAGGERED MANNER.
13. 600MM THICK FILTER MEDIA SHALL BE PROVIDED BEHIND SOLID ABUTMENT WALL & RETURN WALL.
14. CONDITION OF EXPOSURE IS MODERATE.
15. 20MM EXPANSION GAP FILLED WITH COMPRESSIBLE FIBER BOARD SHALL BE PROVIDED BETWEEN ADJACENT RCC BOXES.
16. THE SAFE BEARING CAPACITY AS PER DESIGN IS 6.39t/M². ANY VARIATION ON SITE SHOULD BE INFORMED TO THE DESIGN ENGINEER FOR NECESSARY ACTION.
17. THE LENGTH OF RIGID APRON SHALL BE AS PER ARTICLE 20 OF IRC:SP:13-2004.

LEGEND:-

FRL	–	FINISHED ROAD LEVEL
BL.	–	BED LEVEL
GL.	–	GROUND LEVEL
IL	–	INVERT LEVEL
EG	–	EXPANSION GAP
LOE	–	LEFT OUTER EDGE
ROE	–	RIGHT OUTER EDGE
LME	–	LEFT MEDIAN EDGE
RME	–	RIGHT MEDIAN EDGE
THK	–	THICKNESS
U/S	–	UPSTREAM
D/S	–	DOWNSTREAM

REFERENCE DRAWINGS.:-

1. REINFORCEMENT DETAILS FOR CULVERTS. AECOM-DELD15159-DD-DWG-BC-REINF.-01
2. MISCELLANEOUS DWGS. AECOM-DELD15159-MISC-01

Resident Engineer
STUP Consultants Pvt. Ltd.
Nagaon, Assam

AP Saha
Design Director
(AECOM)

SCHEDULE OF BOX CULVERT

S.No.	EXISTING KM.	DESIGN CH.	EXISTING SPAN NOS. x SPAN x HT.	EXISTING CULVERT	EXISTING WIDTH,W (m)	SKEW	PROPOSAL	PROPOSED STRUCTURE	PROPOSED SPAN (NOS.xSPAN xHT.)	FRL		CAMBER/ SUPERELEVATION		BED LEVEL		INVERT LEVEL		TCS	FLOW OF DIRECTION	CUSHION (m)				RCC BOX DIMENSIONS (m)					BARREL LENGTH OF BOX (m)	REINFORCEMENT CATEGORY (REFER REINF. DRAWING)
										LME	RME	LEFT (e1)	RIGHT (e2)	LEFT	RIGHT	LEFT	RIGHT			LOE (C-3)	LME (C-1)	RME (C-2)	ROE (C-4)	A	B	TS	BS	SW		
1	302+730	302+992	1 x 2.0 x 2.0	BOX CULVERT	11.7	0	RECONSTRUCTION	BOX CULVERT	1 x 2.0 x2.0	67.831	67.831	-2.50	-2.50	65.719	65.789	65.109	65.153	TYPE-4	R-L	0.197	0.459	0.441	0.065	2.00	2.00	0.250	0.300	0.250	30.675	2A

Rev.	Date	Description on Revisions
R1	Nov.2017	F&P REVISED
R0	OCT. 2017	FIRST SUBMISSION

Revisions

CLIENT:- NATIONAL HIGHWAYS & INFRASTRUCTURE (Development Coporation Ltd)

AUTHORITY'S ENGINEER: STUP Consultants P. Ltd & Ayoleeza Consultants P. Ltd. — AUTHORISED SIGNATORY — DATE

PROOF CHECKED CONSULTANT:- CE TESTING Company Pvt. Ltd — AUTHORISED SIGNATORY — DATE 5/12/17

SAEFTY CONSULTANT:- Chaitanya Projects Consultancy Pvt. Ltd — AUTHORISED SIGNATORY — DATE

PROJECT: FOUR LANING OF NH-37 FROM RANGAGARA TO KALIABOR TINIALI (CH: 297.000 KM TO CH: 315.315 KM) IN NAGAON DISTRICT IN THE STATE OF ASSAM UNDER SARDP-NE, PHASE A ON EPC MODE

EPC CONTRACTOR:- SIMPLEX INFRASTRUCTURES LIMITED, 27, SHAKESPEARE SARANI, KOLKATA-17, INDIA

CONSULTANTS:- AECOM, 9th Floor, Infinity Tower C DLF Cyber City DLF Phase II, Gurgaon-122002, Haryana, India

DRAWN	DESIGN	CHECKED BY	APPROVED BY
R. BENIWAL	S. YADAV	S.P. SINGH	S. RASTOGI

SCALE:- 1 : 1000

TITLE:- GENERAL ARRANGEMENT DRAWING FOR RCC BOX CULVERT AT CH. 302+992 (SCH. CH. 302+730)

DRAWING NO.:- AECOM-DELD15159-DD-DWG-BC-302+992-GAD-01 — REV. R1

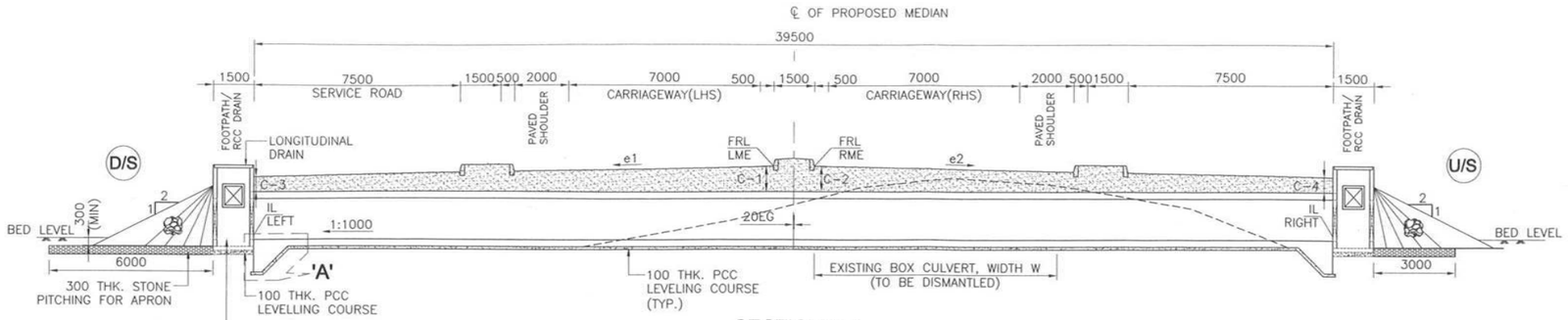

SECTION A-A

(SCALE 1:150)

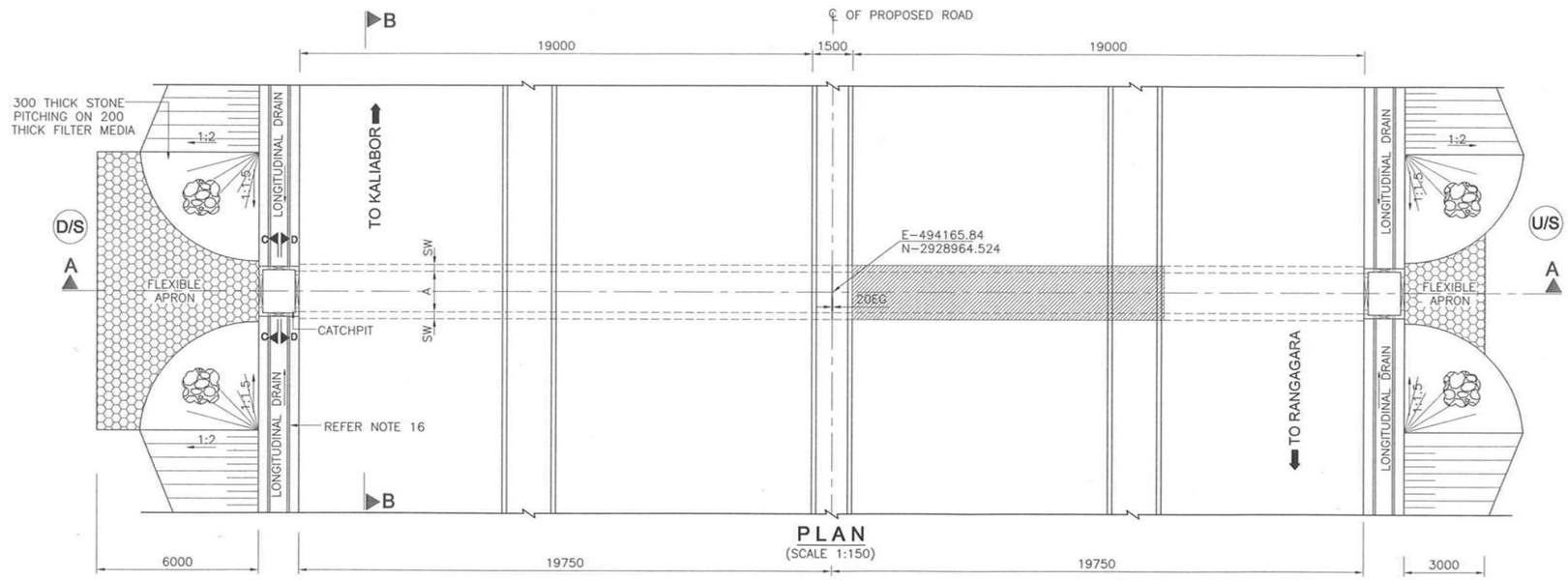

PLAN

(SCALE 1:150)

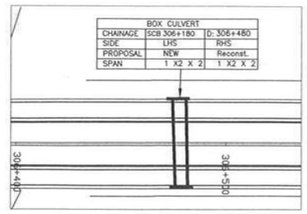

KEY PLAN

NOTES:-

1. ALL DIMENSIONS ARE IN MILLIMETERS, LEVELS ARE IN METERS UNLESS OTHERWISE MENTIONED.
2. NO DIMENSION SHALL BE MEASURED FROM THE DRAWINGS. ONLY WRITTEN DIMENSIONS SHALL BE FOLLOWED.
3. THE DRAWING SHALL BE READ IN CONJUNCTION WITH RELEVANT HIGHWAY PLAN AND PROFILE DRAWINGS. FRL, BED LEVEL, CAMBER/SUPERELEVATION AND LAYOUT SHALL ALSO BE VERIFIED AT SITE BEFORE EXECUTION. DISCEPANCIES SHALL BE BROUGHT TO THE NOTICE OF THE ENGINEER FOR REVISION IN DRAWINGS, IF ANY.
4. CHAINAGE OF THE STRUCTURE IS AT THE CENTER LINE OF THE PROPOSED STRUCTURE.
5. THE REINFORCEMENT SHALL BE HYSD BARS OF GRADE DESIGNATION Fe 500D CONFORMING TO IS 1786-2008 & IRC 112-2011.
6. CONCRETE SHALL BE DESIGN MIX WITH A MINIMUM 28 DAYS CHARACTERISTIC CUBE STRENGTH FOR DIFFERENT ELEMENTS AS FOLLOWS:
   a. RCC BOX STRUCTURE – M30
   b. PCC LEVELING COURSE – M15
   c. RCC FLY RETURN WALL – M30
   d. PCC CURTAIN WALL – M20
7. CLEAR COVER TO OUTER STEEL SHALL BE AS FOLLOWS:-
   a. SUPERSTRUCTURE 40MM
   b. VERTICAL FACE IN CONTACT WITH EARTH 75MM
   c. VERTICAL FACE NOT IN CONTACT WITH EARTH 40MM
   d. FOUNDATION 75MM
8. BACK FILLING BEHIND WALLS/ABUTMENT SHALL CONSISTS OF SELECTED EARTH CONFORMING TO APPENDIX 6 OF IRC:78-2014 HAVING PROPERTIES C=0, ϕ>=30°, γ=2.0t/cu.m.
9. FORMATION LEVEL SHOWN IS AT MEDIAN EDGE.
10. THE STRUCTURE HAS BEEN DESIGNED FOR LIVE LOAD COMBINATIONS CONFORMING TO IRC: 6-2014.
11. THE TOP OF BOTTOM RAFT SHALL BE KEPT MIN. 300MM BELOW LOWEST BED LEVEL. HOWEVER, CHANGE IN CLEAR HEIGHT OF RCC BOX SHALL NOT BE MORE THAN 500MM.
12. ALL SOLID WALLS RETAINING THE EARTH SHALL BE PROVIDED WITH WEEP HOLES (100MM DIA AND SLOPE 1V:20H) STARTING 150MM ABOVE THE GROUND LEVEL AND SPACED 1000MM C/C BOTH HORIZONTALLY AND VERTICALLY IN STAGGERED MANNER.
13. 600MM THICK FILTER MEDIA SHALL BE PROVIDED BEHIND SOLID ABUTMENT WALL & RETURN WALL.
14. CONDITION OF EXPOSURE IS MODERATE.
15. 20MM EXPANSION GAP FILLED WITH COMPRESSIBLE FIBER BOARD SHALL BE PROVIDED BETWEEN ADJACENT RCC BOXES.
16. THE SAFE BEARING CAPACITY AS PER DESIGN IS 6.39t/M². ANY VARIATION ON SITE SHOULD BE INFORMED TO THE DESIGN ENGINEER FOR NECESSARY ACTION.
17. THE LENGTH OF RIGID APRON SHALL BE AS PER ARTICLE 20 OF IRC:SP:13-2004.

LEGEND:-

FRL	–	FINISHED ROAD LEVEL
BL.	–	BED LEVEL
GL.	–	GROUND LEVEL
IL	–	INVERT LEVEL
EG	–	EXPANSION GAP
LOE	–	LEFT OUTER EDGE
ROE	–	RIGHT OUTER EDGE
LME	–	LEFT MEDIAN EDGE
RME	–	RIGHT MEDIAN EDGE
THK	–	THICKNESS
U/S	–	UPSTREAM
D/S	–	DOWNSTREAM

REFERENCE DRAWINGS.:-

1. REINFORCEMENT DETAILS FOR CULVERTS AECOM-DELD15159-DD-DWG-BC-01
2. MISCELLANEOUS DWGS. AECOM-DELD15159-MISC-01

Resident Engineer
STUP Consultants Pvt. Ltd
Nagaon, Assam

* ALL LEVEL SHALL BE VERIFIED WITH LATEST APPROVED PLAN & PROFILE DRAWINGS BEFORE EXECUTION OF WORK.

SCHEDULE OF BOX CULVERT

S.No.	EXISTING KM.	DESIGN CH.	EXISTING SPAN (NOS. x C/C OF EXP.)	EXISTING CULVERT	EXISTING WIDTH,W (m)	SKEW	PROPOSAL	PROPOSED STRUCTURE	PROPOSED SPAN (NOS. x L)	CARRIAGEWAY	FRL		CAMBER/ SUPERELEVATION		BED LEVEL		INVERT LEVEL		TCS	FLOW OF DIRECTION	CUSHION (m)				RCC BOX DIMENSIONS (m)					BARREL LENGTH OF BOX (m)	REINFORCEMENT CATEGORY (REFER REINF. DRAWING)
											LME	RME	LEFT (e1)	RIGHT (e2)	LEFT	RIGHT	LEFT	RIGHT			LOE (C-3)	LME (C-1)	RME (C-2)	ROE (C-4)	A	B	TS	BS	SW		
1	306+180	306+480	1 x 2.0 x 2.0	BOX CULVERT	11.6	0	RECONSTRUCTION	BOX CULVERT	1 x 2.0 x2.0	MAIN CARRIAGEWAY	68.166	68.166	-2.500	-2.500	65.339	65.453	65.039	65.082	TYPE-7	R-L	0.628	0.856	0.855	0.608	2.000	2.000	0.250	0.300	0.250	39.500	2A
										SERVICE ROAD*	68.166	68.166	-2.500	-2.500							0.639	0.867	0.843	0.597							

AP Saha
Design Director
(AECOM)

Rev.	Date	Description on Revisions
R1	Nov.2017	P&P REVISED
R0	SEPT. 2017	FIRST SUBMISSION

Revisions

CLIENT:- NATIONAL HIGHWAYS & INFRASTRUCTURE (Development Coporation Ltd)

AUTHORITY'S ENGINEER: STUP Consultants P. Ltd & Ayoleeza Consultants P. Ltd. — AUTHORISED SIGNATORY — DATE

PROOF CHECKED CONSULTANT:- CE TESTING Company Pvt. Ltd — AUTHORISED SIGNATORY — DATE 5/12/17

SAEFTY CONSULTANT:- Chaitanya Projects Consultancy Pvt. Ltd — AUTHORISED SIGNATORY — DATE

PROJECT: FOUR LANING OF NH-37 FROM RANGAGARA TO KALIABOR TINIALI (CH: 297.000 KM TO CH: 315.315 KM) IN NAGAON DISTRICT IN THE STATE OF ASSAM UNDER SARDP-NE, PHASE A ON EPC MODE

EPC CONTRACTOR:- SIMPLEX INFRASTRUCTURES LIMITED, 27, SHAKESPEARE SARANI, KOLKATA-17, INDIA

CONSULTANTS:- AECOM, 9th Floor, Infinity Tower C DLF Cyber City DLF Phase II, Gurgaon-122002, Haryana, India

DRAWN	DESIGN	CHECKED BY	APPROVED BY
R. BENIWAL	S. YADAV	S.P. SINGH	S. RASTOGI

SCALE:- 1 : 1000

TITLE:- GENERAL ARRANGEMENT DRAWING FOR RCC BOX CULVERT AT CH. 306+480 (SCH. CH. 306+180)

DRAWING NO.:- AECOM-DELD15159-DD-DWG-BC-306+480-GAD-01 (SH 1 OF 2) REV. R1

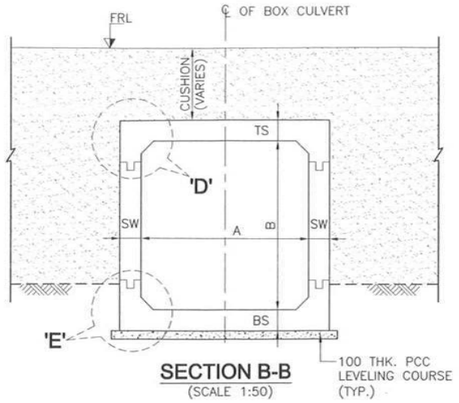

SECTION B-B
(SCALE 1:50)

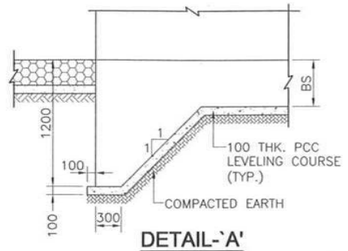

DETAIL-`A'
(SCALE 1:50)

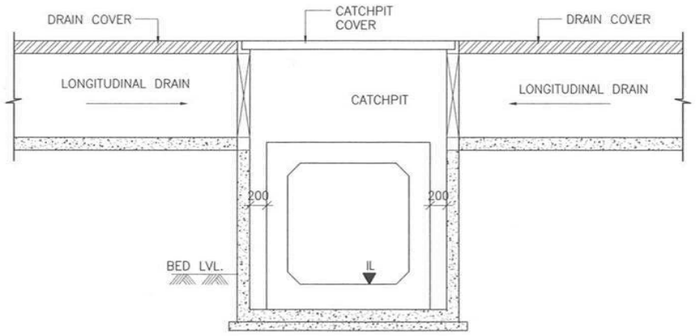

SECTION D-D
(SCALE 1:50)

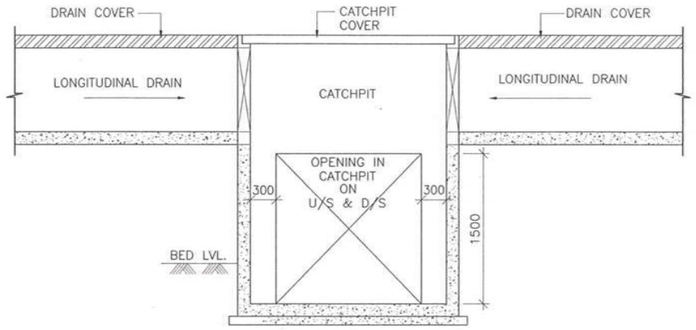

SECTION C-C
(SCALE 1:50)

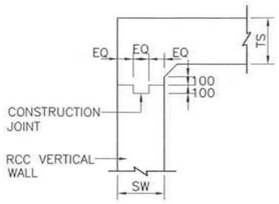

DETAIL-`D'
(SCALE 1:50)

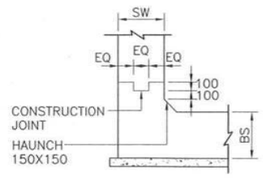

DETAIL-`E'
(SCALE 1:50)

Resident Engineer
STUP Consultants Pvt. Ltd.
Nagaon, Assam

AP Saha
Design Director
(AECOM)

Rev.	Date	Description on Revisions
R1	Nov.2017	P&P REVISED
R0	SEPT. 2017	FIRST SUBMISSION

Revisions

CLIENT:- NATIONAL HIGHWAYS & INFRASTRUCTURE (Development Coporation Ltd)

AUTHORITY'S ENGINEER: STUP Consultants P. Ltd & Ayoleeza Consultants P. Ltd.

PROOF CHECKED CONSULTANT:- CE TESTING Company Pvt. Ltd — DATE 5/12/17

SAFETY CONSULTANT:- Chaitanya Projects Consultancy Pvt. Ltd

PROJECT: FOUR LANING OF NH-37 FROM RANGAGARA TO KALIABOR TINIALI (CH: 297.000 KM TO CH: 315.315 KM) IN NAGAON DISTRICT IN THE STATE OF ASSAM UNDER SARDP-NE, PHASE A ON EPC MODE

EPC CONTRACTOR:- SIMPLEX INFRASTRUCTURES LIMITED, 27, SHAKESPEARE SARANI, KOLKATA-17, INDIA

CONSULTANTS:- AECOM India Private Limited, 9th Floor, Infinity Tower C, DLF City Co, DLF Phase II, Gurgaon-122002, Haryana, India

R. BENIWAL	S. YADAV	S.P. SINGH	S. RASTOGI
DRAWN	DESIGN	CHECKED BY	APPROVED BY

SCALE:- 1 : 1000

TITLE:- GENERAL ARRANGEMENT DRAWING FOR RCC BOX CULVERT AT CH. 306+480 (SCH. CH. 306+180) (SH 2 OF 2)

DRAWING NO.:- AECOM-DELD15159-DD-DWG-BC-306+480-GAD-01 — REV. R1

GENERAL ARRANGEMENT DRAWING FOR FLYOVER AT CH. 314+992

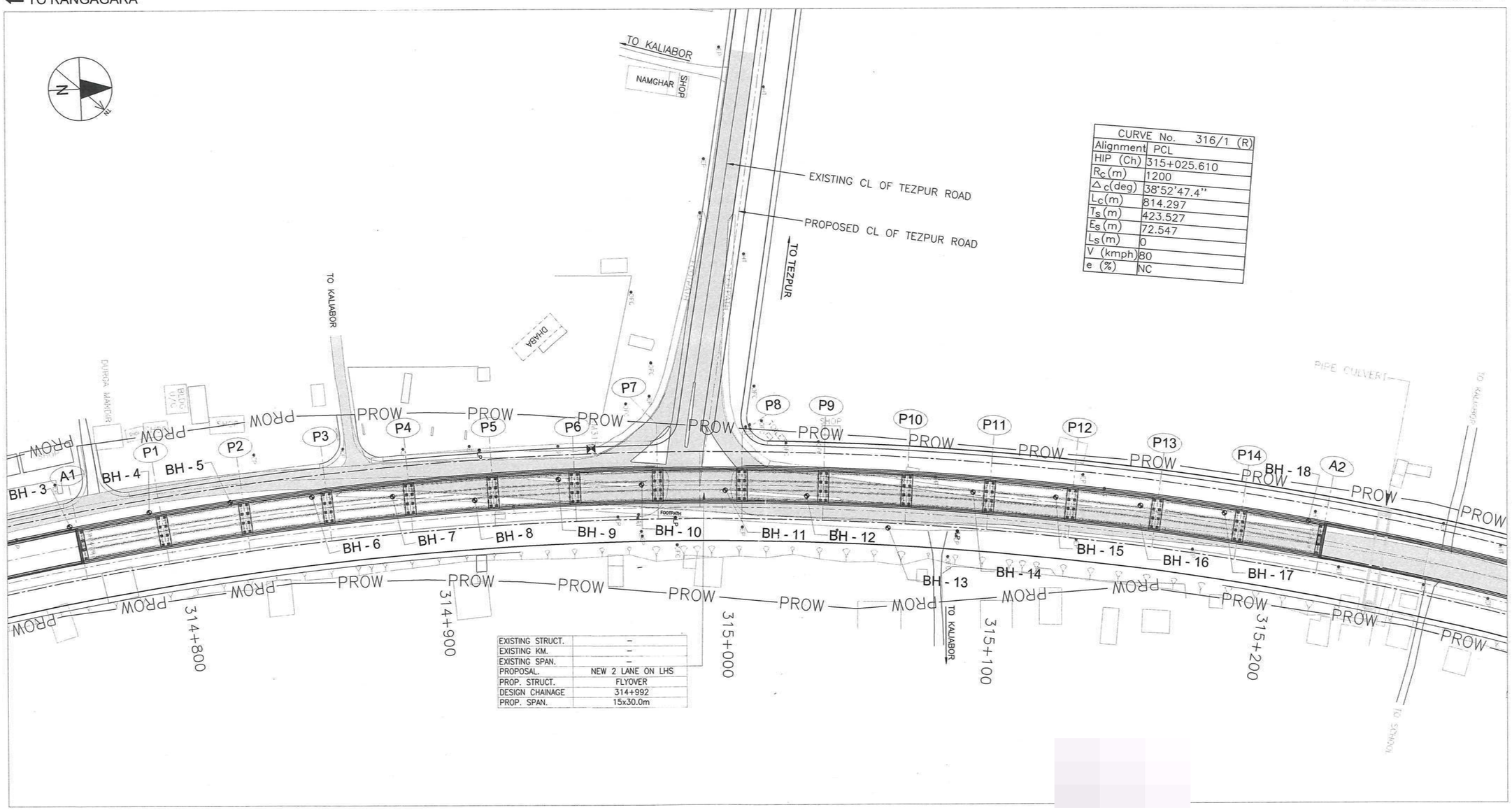

CURVE No.	316/1 (R)
Alignment	PCL
HIP (Ch)	315+025.610
R_c (m)	1200
Δ_c (deg)	38°52'47.4"
L_c (m)	814.297
T_s (m)	423.527
E_s (m)	72.547
L_s (m)	0
V (kmph)	80
e (%)	NC

EXISTING STRUCT.	–
EXISTING KM.	–
EXISTING SPAN.	–
PROPOSAL.	NEW 2 LANE ON LHS
PROP. STRUCT.	FLYOVER
DESIGN CHAINAGE	314+992
PROP. SPAN.	15x30.0m

KEY PLAN

FOR APPROVAL

Rev.	Date	Description on Revisions
R1	10-08-2018	Shifting of Junction as per NHIDCL's requirement
R0	22-11-2017	FIRST SUBMISSION

Revisions

CLIENT:- NATIONAL HIGHWAYS & INFRASTRUCTURE DEVELOPMENT CORPORATION LTD

AUTHORITY'S ENGINEER: STUP Consultants P. Ltd & Ayoleeza Consultants P. Ltd. — AUTHORISED SIGNATORY — DATE

PROOF CHECK CONSULTANT: CETEST — AUTHORISED SIGNATORY — DATE

SAEFTY CONSULTANT:- Chaitanya Projects Consultancy Pvt. Ltd — AUTHORISED SIGNATORY — DATE

PROJECT: FOUR LANING OF NH-37 FROM RANGAGARA TO KALIABOR TINIALI (CH: 297.000 KM TO CH: 315.315 KM) IN NAGAON DISTRICT IN THE STATE OF ASSAM UNDER SARDP-NE, PHASE A ON EPC MODE

EPC CONTRACTOR:- SIMPLEX INFRASTRUCTURES LIMITED, 27, SHAKESPEARE SARANI, KOLKATA-17, INDIA

CONSULTANTS:- AECOM, 9th Floor, Infinity Tower C DLF Cyber City, DLF Phase II, Gurgaon-122002, Haryana, India

DRAWN	DESIGN	CHECKED BY	APPROVED BY
MANISH VERMA	S. YADAV	S. P. SINGH	S. RASTOGI

SCALE:- AS SHOWN

TITLE:- GENERAL ARRANGEMENT DRAWING FOR FLYOVER AT CH. 314+992 (SCH. B CH. 314+747)

DRAWING NO.:- AECOM-DELD15159-DD-DWG-FO-314+992-GAD-01 (SH 1 OF 6)

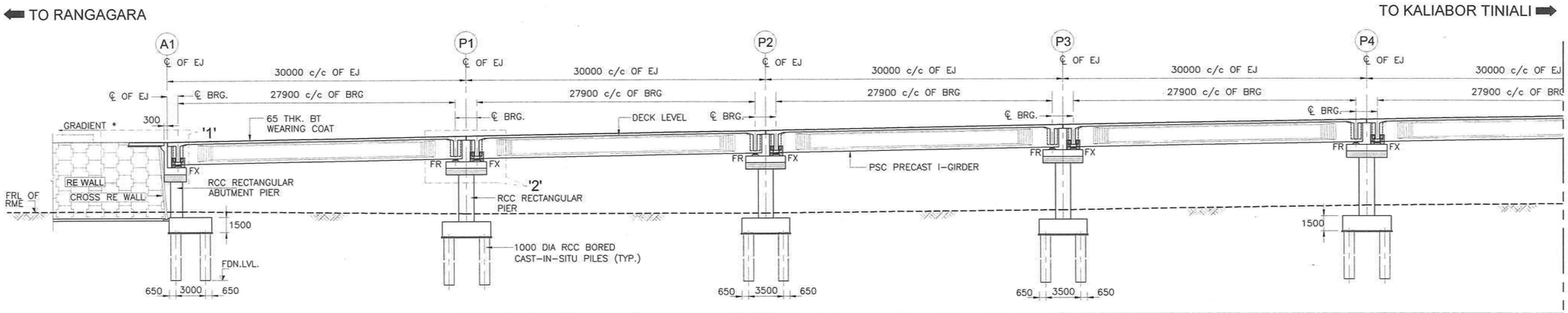

FRL	73.711	74.307	74.903	75.498	76.076
FRL OF RME	68.352	68.340	68.364	68.431	68.509
PILE CAP TOP	67.602	67.590	67.614	67.681	67.759
FOUNDING LVL.	36.102	36.090	36.114	36.181	36.259
DESIGN CHAINAGE AT PROPOSED CL	314+768.523	314+798.324	314+828.126	314+857.927	314+887.728

LONGITUDINAL ELEVATION

(SCALE : 1:300)

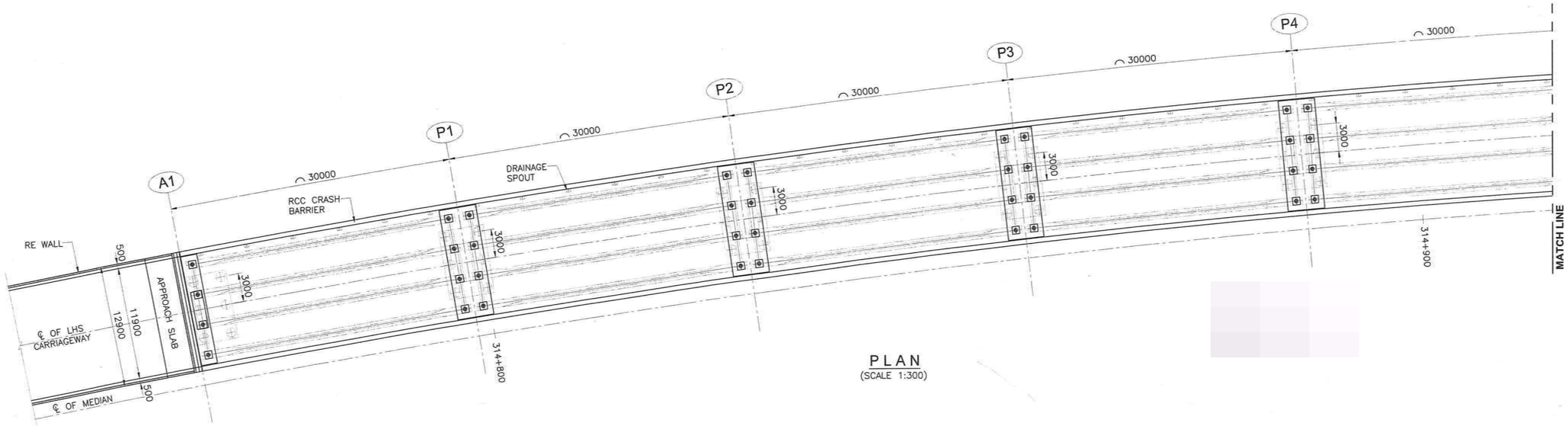

PLAN

(SCALE 1:300)

FOR APPROVAL

Rev.	Date	Description on Revisions
R1	10-08-2018	Shifting of Junction as per NHIDCL's requirement
R0	22-11-2017	FIRST SUBMISSION

Revisions

CLIENT:- NATIONAL HIGHWAYS & INFRASTRUCTURE DEVELOPMENT CORPORATION LTD

AUTHORITY'S ENGINEER: STUP Consultants P. Ltd & Ayoleeza Consultants P. Ltd. — AUTHORISED SIGNATORY — DATE

PROOF CHECK CONSULTANT: CETEST — AUTHORISED SIGNATORY — DATE

SAEFTY CONSULTANT:- Chaitanya Projects Consultancy Pvt. Ltd — AUTHORISED SIGNATORY — DATE

PROJECT: FOUR LANING OF NH-37 FROM RANGAGARA TO KALIABOR TINIALI (CH: 297.000 KM TO CH: 315.315 KM) IN NAGAON DISTRICT IN THE STATE OF ASSAM UNDER SARDP-NE, PHASE A ON EPC MODE

EPC CONTRACTOR:- SIMPLEX INFRASTRUCTURES LIMITED, 27, SHAKESPEARE SARANI, KOLKATA-17, INDIA

CONSULTANTS:- AECOM, 9th Floor, Infinity Tower C DLF Cyber City, DLF Phase II, Gurgaon-122002, Haryana, India

DRAWN	DESIGN	CHECKED BY	APPROVED BY
MANISH VERMA	S. YADAV	S. P. SINGH	S. KASTOOR

SCALE:- AS SHOWN

TITLE:- GENERAL ARRANGEMENT DRAWING FOR FLYOVER AT CH. 314+992 (SCH. B CH. 314+747)

DRAWING NO.:- AECOM-DELD15159-DD-DWG-FO-314+992-GAD-01 (SH 2 OF 6)

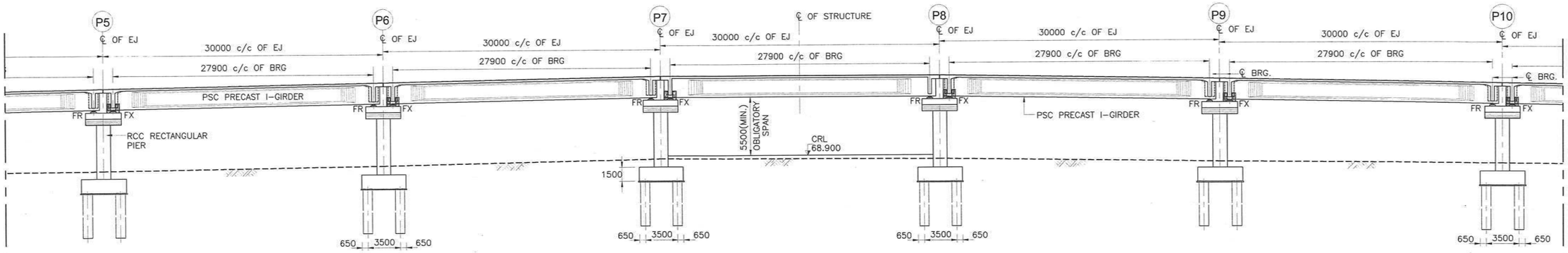

FRL	76.530	76.843	77.013	77.046	77.041	76.928	76.672
FRL OF RME	68.587	68.665	68.728	---	68.753	68.778	68.803
PILE CAP TOP	67.837	67.915	67.978	---	68.003	68.028	68.053
FOUNDING LVL.	36.337	36.415	36.478	---	36.503	36.528	36.553
DESIGN CHAINAGE AT PROPOSED CL	314+917.530	314+947.331	314+977.132	314+992	315+006.934	315+036.735	315+066.536

LONGITUDINAL ELEVATION
(SCALE : 1:300)

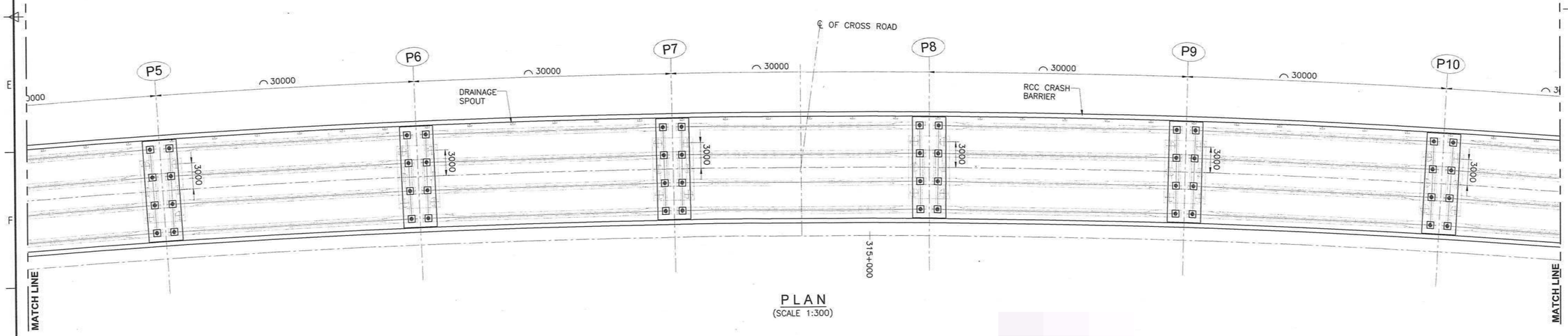

PLAN
(SCALE 1:300)

FOR APPROVAL

Rev.	Date	Description on Revisions
R1	10-08-2018	Shifting of Junction as per NHIDCL's requirement
R0	22-11-2017	FIRST SUBMISSION

Revisions

CLIENT:- NATIONAL HIGHWAYS & INFRASTRUCTURE DEVELOPMENT CORPORATION LTD

AUTHORITY'S ENGINEER: STUP Consultants P. Ltd & Ayoleeza Consultants P. Ltd.
AUTHORISED SIGNATORY | DATE

PROOF CHECK CONSULTANT:- CETEST CETESTING COMPANY PVT. LTD. KOLKATA
AUTHORISED SIGNATORY | DATE

SAEFTY CONSULTANT:- Chaitanya Projects Consultancy Pvt. Ltd
AUTHORISED SIGNATORY | DATE

PROJECT: FOUR LANING OF NH-37 FROM RANGAGARA TO KALIABOR TINIALI (CH: 297.000 KM TO CH: 315.315 KM) IN NAGAON DISTRICT IN THE STATE OF ASSAM UNDER SARDP-NE, PHASE A ON EPC MODE

EPC CONTRACTOR:- SIMPLEX INFRASTRUCTURES LIMITED, 27, SHAKESPEARE SARANI, KOLKATA-17, INDIA

CONSULTANTS:- AECOM, 9th Floor, Infinity Tower C DLF Cyber City, DLF Phase II, Gurgaon-122002, Haryana, India

MANISH VERMA	S. YADAV	S. P. SINGH	S. BASTOGI
DRAWN	DESIGN	CHECKED BY	APPROVED BY

SCALE:- AS SHOWN

TITLE:- GENERAL ARRANGEMENT DRAWING FOR FLYOVER AT CH. 314+992 (SCH. B CH. 314+747)

DRAWING NO.:- AECOM-DELD15159-DD-DWG-FO-314+992-GAD-01 (SH 3 OF 6)

TO RANGAGARA

TO KALIABOR TINIALI

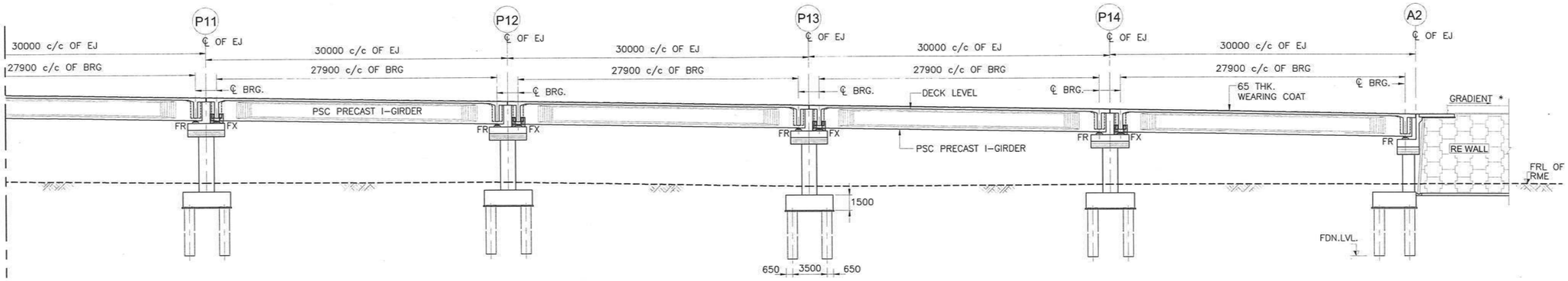

FRL	76.274	75.737	75.141	74.545	73.949
FRL OF RME	68.826	68.849	68.862	68.781	68.590
PILE CAP TOP	68.076	68.099	68.112	68.031	67.840
FOUNDING LVL.	36.576	36.599	36.612	36.531	36.340
DESIGN CHAINAGE AT PROPOSED CL	315+096.338	315+126.139	315+155.940	315+185.742	315+215.543

LONGITUDINAL ELEVATION

(SCALE : 1:300)

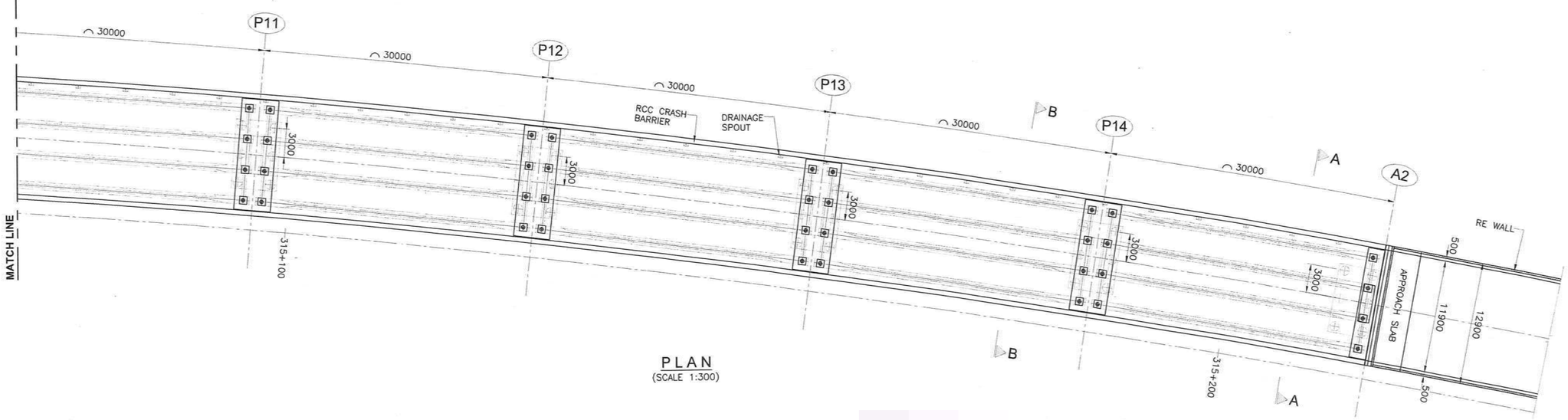

PLAN

(SCALE 1:300)

FOR APPROVAL

Rev.	Date	Description on Revisions
R1	10-08-2018	Shifting of Junction as per NHIDCL's requirement
R0	22-11-2017	FIRST SUBMISSION

Revisions

CLIENT:- NATIONAL HIGHWAYS & INFRASTRUCTURE DEVELOPMENT CORPORATION LTD

AUTHORITY'S ENGINEER: STUP Consultants P. Ltd & Ayoleeza Consultants P. Ltd.

AUTHORISED SIGNATORY | DATE

PROOF CHECK CONSULTANT: K.E. TESTING COMPANY PVT. LTD.

AUTHORISED SIGNATORY | DATE

SAEFTY CONSULTANT:- Chaitanya Projects Consultancy Pvt. Ltd

AUTHORISED SIGNATORY | DATE

PROJECT: FOUR LANING OF NH-37 FROM RANGAGARA TO KALIABOR TINIALI (CH: 297.000 KM TO CH: 315.315 KM) IN NAGAON DISTRICT IN THE STATE OF ASSAM UNDER SARDP-NE, PHASE A ON EPC MODE

EPC CONTRACTOR:- SIMPLEX INFRASTRUCTURES LIMITED, 27, SHAKESPEARE SARANI, KOLKATA-17, INDIA

CONSULTANTS:- AECOM, 9th Floor, Infinity Tower C DLF Cyber City, DLF Phase II, Gurgaon-122002, Haryana, India

DRAWN	DESIGN	CHECKED BY	APPROVED BY
MANISH VERMA	S. YADAV	S.P. SINGH	S. RASTOGI

SCALE:- AS SHOWN

TITLE:- GENERAL ARRANGEMENT DRAWING FOR FLYOVER AT CH. 314+992 (SCH. B CH. 314+747)

DRAWING NO.:- AECOM-DELD15159-DD-DWG-FO-314+992-GAD-01 (SH 4 OF 6)

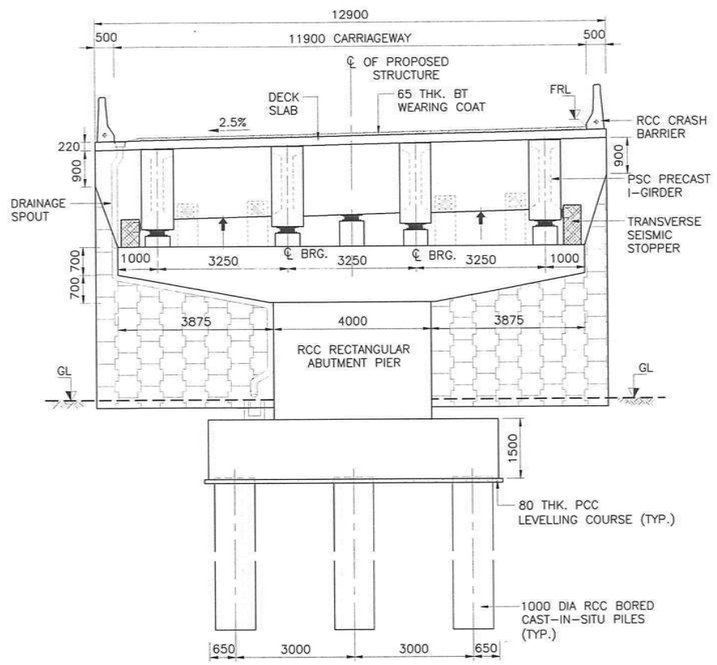

SECTION A-A
(SCALE : 1:100)

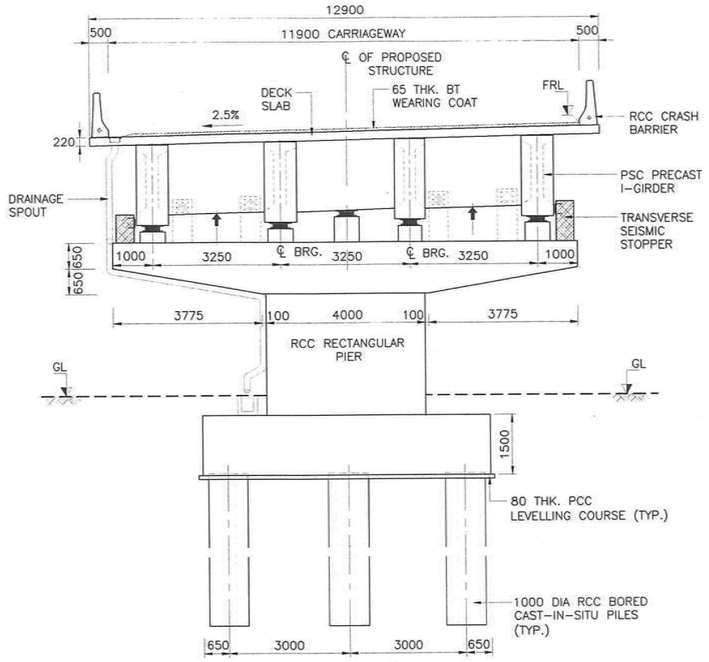

SECTION B-B
(SCALE : 1:100)

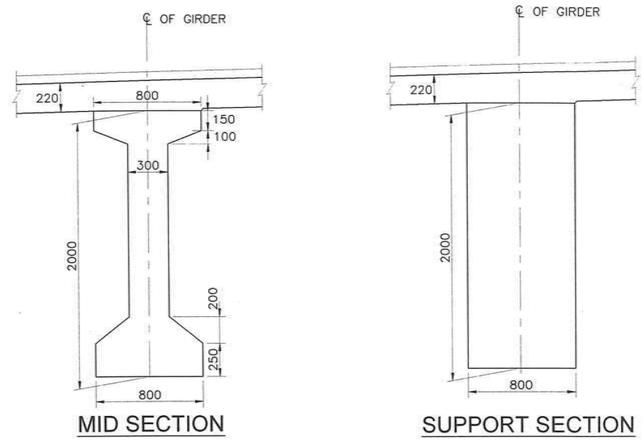

DETAIL OF PSC PRECAST I-GIRDER
(SCALE 1:30)

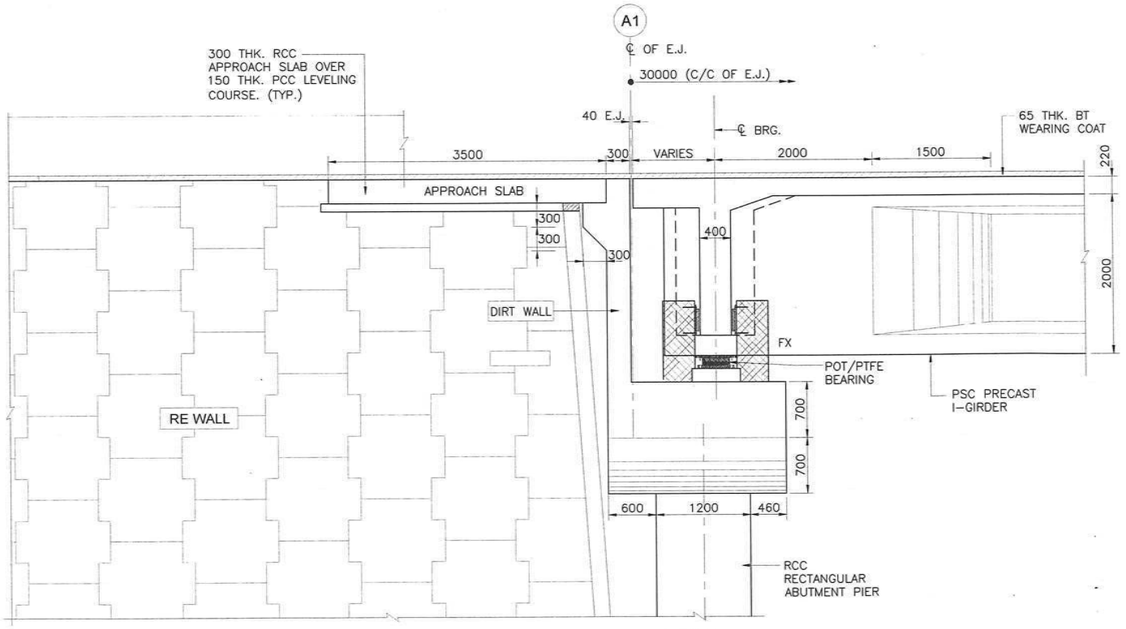

DETAIL-1
(SCALE 1:50)

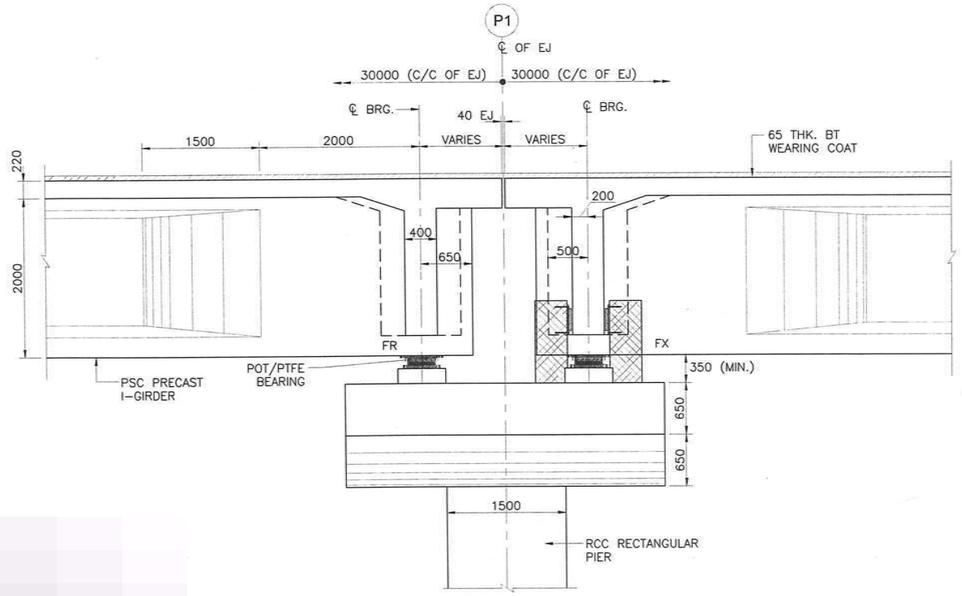

DETAIL-2
(SCALE 1:50)

FOR APPROVAL

Rev.	Date	Description on Revisions
R1	10-08-2018	Shifting of Junction as per NHIDCL's requirement
R0	22-11-2017	FIRST SUBMISSION

Revisions

CLIENT:- NATIONAL HIGHWAYS & INFRASTRUCTURE DEVELOPMENT CORPORATION LTD

AUTHORITY'S ENGINEER: STUP Consultants P. Ltd & Ayoleeza Consultants P. Ltd. — AUTHORISED SIGNATORY | DATE

PROOF CHECK CONSULTANT: — AUTHORISED SIGNATORY | DATE

SAEFTY CONSULTANT:- Chaitanya Projects Consultancy Pvt. Ltd — AUTHORISED SIGNATORY | DATE

PROJECT: FOUR LANING OF NH-37 FROM RANGAGARA TO KALIABOR TINIALI (CH: 297.000 KM TO CH: 315.315 KM) IN NAGAON DISTRICT IN THE STATE OF ASSAM UNDER SARDP-NE, PHASE A ON EPC MODE

EPC CONTRACTOR:- SIMPLEX INFRASTRUCTURES LIMITED, 27, SHAKESPEARE SARANI, KOLKATA-17, INDIA

CONSULTANTS:- AECOM, 9th Floor, Infinity Tower C DLF Cyber City, DLF Phase II, Gurgaon-122002, Haryana, India

MANISH VERMA	S. YADAV	S. P. SINGH	S. BALLOGI
DRAWN	DESIGN	CHECKED BY	APPROVED BY

SCALE:- AS SHOWN

TITLE:- GENERAL ARRANGEMENT DRAWING FOR FLYOVER AT CH. 314+992 (SCH. B CH. 314+747)

DRAWING NO.:- AECOM-DELD15159-DD-DWG-FO-314+992-GAD-01 (SH 5 OF 6)

BORE HOLE DETAILS

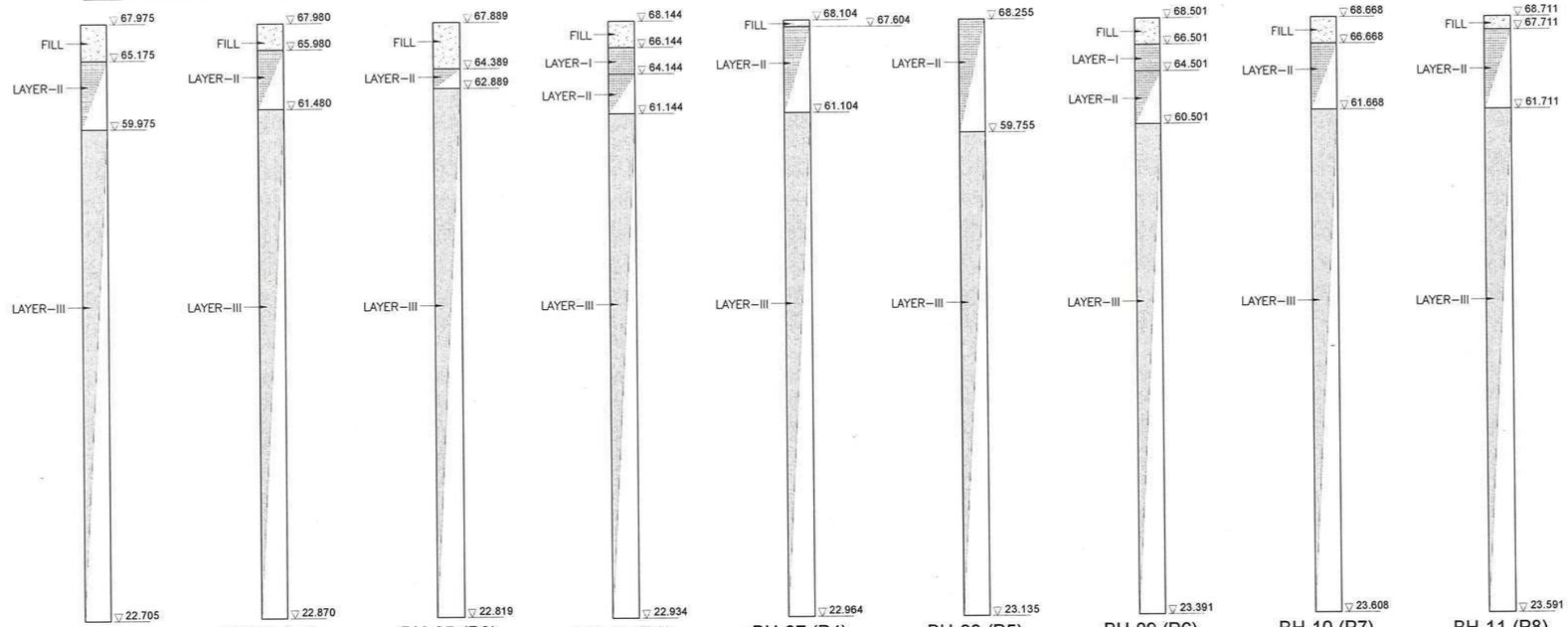

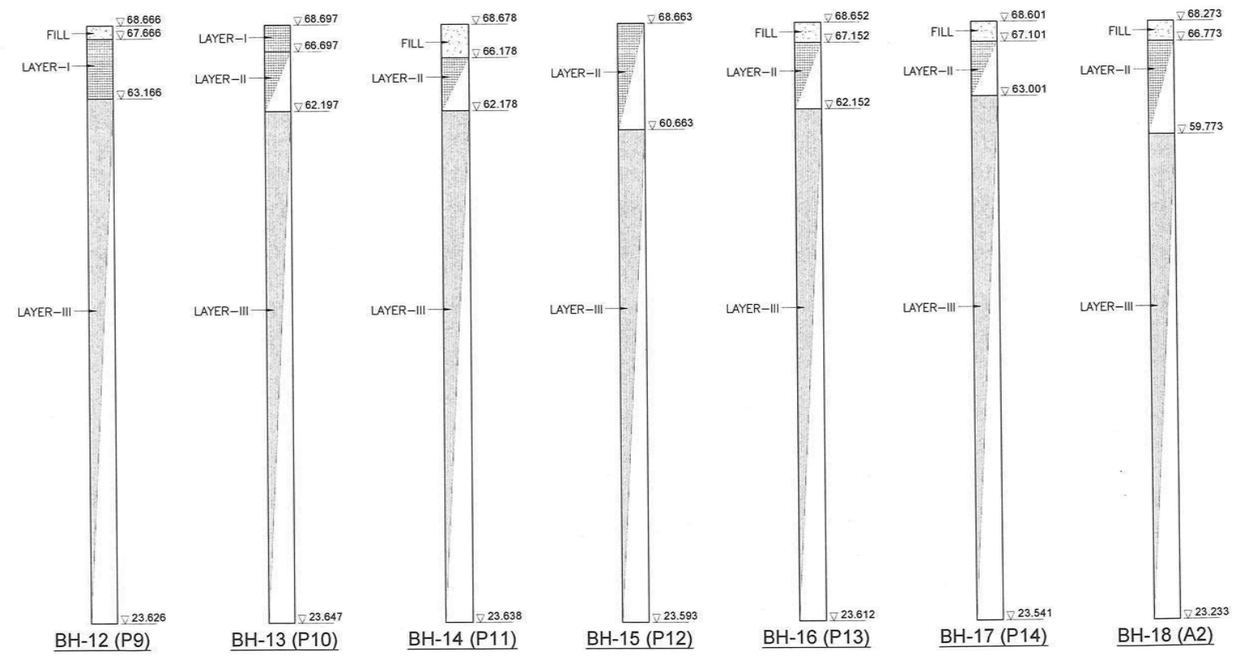

NOTES:-

1. ALL DIMENSIONS ARE IN MILLIMETERS, LEVELS ARE IN METERS UNLESS OTHERWISE MENTIONED.
2. NO DIMENSION SHALL BE MEASURED FROM THE DRAWINGS. ONLY WRITTEN DIMENSIONS SHALL BE FOLLOWED.
3. THE DRAWING SHALL BE READ IN CONJUNCTION WITH RELEVANT HIGHWAY PLAN AND PROFILE DRAWINGS. FRL, BED LEVEL, CAMBER/SUPERELEVATION AND LAYOUT SHALL ALSO BE VERIFIED AT SITE BEFORE EXECUTION. DISCEPANCIES SHALL BE BROUGHT TO THE NOTICE OF THE ENGINEER FOR REVISION IN DRAWINGS, IF ANY.
4. CHAINAGE OF THE STRUCTURE IS AT THE CENTER LINE OF THE PROPOSED STRUCTURE.
5. THE REINFORCEMENT SHALL BE HYSD BARS OF GRADE DESIGNATION Fe 500D CONFORMING TO IS 1786-2008 AND IRC 112-2011.
6. CONCRETE SHALL BE DESIGN MIX WITH A MINIMUM 28 DAYS CHARACTERISTIC CUBE STRENGTH FOR DIFFERENT ELEMENTS AS FOLLOWS:
   - a.PSC PRECAST I-GIRDER — M45
   - b.RCC DECK SLAB & CROSS GIRDER — M40
   - c.RCC ABUT. & ABUT. CAP — M35
   - d.RCC PILE & PILE CAP — M35
   - e.RCC CRASH BARRIER — M40
   - f.RCC APPROACH SLAB — M30
   - g.PCC LEVELING COURSE — M15
   - h.RCC PEDESTALS — M40
   - i. RCC SEISMIC STOPPER — M35
7. CLEAR COVER TO OUTER STEEL SHALL BE AS FOLLOWS:-
   - a.PSC PRECAST I-GIRDER — 40MM
   - b.RCC DECK SLAB — 40MM
   - c.RCC ABUT. / PIER — 40MM
   - d.RCC ABUT. / PIER CAP — 40MM
   - e.RCC SEISMIC STOPPERS — 40MM
   - f.RCC PILE & PILE CAP — 75MM
   - g.RCC CRASH BARRIER — 40MM
8. 65 THK. BITUMINOUS WEARING COAT SHALL BE ADOPTED IN CONFORMITY WITH SECTION 2702 OF MORTH SPECIFICATIONS.
9. DRAINAGE SPOUT 100MM DIA SPACED 5000MM C/C SHALL BE PROVIDED IN SUPERSTRUCTURE.
10. CONDITION OF EXPOSURE IS MODERATE.
11. THIS STRUCTURE LIES IN SEISMIC ZONE V.
12. THE STRUCTURE HAS BE DESIGNED FOR LIVE LOAD COMBINATIONS CONFORMING TO IRC: 6-2014.
13. SINGLE STRIP SEAL TYPE EXPANSION JOINT SHALL BE PROVIDED AS PER MODIFIED INTERIM SPECIFICATION FOR EXPANSION JOINTS ISSUED VIDE "MORTH" CIRCULAR NO. RW/NH-34059/1/98-S&R DATED 30-11-2000 & 25-01-2001.
14. TAR PAPER BEARING SHALL BE PROVIDED BETWEEN APPROACH SLAB & BRACKET.
15. THE MAXIMUM PILE LOAD (TONNES) AS PER DESIGN IS:

ABUTMENT		PIER		
NORMAL		NORMAL		
A1	A2	P1-P4	P5-P10	P11-P14
210.80		255.44	253.22	244.23
SEISMIC		SEISMIC		
282.75		353.24	352.69	336.28

WHICH IS LESS THAN PILE LOAD CAPACITY AT FOUNDING LEVEL AS PER GEOTECH REPORT.

REFERENCE DRAWINGS:

1.) SUPERSTRUCTURE:-
AECOM-DELD15159-DD-DWG-FO-314+992-SUP-01 (SH1 TO 16)

2.) SUBSTRUCTURE:-
AECOM-DELD15159-DD-DWG-FO-314+992-SUB-01 (SH1 TO 5)
AECOM-DELD15159-DD-DWG-FO-314+992-SUB-02 (SH1 TO 5)
AECOM-DELD15159-DD-DWG-FO-314+992-SUB-03 (SH1 TO 5)
AECOM-DELD15159-DD-DWG-FO-314+992-SUB-04 (SH1 TO 5)

3.) MISCELLANEOUS DWGS.
AECOM-DELD15159--MISC-01

LEGEND FOR BORE HOLE

SYMBOL	DESCRIPTION
	FILL - (yellowish gray silty sand/silty clay with pebble, gravels & kankar)
	LAYER-I - yellowish grey soft to medium stiff clayey silt/silty clay
	LAYER-II - yellowish grey loose to medium dense clayey sandy silt/silty sand
	LAYER-III - yellowish grey/brownish yellow medium dense to very dense silty sand with kankars in higher depths

LEGEND:-

FRL	–	FINISHED ROAD LEVEL
LHS	–	LEFT HAND SIDE
RHS	–	RIGHT HAND SIDE
GL	–	GROUND LEVEL
FDN	–	FOUNDATION
LVL	–	LEVEL
EJ	–	EXPANSION JOINT
CRL	–	CROSS ROAD LEVEL
FX	–	FIXED BEARING
FR	–	FREE BEARING

FOR APPROVAL

Rev.	Date	Description on Revisions
R1	10-08-2018	Shifting of Junction as per NHIDCL's requirement
R0	22-11-2017	FIRST SUBMISSION

Revisions

CLIENT:- NATIONAL HIGHWAYS & INFRASTRUCTURE DEVELOPMENT CORPORATION LTD

AUTHORITY'S ENGINEER: STUP Consultants P. Ltd & Ayoleeza Consultants P. Ltd.
AUTHORISED SIGNATORY | DATE

PROOF CHECK CONSULTANT: CETTIGT
AUTHORISED SIGNATORY | DATE

SAEFTY CONSULTANT:- Chaitanya Projects Consultancy Pvt. Ltd
AUTHORISED SIGNATORY | DATE

PROJECT: FOUR LANING OF NH-37 FROM RANGAGARA TO KALIABOR TINIALI (CH: 297.000 KM TO CH: 315.315 KM) IN NAGAON DISTRICT IN THE STATE OF ASSAM UNDER SARDP-NE, PHASE A ON EPC MODE

EPC CONTRACTOR:- SIMPLEX INFRASTRUCTURES LIMITED, 27, SHAKESPEARE SARANI, KOLKATA-17, INDIA

CONSULTANTS:- AECOM, 9th Floor, Infinity Tower C DLF Cyber City, DLF Phase II, Gurgaon-122002, Haryana, India
DRAWN: MANISH VERMA | DESIGN: S. YADAV | CHECKED BY: S.P. SINGH | APPROVED BY: S. RASTOGI

SCALE:- AS SHOWN

TITLE:- GENERAL ARRANGEMENT DRAWING FOR FLYOVER AT CH. 314+992 (SCH. B CH. 314+747)

DRAWING NO.:- AECOM-DELD15159-DD-DWG-FO-314+992-GAD-01 (SH 6 OF 6)

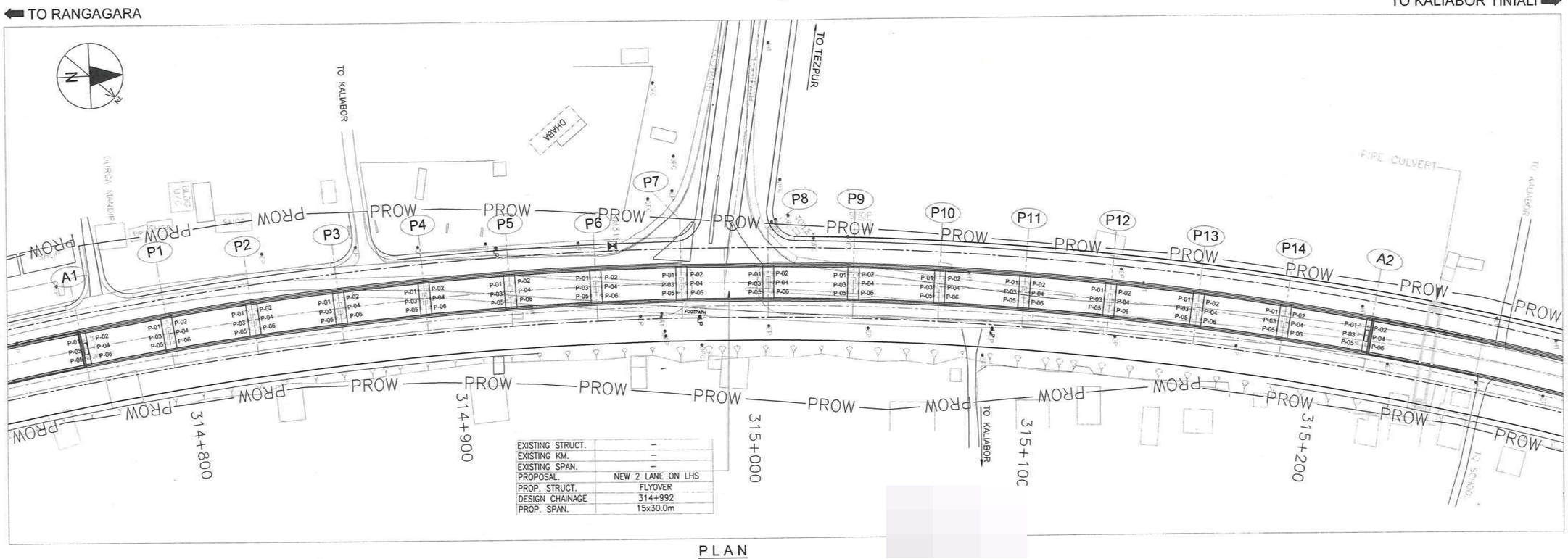

EXISTING STRUCT.	-
EXISTING KM.	-
EXISTING SPAN.	-
PROPOSAL.	NEW 2 LANE ON LHS
PROP. STRUCT.	FLYOVER
DESIGN CHAINAGE	314+992
PROP. SPAN.	15x30.0m

PLAN

PILE COORDINATES	
NOS.	ABUTMENT A1
01	X = 492844.565 Y = 2935064.991
02	X = 492844.109 Y = 2935067.956
03	X = 492847.530 Y = 2935065.448
04	X = 492847.074 Y = 2935068.413
05	X = 492850.495 Y = 2935065.904
06	X = 492850.039 Y = 2935068.869

PILE COORDINATES	
NOS.	PIER P1
01	X = 492840.800 Y = 2935092.206
02	X = 492840.354 Y = 2935095.678
03	X = 492843.775 Y = 2935092.588
04	X = 492843.330 Y = 2935096.060
05	X = 492846.751 Y = 2935092.970
06	X = 492846.305 Y = 2935096.442

PILE COORDINATES	
NOS.	PIER P2
01	X = 492837.380 Y = 2935122.085
02	X = 492837.021 Y = 2935125.567
03	X = 492840.364 Y = 2935122.393
04	X = 492840.006 Y = 2935125.875
05	X = 492843.349 Y = 2935122.700
06	X = 492842.990 Y = 2935126.182

PILE COORDINATES	
NOS.	PIER P3
01	X = 492834.704 Y = 2935152.040
02	X = 492834.432 Y = 2935155.530
03	X = 492837.695 Y = 2935152.273
04	X = 492837.423 Y = 2935155.762
05	X = 492840.685 Y = 2935152.506
06	X = 492840.414 Y = 2935155.995

PILE COORDINATES	
NOS.	PIER P4
01	X = 492832.772 Y = 2935182.052
02	X = 492832.587 Y = 2935185.547
03	X = 492835.767 Y = 2935182.210
04	X = 492835.583 Y = 2935185.705
05	X = 492838.763 Y = 2935182.368
06	X = 492838.579 Y = 2935185.863

PILE COORDINATES	
NOS.	PIER P5
01	X = 492831.586 Y = 2935212.103
02	X = 492831.489 Y = 2935215.601
03	X = 492834.584 Y = 2935212.186
04	X = 492834.487 Y = 2935215.685
05	X = 492837.583 Y = 2935212.269
06	X = 492837.486 Y = 2935215.768

PILE COORDINATES	
NOS.	PIER P6
01	X = 492831.146 Y = 2935242.174
02	X = 492831.137 Y = 2935245.674
03	X = 492834.146 Y = 2935242.182
04	X = 492834.137 Y = 2935245.682
05	X = 492837.146 Y = 2935242.190
06	X = 492837.137 Y = 2935245.690

PILE COORDINATES	
NOS.	PIER P7
01	X = 492831.453 Y = 2935272.246
02	X = 492831.531 Y = 2935275.745
03	X = 492834.453 Y = 2935272.179
04	X = 492834.531 Y = 2935275.678
05	X = 492837.452 Y = 2935272.112
06	X = 492837.530 Y = 2935275.611

PILE COORDINATES	
NOS.	PIER P8
01	X = 492832.507 Y = 2935302.302
02	X = 492832.673 Y = 2935305.798
03	X = 492835.504 Y = 2935302.160
04	X = 492835.670 Y = 2935305.656
05	X = 492838.501 Y = 2935302.018
06	X = 492838.666 Y = 2935305.514

PILE COORDINATES	
NOS.	PIER P9
01	X = 492834.307 Y = 2935332.322
02	X = 492834.560 Y = 2935335.813
03	X = 492837.300 Y = 2935332.105
04	X = 492837.553 Y = 2935335.596
05	X = 492840.292 Y = 2935331.889
06	X = 492840.545 Y = 2935335.379

PILE COORDINATES	
NOS.	PIER P10
01	X = 492836.852 Y = 2935362.288
02	X = 492837.193 Y = 2935365.772
03	X = 492839.838 Y = 2935361.997
04	X = 492840.178 Y = 2935365.480
05	X = 492842.824 Y = 2935361.705
06	X = 492843.164 Y = 2935365.189

PILE COORDINATES	
NOS.	PIER P11
01	X = 492840.141 Y = 2935392.182
02	X = 492840.568 Y = 2935395.656
03	X = 492843.118 Y = 2935391.816
04	X = 492843.545 Y = 2935395.290
05	X = 492846.096 Y = 2935391.450
06	X = 492846.523 Y = 2935394.924

PILE COORDINATES	
NOS.	PIER P12
01	X = 492844.170 Y = 2935421.985
02	X = 492844.684 Y = 2935425.447
03	X = 492847.138 Y = 2935421.545
04	X = 492847.652 Y = 2935425.007
05	X = 492850.105 Y = 2935421.104
06	X = 492850.619 Y = 2935424.566

PILE COORDINATES	
NOS.	PIER P13
01	X = 492848.939 Y = 2935451.679
02	X = 492849.539 Y = 2935455.127
03	X = 492851.894 Y = 2935451.164
04	X = 492852.495 Y = 2935454.612
05	X = 492854.850 Y = 2935450.650
06	X = 492855.450 Y = 2935454.098

PILE COORDINATES	
NOS.	PIER P14
01	X = 492854.443 Y = 2935481.245
02	X = 492855.129 Y = 2935484.677
03	X = 492857.385 Y = 2935480.656
04	X = 492858.071 Y = 2935484.089
05	X = 492860.327 Y = 2935480.068
06	X = 492861.013 Y = 2935483.500

PILE COORDINATES	
NOS.	ABUTMENT A2
01	X = 492860.217 Y = 2935508.617
02	X = 492860.879 Y = 2935511.543
03	X = 492863.143 Y = 2935507.955
04	X = 492863.805 Y = 2935510.881
05	X = 492866.069 Y = 2935507.294
06	X = 492866.731 Y = 2935510.220

FOR APPROVAL

Rev.	Date	Description on Revisions
R0	09-08-2018	REVISED SUBMISSION

Revisions

CLIENT:- NATIONAL HIGHWAYS & INFRASTRUCTURE DEVELOPMENT CORPORATION LTD

AUTHORITY'S ENGINEER: STUP Consultants P. Ltd & Ayoleeza Consultants P. Ltd.

PROOF CHECK CONSULTANT:- CTEST

SAEFTY CONSULTANT:- Chaitanya Projects Consultancy Pvt. Ltd

PROJECT: FOUR LANING OF NH-37 FROM RANGAGARA TO KALIABOR TINIALI (CH: 297.000 KM TO CH: 315.315 KM) IN NAGAON DISTRICT IN THE STATE OF ASSAM UNDER SARDP-NE, PHASE A ON EPC MODE

EPC CONTRACTOR:- SIMPLEX INFRASTRUCTURES LIMITED, 27, SHAKESPEARE SARANI, KOLKATA-17, INDIA

CONSULTANTS:- AECOM, 9th Floor, Infinity Tower C DLF Cyber City DLF Phase II, Gurgaon-122002, Haryana, India

MANISH VERMA	S. YADAV	E.P. SINGH	S.K. SINGH
DRAWN	DESIGN	CHECKED BY	APPROVED BY

SCALE:- AS SHOWN

TITLE:- COORDINATES FOR FLYOVER AT CH. 314+992 (SCH. B CH. 314+747)

DRAWING NO.:- AECOM-DELD15159-DD-DWG-FO-314+992-CRD-01 REV. R0

GENERAL ARRANGEMENT DRAWING FOR FLYOVER AT CH. 314+992

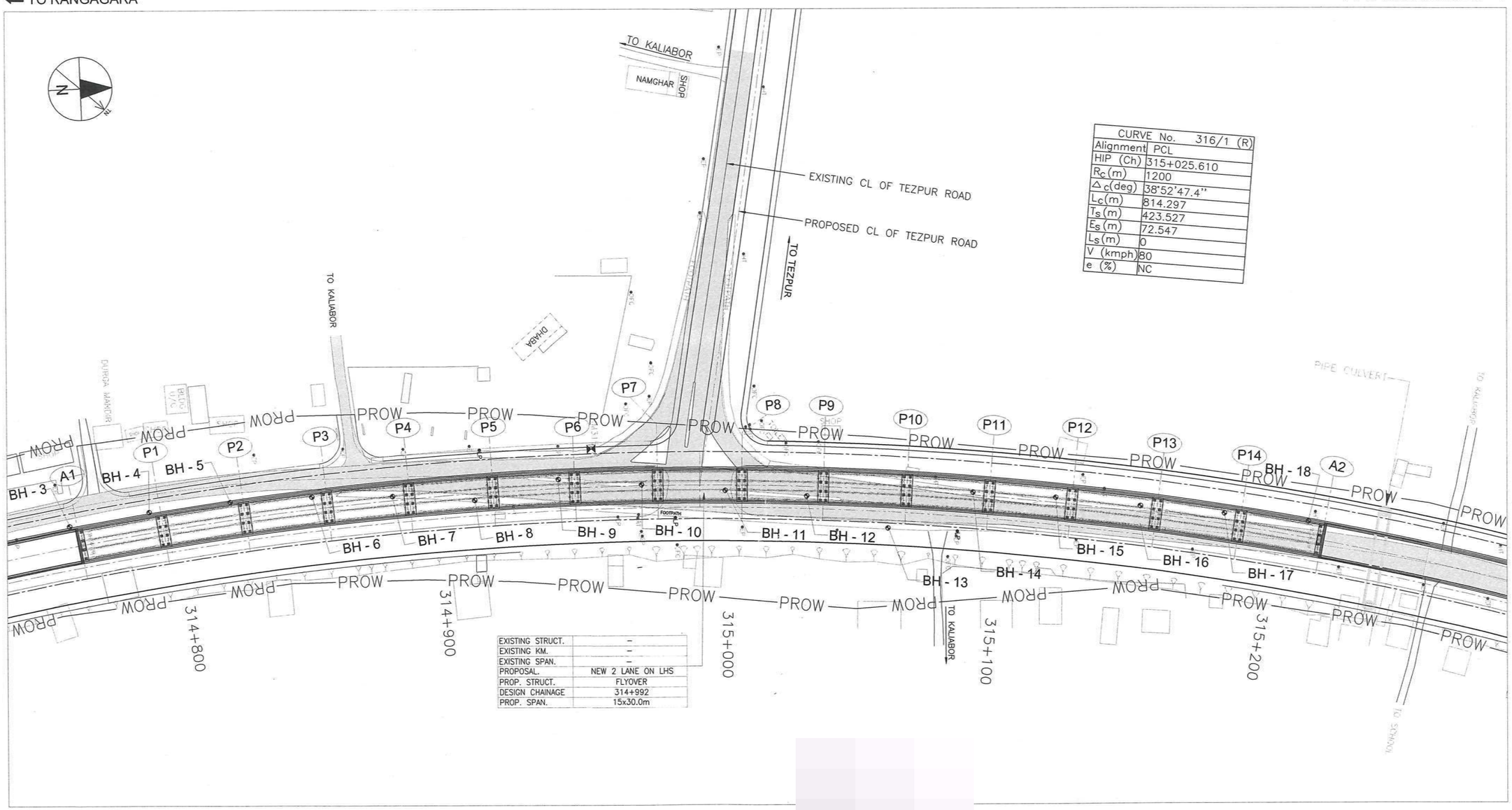

CURVE No.	316/1 (R)
Alignment	PCL
HIP (Ch)	315+025.610
R_c (m)	1200
Δ_c (deg)	38°52'47.4"
L_c (m)	814.297
T_s (m)	423.527
E_s (m)	72.547
L_s (m)	0
V (kmph)	80
e (%)	NC

EXISTING STRUCT.	–
EXISTING KM.	–
EXISTING SPAN.	–
PROPOSAL.	NEW 2 LANE ON LHS
PROP. STRUCT.	FLYOVER
DESIGN CHAINAGE	314+992
PROP. SPAN.	15x30.0m

KEY PLAN

FOR APPROVAL

Rev.	Date	Description on Revisions
R1	10-08-2018	Shifting of Junction as per NHIDCL's requirement
R0	22-11-2017	FIRST SUBMISSION

Revisions

CLIENT:- NATIONAL HIGHWAYS & INFRASTRUCTURE DEVELOPMENT CORPORATION LTD

AUTHORITY'S ENGINEER: STUP Consultants P. Ltd & Ayoleeza Consultants P. Ltd. — AUTHORISED SIGNATORY — DATE

PROOF CHECK CONSULTANT: CETEST — AUTHORISED SIGNATORY — DATE

SAEFTY CONSULTANT:- Chaitanya Projects Consultancy Pvt. Ltd — AUTHORISED SIGNATORY — DATE

PROJECT: FOUR LANING OF NH-37 FROM RANGAGARA TO KALIABOR TINIALI (CH: 297.000 KM TO CH: 315.315 KM) IN NAGAON DISTRICT IN THE STATE OF ASSAM UNDER SARDP-NE, PHASE A ON EPC MODE

EPC CONTRACTOR:- SIMPLEX INFRASTRUCTURES LIMITED, 27, SHAKESPEARE SARANI, KOLKATA-17, INDIA

CONSULTANTS:- AECOM, 9th Floor, Infinity Tower C DLF Cyber City, DLF Phase II, Gurgaon-122002, Haryana, India

DRAWN	DESIGN	CHECKED BY	APPROVED BY
MANISH VERMA	S. YADAV	S. P. SINGH	S. RASTOGI

SCALE:- AS SHOWN

TITLE:- GENERAL ARRANGEMENT DRAWING FOR FLYOVER AT CH. 314+992 (SCH. B CH. 314+747)

DRAWING NO.:- AECOM-DELD15159-DD-DWG-FO-314+992-GAD-01 (SH 1 OF 6)

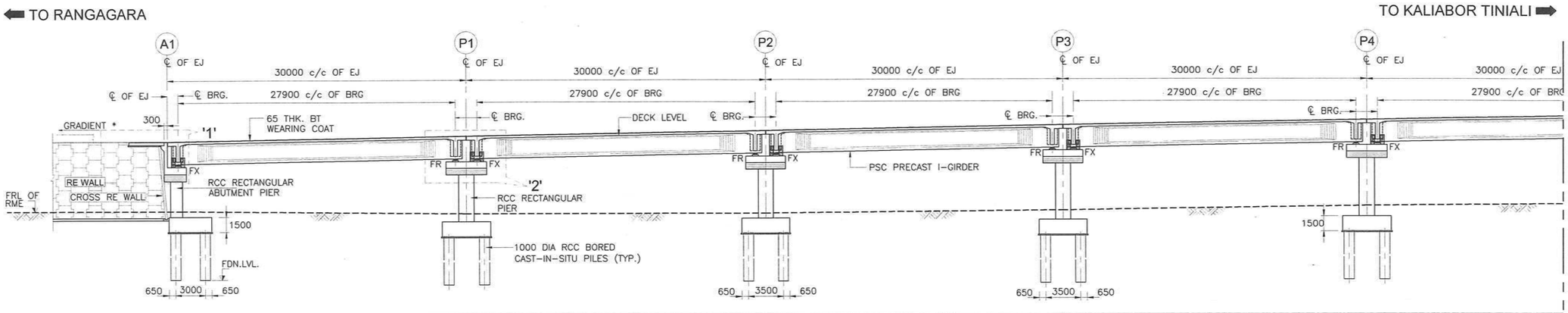

	A1	P1	P2	P3	P4
FRL	73.711	74.307	74.903	75.498	76.076
FRL OF RME	68.352	68.340	68.364	68.431	68.509
PILE CAP TOP	67.602	67.590	67.614	67.681	67.759
FOUNDING LVL.	36.102	36.090	36.114	36.181	36.259
DESIGN CHAINAGE AT PROPOSED CL	314+768.523	314+798.324	314+828.126	314+857.927	314+887.728

LONGITUDINAL ELEVATION

(SCALE : 1:300)

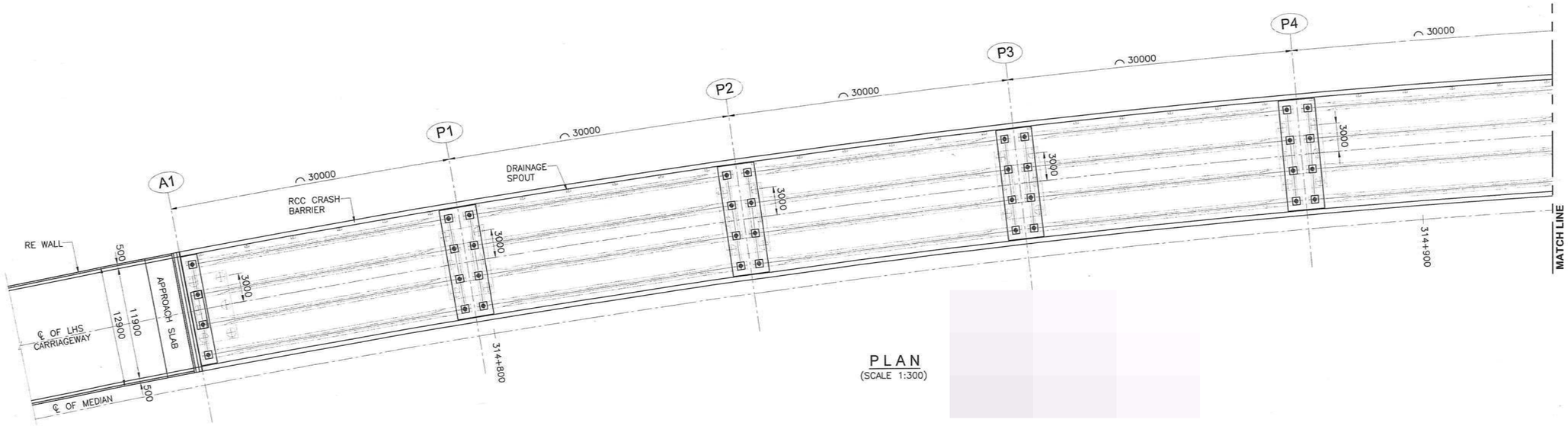

PLAN

(SCALE 1:300)

FOR APPROVAL

Rev.	Date	Description on Revisions
R1	10-08-2018	Shifting of Junction as per NHIDCL's requirement
R0	22-11-2017	FIRST SUBMISSION

Revisions

CLIENT:- NATIONAL HIGHWAYS & INFRASTRUCTURE DEVELOPMENT CORPORATION LTD

AUTHORITY'S ENGINEER: STUP Consultants P. Ltd & Ayoleeza Consultants P. Ltd.

PROOF CHECK CONSULTANT: CETEST

SAEFTY CONSULTANT:- Chaitanya Projects Consultancy Pvt. Ltd

PROJECT: FOUR LANING OF NH-37 FROM RANGAGARA TO KALIABOR TINIALI (CH: 297.000 KM TO CH: 315.315 KM) IN NAGAON DISTRICT IN THE STATE OF ASSAM UNDER SARDP-NE, PHASE A ON EPC MODE

EPC CONTRACTOR:- SIMPLEX INFRASTRUCTURES LIMITED, 27, SHAKESPEARE SARANI, KOLKATA-17, INDIA

CONSULTANTS:- AECOM, 9th Floor, Infinity Tower C DLF Cyber City, DLF Phase II, Gurgaon-122002, Haryana, India

MANISH VERMA	S. YADAV	S. P. SINGH	S. KASTOOR
DRAWN	DESIGN	CHECKED BY	APPROVED BY

SCALE:- AS SHOWN

TITLE:- GENERAL ARRANGEMENT DRAWING FOR FLYOVER AT CH. 314+992 (SCH. B CH. 314+747)

DRAWING NO.:- AECOM-DELD15159-DD-DWG-FO-314+992-GAD-01 (SH 2 OF 6)

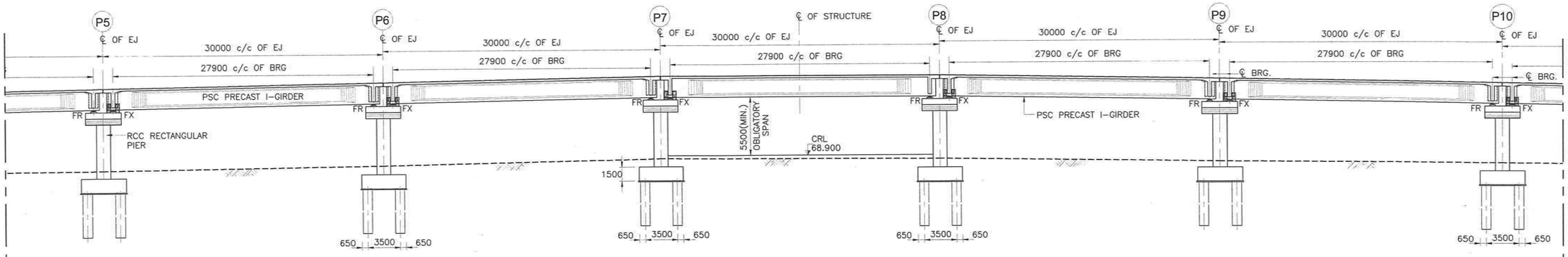

FRL	76.530	76.843	77.013	77.046	77.041	76.928	76.672
FRL OF RME	68.587	68.665	68.728	---	68.753	68.778	68.803
PILE CAP TOP	67.837	67.915	67.978	---	68.003	68.028	68.053
FOUNDING LVL.	36.337	36.415	36.478	---	36.503	36.528	36.553
DESIGN CHAINAGE AT PROPOSED CL	314+917.530	314+947.331	314+977.132	314+992	315+006.934	315+036.735	315+066.536

LONGITUDINAL ELEVATION

(SCALE : 1:300)

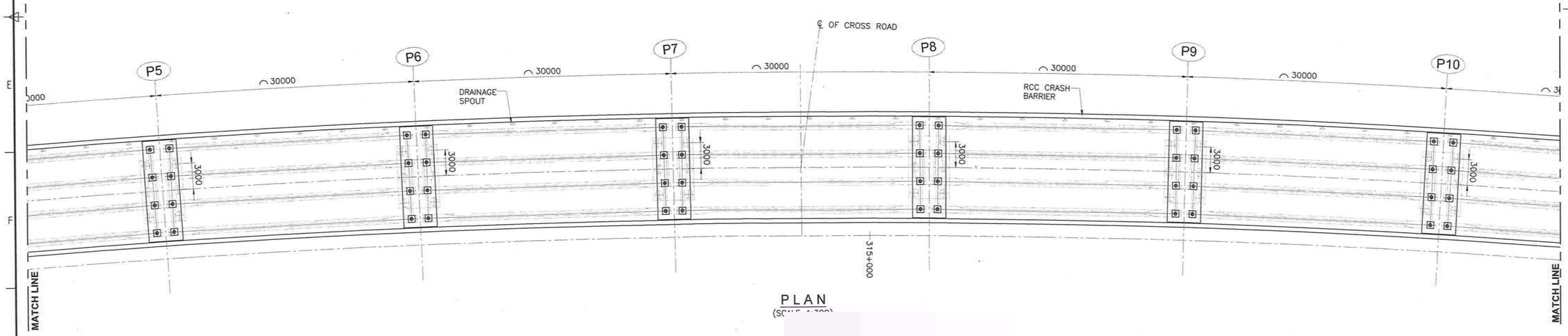

PLAN

(SCALE : 1:300)

FOR APPROVAL

Rev.	Date	Description on Revisions
R1	10-08-2018	Shifting of Junction as per NHIDCL's requirement
R0	22-11-2017	FIRST SUBMISSION

Revisions

CLIENT:- NATIONAL HIGHWAYS & INFRASTRUCTURE DEVELOPMENT CORPORATION LTD

AUTHORITY'S ENGINEER: STUP Consultants P. Ltd & Ayoleeza Consultants P. Ltd.

AUTHORISED SIGNATORY | DATE

PROOF CHECK CONSULTANT:- CETEST Engineering Consultants, CETESTING COMPANY PVT. LTD. KOLKATA

AUTHORISED SIGNATORY | DATE

SAEFTY CONSULTANT:- Chaitanya Projects Consultancy Pvt. Ltd

AUTHORISED SIGNATORY | DATE

PROJECT: FOUR LANING OF NH-37 FROM RANGAGARA TO KALIABOR TINIALI (CH: 297.000 KM TO CH: 315.315 KM) IN NAGAON DISTRICT IN THE STATE OF ASSAM UNDER SARDP-NE, PHASE A ON EPC MODE

EPC CONTRACTOR:- SIMPLEX INFRASTRUCTURES LIMITED, 27, SHAKESPEARE SARANI, KOLKATA-17, INDIA

CONSULTANTS:- AECOM, 9th Floor, Infinity Tower C DLF Cyber City, DLF Phase II, Gurgaon-122002, Haryana, India

MANISH VERMA	S. YADAV	S. P. SINGH	A. BASTOGI
DRAWN	DESIGN	CHECKED BY	APPROVED BY

SCALE:- AS SHOWN

TITLE:- GENERAL ARRANGEMENT DRAWING FOR FLYOVER AT CH. 314+992 (SCH. B CH. 314+747)

DRAWING NO.:- AECOM-DELD15159-DD-DWG-FO-314+992-GAD-01 (SH 3 OF 6)

TO RANGAGARA

TO KALIABOR TINIALI

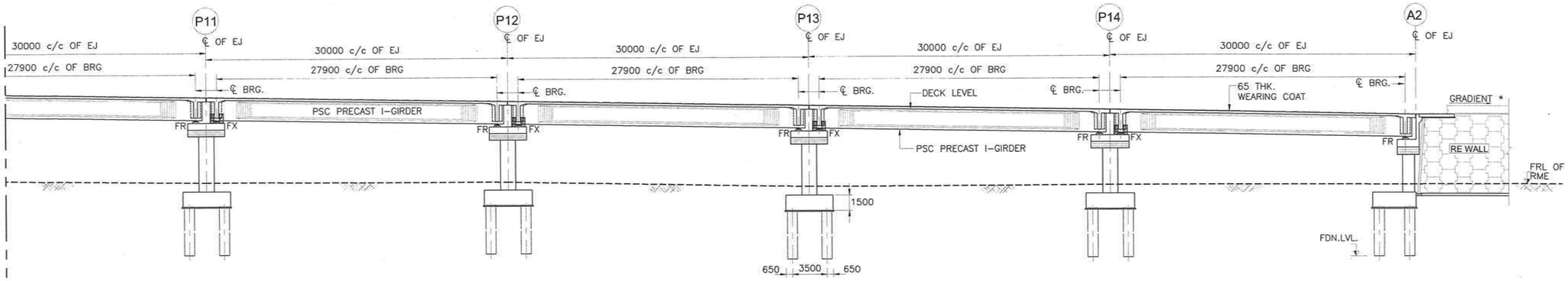

FRL	76.274	75.737	75.141	74.545	73.949
FRL OF RME	68.826	68.849	68.862	68.781	68.590
PILE CAP TOP	68.076	68.099	68.112	68.031	67.840
FOUNDING LVL.	36.576	36.599	36.612	36.531	36.340
DESIGN CHAINAGE AT PROPOSED CL	315+096.338	315+126.139	315+155.940	315+185.742	315+215.543

LONGITUDINAL ELEVATION

(SCALE : 1:300)

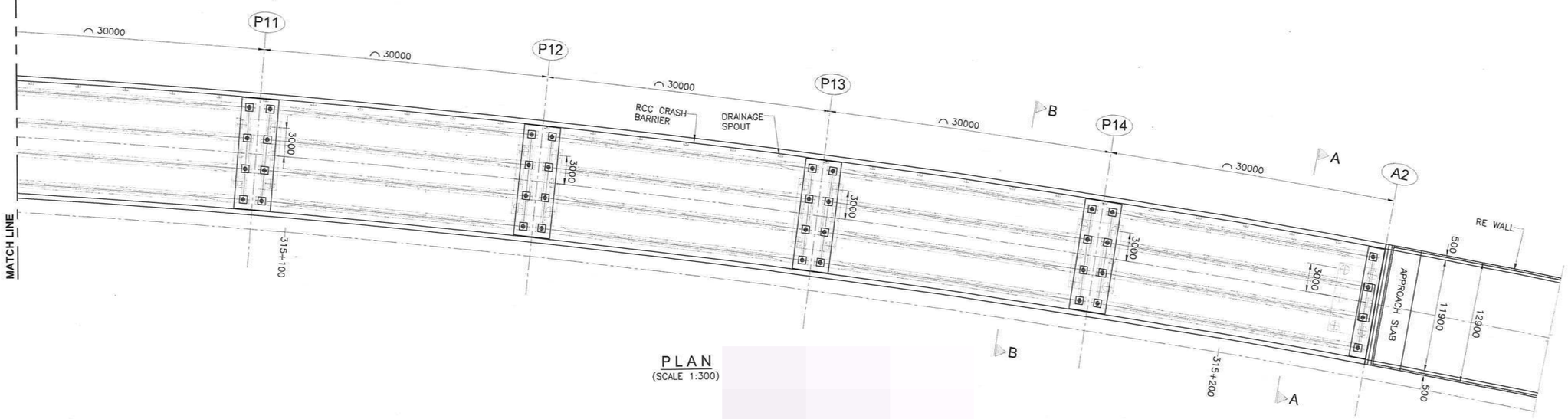

PLAN

(SCALE 1:300)

FOR APPROVAL

Rev.	Date	Description on Revisions
R1	10-08-2018	Shifting of Junction as per NHIDCL's requirement
R0	22-11-2017	FIRST SUBMISSION

Revisions

CLIENT:- NATIONAL HIGHWAYS & INFRASTRUCTURE DEVELOPMENT CORPORATION LTD

AUTHORITY'S ENGINEER: STUP Consultants P. Ltd & Ayoleeza Consultants P. Ltd.

AUTHORISED SIGNATORY | DATE

PROOF CHECK CONSULTANT: K.E. TESTING COMPANY PVT. LTD.

AUTHORISED SIGNATORY | DATE

SAEFTY CONSULTANT:- Chaitanya Projects Consultancy Pvt. Ltd

AUTHORISED SIGNATORY | DATE

PROJECT: FOUR LANING OF NH-37 FROM RANGAGARA TO KALIABOR TINIALI (CH: 297.000 KM TO CH: 315.315 KM) IN NAGAON DISTRICT IN THE STATE OF ASSAM UNDER SARDP-NE, PHASE A ON EPC MODE

EPC CONTRACTOR:- SIMPLEX INFRASTRUCTURES LIMITED, 27, SHAKESPEARE SARANI, KOLKATA-17, INDIA

CONSULTANTS:- AECOM, 9th Floor, Infinity Tower C DLF Cyber City, DLF Phase II, Gurgaon-122002, Haryana, India

DRAWN	DESIGN	CHECKED BY	APPROVED BY
MANISH VERMA	S. YADAV	S.P. SINGH	S. RASTOGI

SCALE:- AS SHOWN

TITLE:- GENERAL ARRANGEMENT DRAWING FOR FLYOVER AT CH. 314+992 (SCH. B CH. 314+747)

DRAWING NO.:- AECOM-DELD15159-DD-DWG-FO-314+992-GAD-01 (SH 4 OF 6)

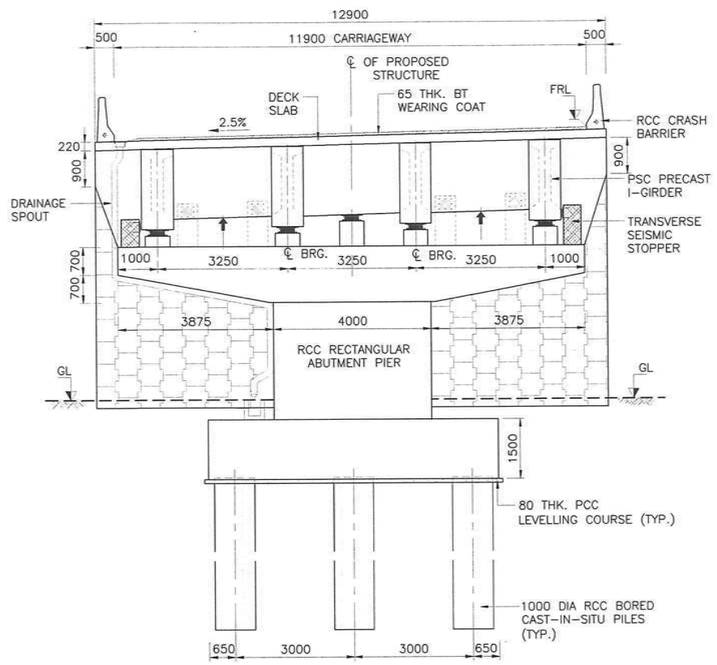

SECTION A-A
(SCALE : 1:100)

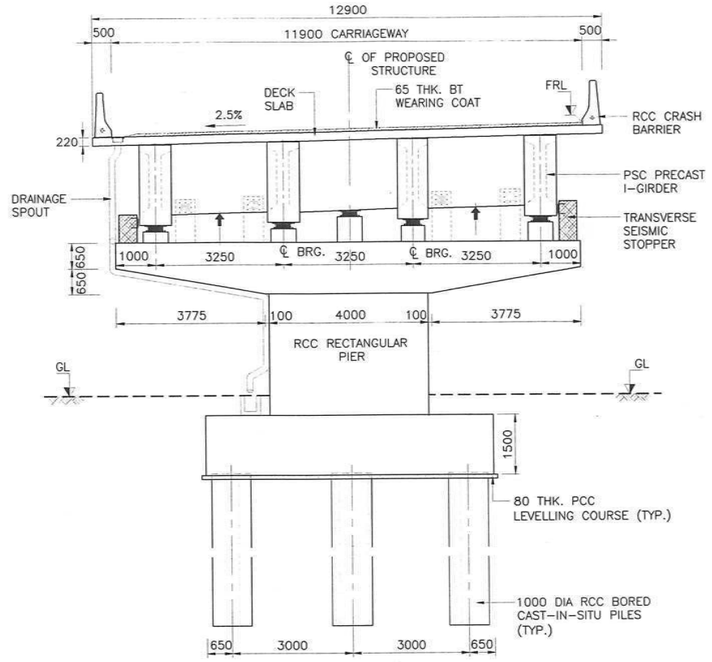

SECTION B-B
(SCALE : 1:100)

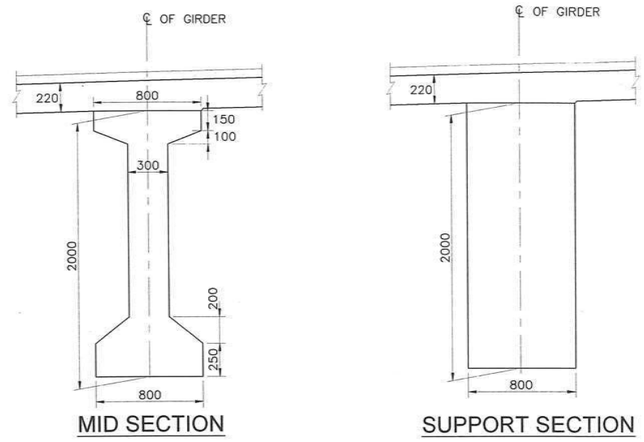

DETAIL OF PSC PRECAST I-GIRDER
(SCALE 1:30)

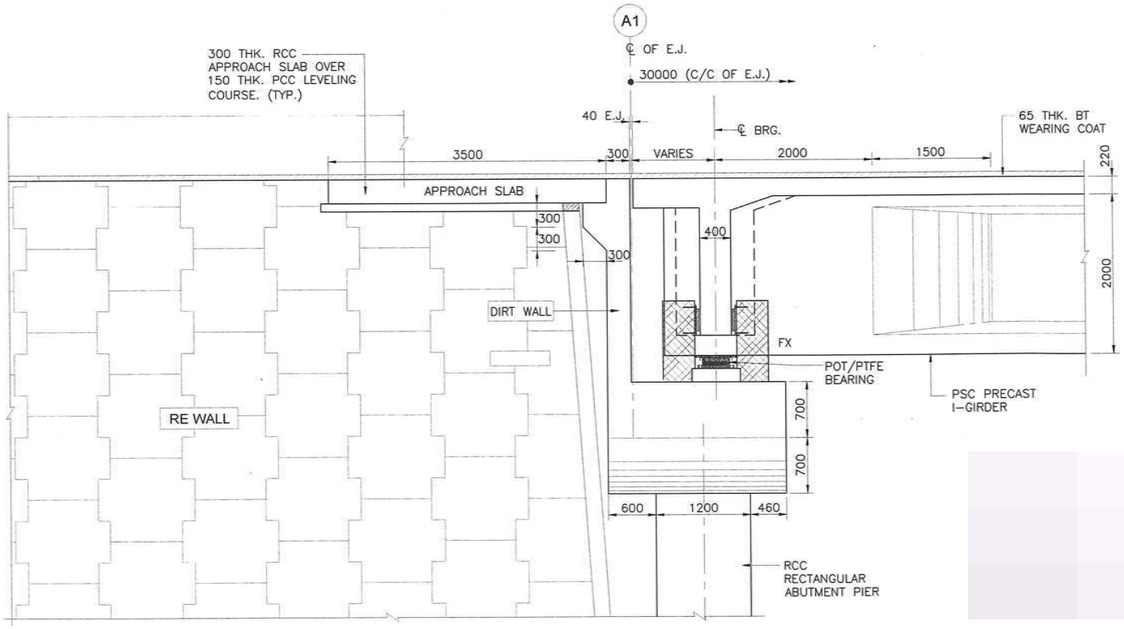

DETAIL-1
(SCALE 1:50)

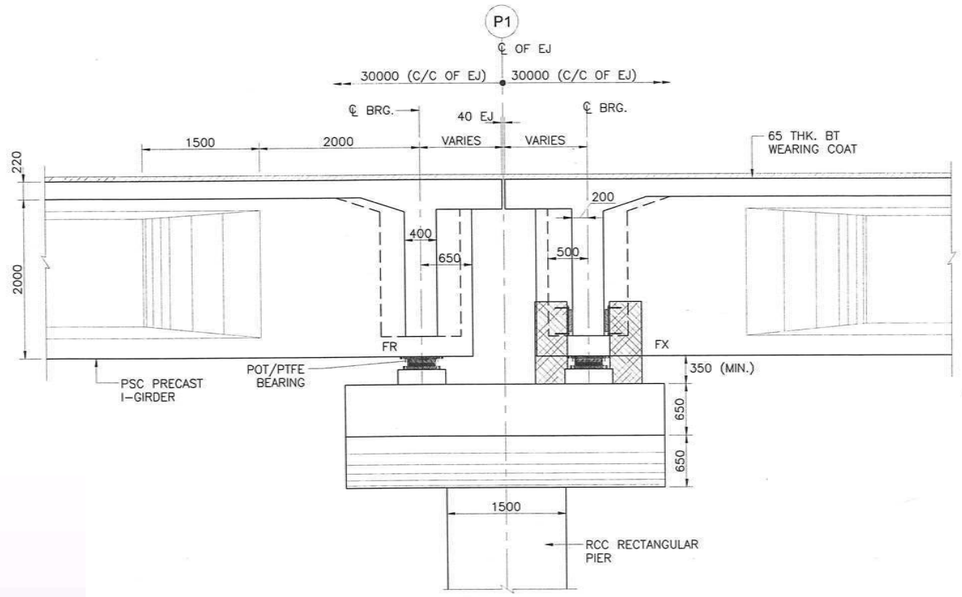

DETAIL-2
(SCALE 1:50)

FOR APPROVAL

Rev.	Date	Description on Revisions
R1	10-08-2018	Shifting of Junction as per NHIDCL's requirement
R0	22-11-2017	FIRST SUBMISSION

Revisions

CLIENT:- NATIONAL HIGHWAYS & INFRASTRUCTURE DEVELOPMENT CORPORATION LTD

AUTHORITY'S ENGINEER: STUP Consultants P. Ltd & Ayoleeza Consultants P. Ltd. — AUTHORISED SIGNATORY — DATE

PROOF CHECK CONSULTANT: — AUTHORISED SIGNATORY — DATE

SAEFTY CONSULTANT:- Chaitanya Projects Consultancy Pvt. Ltd — AUTHORISED SIGNATORY — DATE

PROJECT: FOUR LANING OF NH-37 FROM RANGAGARA TO KALIABOR TINIALI (CH: 297.000 KM TO CH: 315.315 KM) IN NAGAON DISTRICT IN THE STATE OF ASSAM UNDER SARDP-NE, PHASE A ON EPC MODE

EPC CONTRACTOR:- SIMPLEX INFRASTRUCTURES LIMITED, 27, SHAKESPEARE SARANI, KOLKATA-17, INDIA

CONSULTANTS:- AECOM, 9th Floor, Infinity Tower C DLF Cyber City, DLF Phase II, Gurgaon-122002, Haryana, India

MANISH VERMA	S. YADAV	S. P. SINGH	S. BALLOGI
DRAWN	DESIGN	CHECKED BY	APPROVED BY

SCALE:- AS SHOWN

TITLE:- GENERAL ARRANGEMENT DRAWING FOR FLYOVER AT CH. 314+992 (SCH. B CH. 314+747)

DRAWING NO.:- AECOM-DELD15159-DD-DWG-FO-314+992-GAD-01 (SH 5 OF 6)

BORE HOLE DETAILS

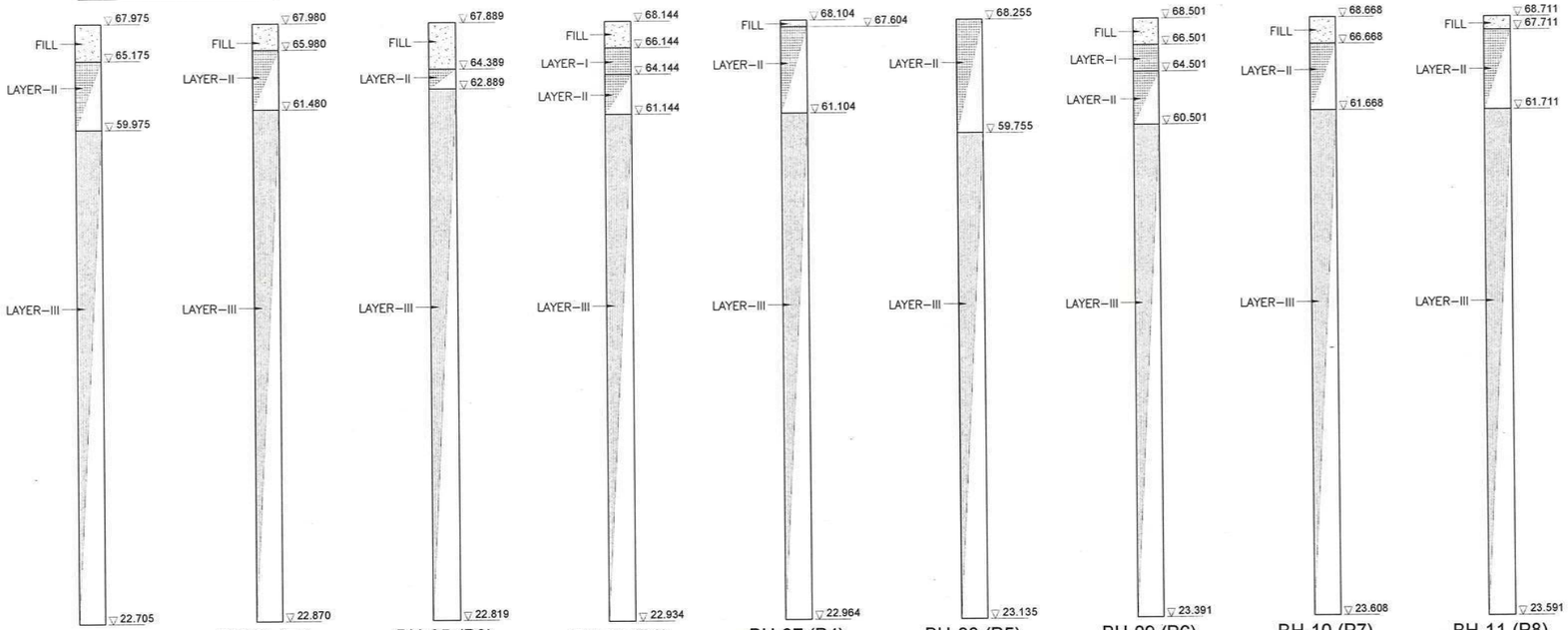

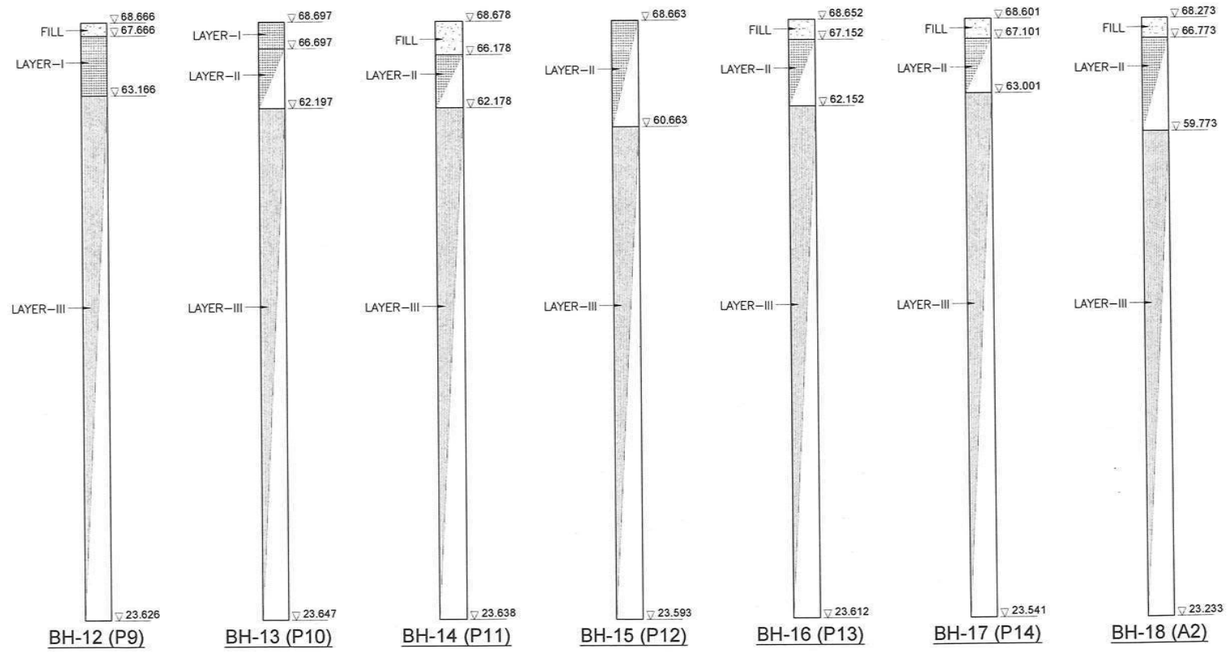

NOTES:-

1. ALL DIMENSIONS ARE IN MILLIMETERS, LEVELS ARE IN METERS UNLESS OTHERWISE MENTIONED.
2. NO DIMENSION SHALL BE MEASURED FROM THE DRAWINGS. ONLY WRITTEN DIMENSIONS SHALL BE FOLLOWED.
3. THE DRAWING SHALL BE READ IN CONJUNCTION WITH RELEVANT HIGHWAY PLAN AND PROFILE DRAWINGS. FRL, BED LEVEL, CAMBER/SUPERELEVATION AND LAYOUT SHALL ALSO BE VERIFIED AT SITE BEFORE EXECUTION. DISCEPANCIES SHALL BE BROUGHT TO THE NOTICE OF THE ENGINEER FOR REVISION IN DRAWINGS, IF ANY.
4. CHAINAGE OF THE STRUCTURE IS AT THE CENTER LINE OF THE PROPOSED STRUCTURE.
5. THE REINFORCEMENT SHALL BE HYSD BARS OF GRADE DESIGNATION Fe 500D CONFORMING TO IS 1786-2008 AND IRC 112-2011.
6. CONCRETE SHALL BE DESIGN MIX WITH A MINIMUM 28 DAYS CHARACTERISTIC CUBE STRENGTH FOR DIFFERENT ELEMENTS AS FOLLOWS:
   - a.PSC PRECAST I-GIRDER — M45
   - b.RCC DECK SLAB & CROSS GIRDER — M40
   - c.RCC ABUT. & ABUT. CAP — M35
   - d.RCC PILE & PILE CAP — M35
   - e.RCC CRASH BARRIER — M40
   - f.RCC APPROACH SLAB — M30
   - g.PCC LEVELING COURSE — M15
   - h.RCC PEDESTALS — M40
   - i. RCC SEISMIC STOPPER — M35
7. CLEAR COVER TO OUTER STEEL SHALL BE AS FOLLOWS:-
   - a.PSC PRECAST I-GIRDER — 40MM
   - b.RCC DECK SLAB — 40MM
   - c.RCC ABUT. / PIER — 40MM
   - d.RCC ABUT. / PIER CAP — 40MM
   - e.RCC SEISMIC STOPPERS — 40MM
   - f.RCC PILE & PILE CAP — 75MM
   - g.RCC CRASH BARRIER — 40MM
8. 65 THK. BITUMINOUS WEARING COAT SHALL BE ADOPTED IN CONFORMITY WITH SECTION 2702 OF MORTH SPECIFICATIONS.
9. DRAINAGE SPOUT 100MM DIA SPACED 5000MM C/C SHALL BE PROVIDED IN SUPERSTRUCTURE.
10. CONDITION OF EXPOSURE IS MODERATE.
11. THIS STRUCTURE LIES IN SEISMIC ZONE V.
12. THE STRUCTURE HAS BE DESIGNED FOR LIVE LOAD COMBINATIONS CONFORMING TO IRC: 6-2014.
13. SINGLE STRIP SEAL TYPE EXPANSION JOINT SHALL BE PROVIDED AS PER MODIFIED INTERIM SPECIFICATION FOR EXPANSION JOINTS ISSUED VIDE "MORTH" CIRCULAR NO. RW/NH-34059/1/98-S&R DATED 30-11-2000 & 25-01-2001.
14. TAR PAPER BEARING SHALL BE PROVIDED BETWEEN APPROACH SLAB & BRACKET.
15. THE MAXIMUM PILE LOAD (TONNES) AS PER DESIGN IS:

ABUTMENT		PIER		
NORMAL		NORMAL		
A1	A2	P1-P4	P5-P10	P11-P14
210.80		255.44	253.22	244.23
SEISMIC		SEISMIC		
282.75		353.24	352.69	336.28

WHICH IS LESS THAN PILE LOAD CAPACITY AT FOUNDING LEVEL AS PER GEOTECH REPORT.

REFERENCE DRAWINGS:

1.) SUPERSTRUCTURE:-
AECOM-DELD15159-DD-DWG-FO-314+992-SUP-01 (SH1 TO 16)

2.) SUBSTRUCTURE:-
AECOM-DELD15159-DD-DWG-FO-314+992-SUB-01 (SH1 TO 5)
AECOM-DELD15159-DD-DWG-FO-314+992-SUB-02 (SH1 TO 5)
AECOM-DELD15159-DD-DWG-FO-314+992-SUB-03 (SH1 TO 5)
AECOM-DELD15159-DD-DWG-FO-314+992-SUB-04 (SH1 TO 5)

3.) MISCELLANEOUS DWGS.
AECOM-DELD15159--MISC-01

LEGEND FOR BORE HOLE

SYMBOL	DESCRIPTION
	FILL - (yellowish gray silty sand/silty clay with pebble, gravels & kankar)
	LAYER-I - yellowish grey soft to medium stiff clayey silt/silty clay
	LAYER-II - yellowish grey loose to medium dense clayey sandy silt/silty sand
	LAYER-III - yellowish grey/brownish yellow medium dense to very dense silty sand with kankars in higher depths

LEGEND:-

FRL	–	FINISHED ROAD LEVEL
LHS	–	LEFT HAND SIDE
RHS	–	RIGHT HAND SIDE
GL	–	GROUND LEVEL
FDN	–	FOUNDATION
LVL	–	LEVEL
EJ	–	EXPANSION JOINT
CRL	–	CROSS ROAD LEVEL
FX	–	FIXED BEARING
FR	–	FREE BEARING

FOR APPROVAL

Rev.	Date	Description on Revisions
R1	10-08-2018	Shifting of Junction as per NHIDCL's requirement
R0	22-11-2017	FIRST SUBMISSION

Revisions

CLIENT:- NATIONAL HIGHWAYS & INFRASTRUCTURE DEVELOPMENT CORPORATION LTD

AUTHORITY'S ENGINEER: STUP Consultants P. Ltd & Ayoleeza Consultants P. Ltd.
AUTHORISED SIGNATORY | DATE

PROOF CHECK CONSULTANT: CETTIGT
AUTHORISED SIGNATORY | DATE

SAEFTY CONSULTANT:- Chaitanya Projects Consultancy Pvt. Ltd
AUTHORISED SIGNATORY | DATE

PROJECT: FOUR LANING OF NH-37 FROM RANGAGARA TO KALIABOR TINIALI (CH: 297.000 KM TO CH: 315.315 KM) IN NAGAON DISTRICT IN THE STATE OF ASSAM UNDER SARDP-NE, PHASE A ON EPC MODE

EPC CONTRACTOR:- SIMPLEX INFRASTRUCTURES LIMITED, 27, SHAKESPEARE SARANI, KOLKATA-17, INDIA

CONSULTANTS:- AECOM, 9th Floor, Infinity Tower C DLF Cyber City, DLF Phase II, Gurgaon-122002, Haryana, India
DRAWN: MANISH VERMA | DESIGN: S. YADAV | CHECKED BY: S.P. SINGH | APPROVED BY: S. RASTOGI

SCALE:- AS SHOWN

TITLE:- GENERAL ARRANGEMENT DRAWING FOR FLYOVER AT CH. 314+992 (SCH. B CH. 314+747)

DRAWING NO.:- AECOM-DELD15159-DD-DWG-FO-314+992-GAD-01 (SH 6 OF 6)

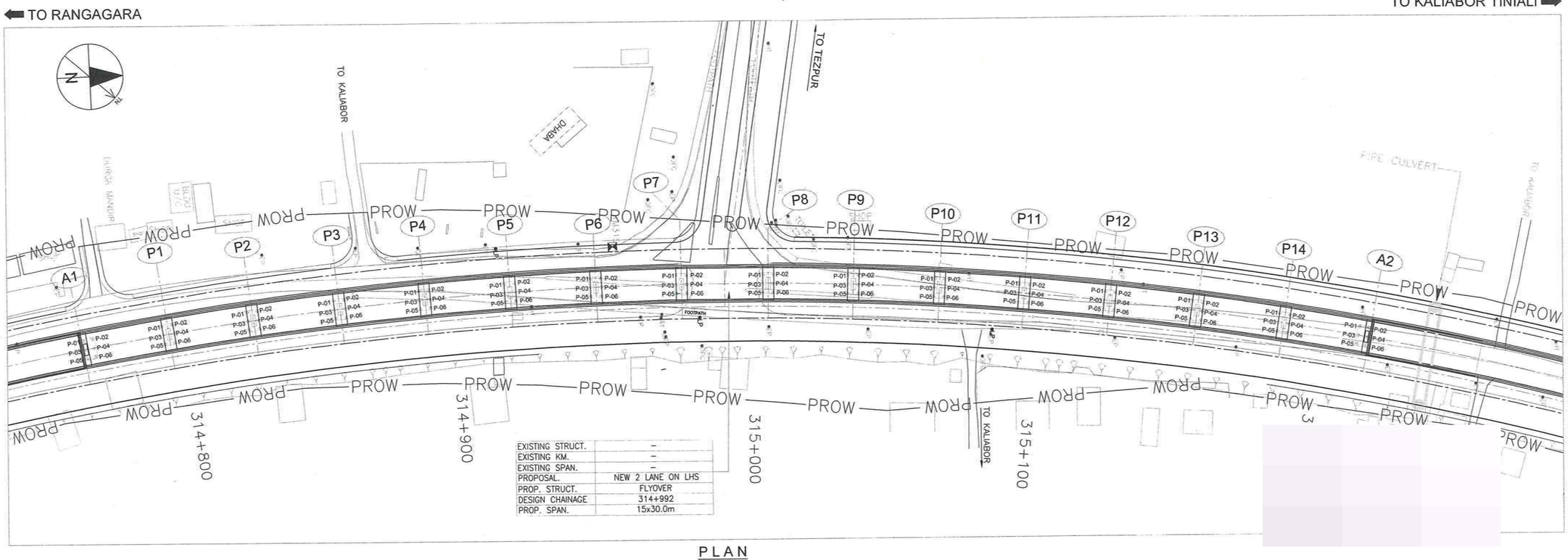

EXISTING STRUCT.	-
EXISTING KM.	-
EXISTING SPAN.	-
PROPOSAL.	NEW 2 LANE ON LHS
PROP. STRUCT.	FLYOVER
DESIGN CHAINAGE	314+992
PROP. SPAN.	15x30.0m

PLAN

PILE COORDINATES	
NOS.	ABUTMENT A1
01	X = 492844.565 Y = 2935064.991
02	X = 492844.109 Y = 2935067.956
03	X = 492847.530 Y = 2935065.448
04	X = 492847.074 Y = 2935068.413
05	X = 492850.495 Y = 2935065.904
06	X = 492850.039 Y = 2935068.869

PILE COORDINATES	
NOS.	PIER P1
01	X = 492840.800 Y = 2935092.206
02	X = 492840.354 Y = 2935095.678
03	X = 492843.775 Y = 2935092.588
04	X = 492843.330 Y = 2935096.060
05	X = 492846.751 Y = 2935092.970
06	X = 492846.305 Y = 2935096.442

PILE COORDINATES	
NOS.	PIER P2
01	X = 492837.380 Y = 2935122.085
02	X = 492837.021 Y = 2935125.567
03	X = 492840.364 Y = 2935122.393
04	X = 492840.006 Y = 2935125.875
05	X = 492843.349 Y = 2935122.700
06	X = 492842.990 Y = 2935126.182

PILE COORDINATES	
NOS.	PIER P3
01	X = 492834.704 Y = 2935152.040
02	X = 492834.432 Y = 2935155.530
03	X = 492837.695 Y = 2935152.273
04	X = 492837.423 Y = 2935155.762
05	X = 492840.685 Y = 2935152.506
06	X = 492840.414 Y = 2935155.995

PILE COORDINATES	
NOS.	PIER P4
01	X = 492832.772 Y = 2935182.052
02	X = 492832.587 Y = 2935185.547
03	X = 492835.767 Y = 2935182.210
04	X = 492835.583 Y = 2935185.705
05	X = 492838.763 Y = 2935182.368
06	X = 492838.579 Y = 2935185.863

PILE COORDINATES	
NOS.	PIER P5
01	X = 492831.586 Y = 2935212.103
02	X = 492831.489 Y = 2935215.601
03	X = 492834.584 Y = 2935212.186
04	X = 492834.487 Y = 2935215.685
05	X = 492837.583 Y = 2935212.269
06	X = 492837.486 Y = 2935215.768

PILE COORDINATES	
NOS.	PIER P6
01	X = 492831.146 Y = 2935242.174
02	X = 492831.137 Y = 2935245.674
03	X = 492834.146 Y = 2935242.182
04	X = 492834.137 Y = 2935245.682
05	X = 492837.146 Y = 2935242.190
06	X = 492837.137 Y = 2935245.690

PILE COORDINATES	
NOS.	PIER P7
01	X = 492831.453 Y = 2935272.246
02	X = 492831.531 Y = 2935275.745
03	X = 492834.453 Y = 2935272.179
04	X = 492834.531 Y = 2935275.678
05	X = 492837.452 Y = 2935272.112
06	X = 492837.530 Y = 2935275.611

PILE COORDINATES	
NOS.	PIER P8
01	X = 492832.507 Y = 2935302.302
02	X = 492832.673 Y = 2935305.798
03	X = 492835.504 Y = 2935302.160
04	X = 492835.670 Y = 2935305.656
05	X = 492838.501 Y = 2935302.018
06	X = 492838.666 Y = 2935305.514

PILE COORDINATES	
NOS.	PIER P9
01	X = 492834.307 Y = 2935332.322
02	X = 492834.560 Y = 2935335.813
03	X = 492837.300 Y = 2935332.105
04	X = 492837.553 Y = 2935335.596
05	X = 492840.292 Y = 2935331.889
06	X = 492840.545 Y = 2935335.379

PILE COORDINATES	
NOS.	PIER P10
01	X = 492836.852 Y = 2935362.288
02	X = 492837.193 Y = 2935365.772
03	X = 492839.838 Y = 2935361.997
04	X = 492840.178 Y = 2935365.480
05	X = 492842.824 Y = 2935361.705
06	X = 492843.164 Y = 2935365.189

PILE COORDINATES	
NOS.	PIER P11
01	X = 492840.141 Y = 2935392.182
02	X = 492840.568 Y = 2935395.656
03	X = 492843.118 Y = 2935391.816
04	X = 492843.545 Y = 2935395.290
05	X = 492846.096 Y = 2935391.450
06	X = 492846.523 Y = 2935394.924

PILE COORDINATES	
NOS.	PIER P12
01	X = 492844.170 Y = 2935421.985
02	X = 492844.684 Y = 2935425.447
03	X = 492847.138 Y = 2935421.545
04	X = 492847.652 Y = 2935425.007
05	X = 492850.105 Y = 2935421.104
06	X = 492850.619 Y = 2935424.566

PILE COORDINATES	
NOS.	PIER P13
01	X = 492848.939 Y = 2935451.679
02	X = 492849.539 Y = 2935455.127
03	X = 492851.894 Y = 2935451.164
04	X = 492852.495 Y = 2935454.612
05	X = 492854.850 Y = 2935450.650
06	X = 492855.450 Y = 2935454.098

PILE COORDINATES	
NOS.	PIER P14
01	X = 492854.443 Y = 2935481.245
02	X = 492855.129 Y = 2935484.677
03	X = 492857.385 Y = 2935480.656
04	X = 492858.071 Y = 2935484.089
05	X = 492860.327 Y = 2935480.068
06	X = 492861.013 Y = 2935483.500

PILE COORDINATES	
NOS.	ABUTMENT A2
01	X = 492860.217 Y = 2935508.617
02	X = 492860.879 Y = 2935511.543
03	X = 492863.143 Y = 2935507.955
04	X = 492863.805 Y = 2935510.881
05	X = 492866.069 Y = 2935507.294
06	X = 492866.731 Y = 2935510.220

FOR APPROVAL

Rev.	Date	Description on Revisions
R0	09-08-2018	REVISED SUBMISSION

Revisions

CLIENT:- NATIONAL HIGHWAYS & INFRASTRUCTURE DEVELOPMENT CORPORATION LTD

AUTHORITY'S ENGINEER: STUP Consultants P. Ltd & Ayoleeza Consultants P. Ltd.

PROOF CHECK CONSULTANT:- CTEST

SAEFTY CONSULTANT:- Chaitanya Projects Consultancy Pvt. Ltd

PROJECT: FOUR LANING OF NH-37 FROM RANGAGARA TO KALIABOR TINIALI (CH: 297.000 KM TO CH: 315.315 KM) IN NAGAON DISTRICT IN THE STATE OF ASSAM STATE OF ASSAM UNDER SARDP-NE, PHASE A ON EPC MODE

EPC CONTRACTOR:- SIMPLEX INFRASTRUCTURES LIMITED, 27, SHAKESPEARE SARANI, KOLKATA-17, INDIA

CONSULTANTS:- AECOM, 9th Floor, Infinity Tower C DLF Cyber City DLF Phase II, Gurgaon-122002, Haryana, India

DRAWN	DESIGN	CHECKED BY	APPROVED BY
MANISH VERMA	S. YADAV	E.P. SINGH	S.K. SINGH

SCALE:- AS SHOWN

TITLE:- COORDINATES FOR FLYOVER AT CH. 314+992 (SCH. B CH. 314+747)

DRAWING NO.:- AECOM-DELD15159-DD-DWG-FO-314+992-CRD-01

REV. R0

AUTHORISED SIGNATORY | DATE | AUTHORISED SIGNATORY | DATE | AUTHORISED SIGNATORY | DATE

SIL-665 dt: 26-12-20 BC & HPC
Vide letter no. stup/1190 dt: 10-2-21

NATIONAL HIGHWAYS & INFRASTRUCTURE DEVELOPMENT CORPORATION LTD.

Team Leader
TTUP Consultants Pvt. Ltd
Nagaon-782001 (Assam)

Four Laning of NH – 37 from Rangagara to Kaliabor Tiniali (Ch: 297.000 Km to Ch: 315.315 Km of NH-37) in Nagaon District in the State of Assam under SARDP – NE, Phase A, on EPC Basis

simplex Culverts
1/1 (copy-1)
Final

STRUCTURE DRAWINGS
CULVERTS

CONTRACTOR:-

SIMPLEX INFRASTRUCTURES LIMITED

CONSULTANTS:-

AECOM
AECOM India Private Limited

December 2020

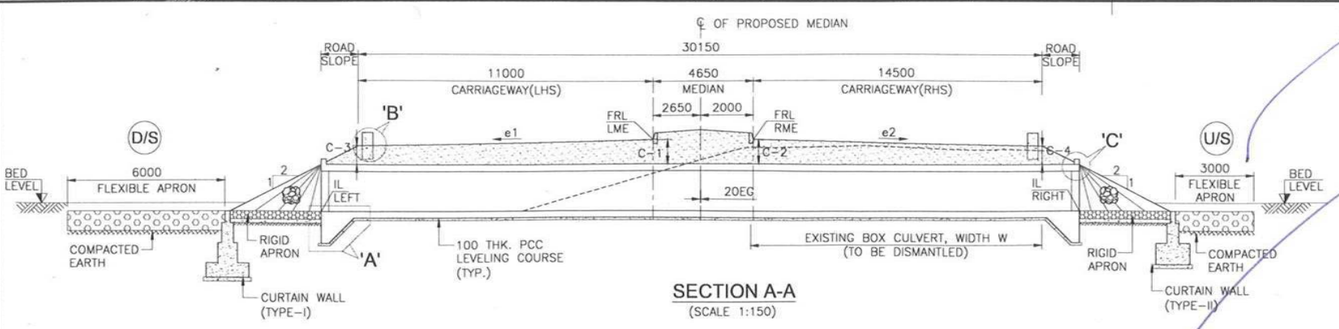

SECTION A-A
(SCALE 1:150)

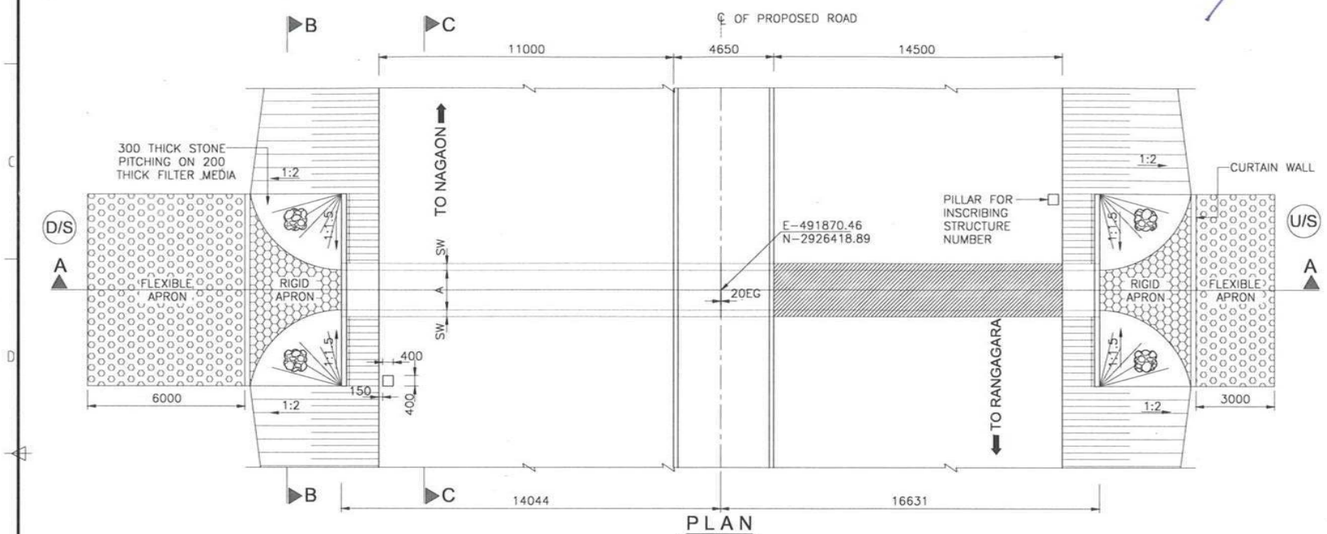

PLAN
(SCALE 1:150)

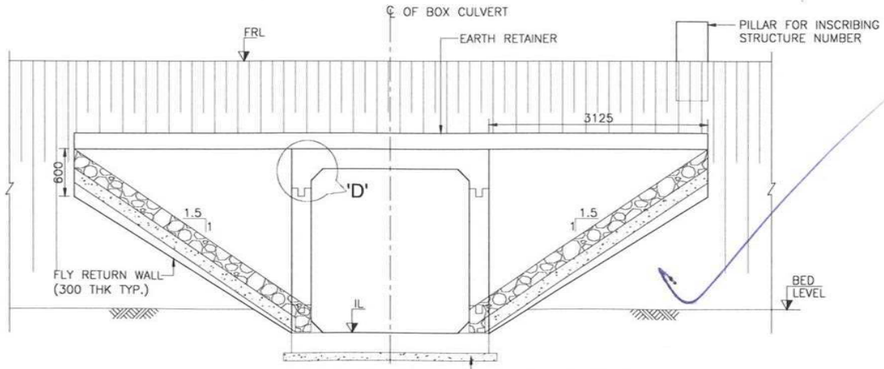

SECTION B-B
(SCALE 1:50)

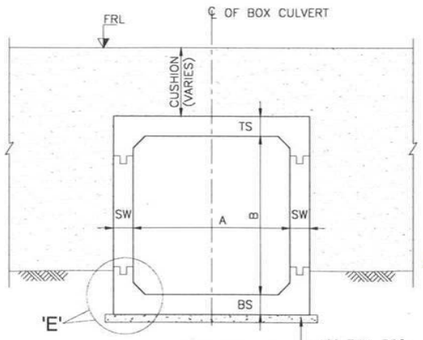

SECTION C-C
(SCALE 1:50)

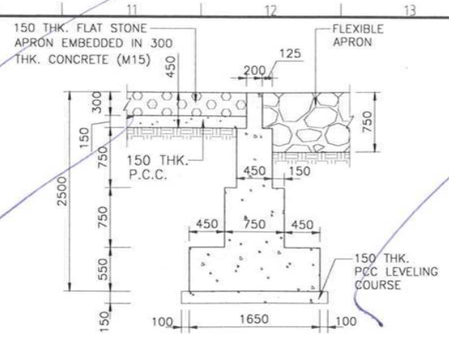

DETAILS OF PCC CURTAIN WALL TYPE-I
(SCALE 1:50)

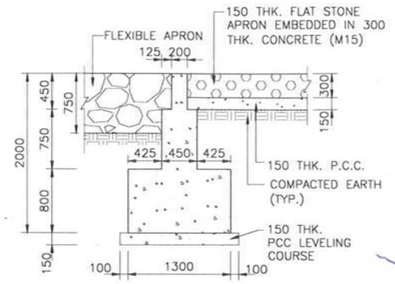

DETAILS OF PCC CURTAIN WALL TYPE-II
(SCALE 1:50)

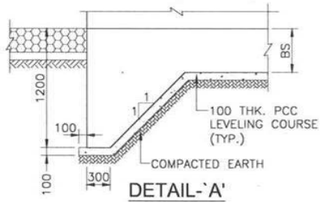

DETAIL-`A'
(SCALE 1:50)

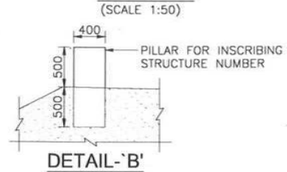

DETAIL-`B'
(SCALE 1:50)

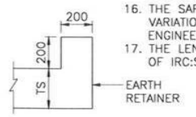

DETAIL-`C'
(SCALE 1:25)

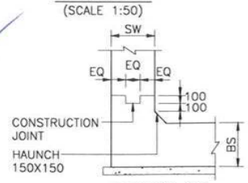

DETAIL-`E'
(SCALE 1:50)

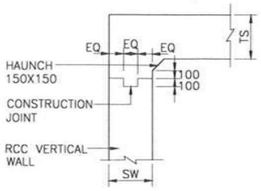

DETAIL-`D'
(SCALE 1:50)

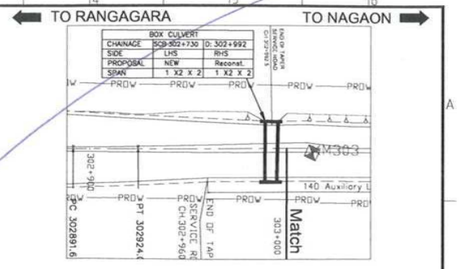

KEY PLAN

NOTES:-

1. ALL DIMENSIONS ARE IN MILLIMETERS, LEVELS ARE IN METERS UNLESS OTHERWISE MENTIONED.
2. NO DIMENSION SHALL BE MEASURED FROM THE DRAWINGS. ONLY WRITTEN DIMENSIONS SHALL BE FOLLOWED.
3. THE DRAWING SHALL BE READ IN CONJUNCTION WITH RELEVANT HIGHWAY PLAN AND PROFILE DRAWINGS. FRL, BED LEVEL, CAMBER/SUPERELEVATION AND LAYOUT SHALL ALSO BE VERIFIED AT SITE BEFORE EXECUTION. DISCEPANCIES SHALL BE BROUGHT TO THE NOTICE OF THE ENGINEER FOR REVISION IN DRAWINGS, IF ANY.
4. CHAINAGE OF THE STRUCTURE IS AT THE CENTER LINE OF THE PROPOSED STRUCTURE.
5. THE REINFORCEMENT SHALL BE HYSD BARS OF GRADE DESIGNATION Fe 500D CONFORMING TO IS 1786-2008 & IRC 112-2011.
6. CONCRETE SHALL BE DESIGN MIX WITH A MINIMUM 28 DAYS CHARACTERISTIC CUBE STRENGTH FOR DIFFERENT ELEMENTS AS FOLLOWS:
   - a.RCC BOX STRUCTURE – M30
   - b.PCC LEVELING COURSE – M15
   - c.RCC FLY RETURN WALL – M30
   - d.PCC CURTAIN WALL – M20
7. CLEAR COVER TO OUTER STEEL SHALL BE AS FOLLOWS:-
   - a.SUPERSTRUCTURE 40MM
   - b.VERTICAL FACE IN CONTACT WITH EARTH 75MM
   - c.VERTICAL FACE NOT IN CONTACT WITH EARTH 40MM
   - d.FOUNDATION 75MM
8. BACK FILLING BEHIND WALLS/ABUTMENT SHALL CONSISTS OF SELECTED EARTH CONFORMING TO APPENDIX 6 OF IRC:78-2014 HAVING PROPERTIES C=0, ϕ>=30°, γ=2.0t/cu.m.
9. FORMATION LEVEL SHOWN IS AT MEDIAN EDGE.
10. THE STRUCTURE HAS BEEN DESIGNED FOR LIVE LOAD COMBINATIONS CONFORMING TO IRC: 6-2014.
11. THE TOP OF BOTTOM RAFT SHALL BE KEPT MIN. 300MM BELOW LOWEST BED LEVEL. HOWEVER, CHANGE IN CLEAR HEIGHT OF RCC BOX SHALL NOT BE MORE THAN 500MM.
12. ALL SOLID WALLS RETAINING THE EARTH SHALL BE PROVIDED WITH WEEP HOLES (100MM DIA AND SLOPE 1V:20H) STARTING 150MM ABOVE THE GROUND LEVEL AND SPACED 1000MM C/C BOTH HORIZONTALLY AND VERTICALLY IN STAGGERED MANNER.
13. 600MM THICK FILTER MEDIA SHALL BE PROVIDED BEHIND SOLID ABUTMENT WALL & RETURN WALL.
14. CONDITION OF EXPOSURE IS MODERATE.
15. 20MM EXPANSION GAP FILLED WITH COMPRESSIBLE FIBER BOARD SHALL BE PROVIDED BETWEEN ADJACENT RCC BOXES.
16. THE SAFE BEARING CAPACITY AS PER DESIGN IS 6.39t/m². ANY VARIATION ON SITE SHOULD BE INFORMED TO THE DESIGN ENGINEER FOR NECESSARY ACTION.
17. THE LENGTH OF RIGID APRON SHALL BE AS PER ARTICLE 20 OF IRC:SP:13-2004.

LEGEND:-

FRL	–	FINISHED ROAD LEVEL
BL.	–	BED LEVEL
GL.	–	GROUND LEVEL
IL	–	INVERT LEVEL
EG	–	EXPANSION GAP
LOE	–	LEFT OUTER EDGE
ROE	–	RIGHT OUTER EDGE
LME	–	LEFT MEDIAN EDGE
RME	–	RIGHT MEDIAN EDGE
THK	–	THICKNESS
U/S	–	UPSTREAM
D/S	–	DOWNSTREAM

REFERENCE DRAWINGS.:-

1. REINFORCEMENT DETAILS FOR CULVERTS. AECOM-DELD15159-DD-DWG-BC-REINF.-01
2. MISCELLANEOUS DWGS. AECOM-DELD15159-MISC-01

SCHEDULE OF BOX CULVERT

S.No.	EXISTING KM.	DESIGN CH.	EXISTING SPAN NOS. x SPAN x HT.	EXISTING CULVERT	EXISTING WIDTH,W (m)	SKEW	PROPOSAL	PROPOSED STRUCTURE	PROPOSED SPAN (NOS.xSPAN xHT.)	FRL		CAMBER/ SUPERELEVATION		BED LEVEL		INVERT LEVEL		TCS	FLOW OF DIRECTION	CUSHION (m)				RCC BOX DIMENSIONS (m)					BARREL LENGTH OF BOX (m)	REINFORCEMENT CATEGORY (REFER REINF. DRAWING)
										LME	RME	LEFT (e1)	RIGHT (e2)	LEFT	RIGHT	LEFT	RIGHT			LOE (C-3)	LME (C-1)	RME (C-2)	ROE (C-4)	A	B	TS	BS	SW		
1	302+730	302+992	1 x 2.0 x 2.0	BOX CULVERT	11.7	0	RECONSTRUCTION	BOX CULVERT	1 x 2.0 x2.0	67.831	67.831	-2.50	-2.50	65.719	65.789	65.109	65.153	TYPE-4	R-L	0.197	0.459	0.441	0.065	2.00	2.00	0.250	0.300	0.250	30.675	2A

Rev.	Date	Description on Revisions
R2	May 2018	Fly Wing Wall Length Revised
R1	Nov.2017	P&P REVISED
R0	OCT. 2017	FIRST SUBMISSION

Revisions

CLIENT:- NATIONAL HIGHWAYS & INFRASTRUCTURE (Development Coporation Ltd)

AUTHORITY'S ENGINEER: STUP Consultants P. Ltd & Ayoleeza Consultants P. Ltd — AUTHORISED SIGNATORY — DATE

PROOF CHECKED CONSULTANT:- CE TESTING Company Pvt. Ltd — AUTHORISED SIGNATORY — DATE

SAEFTY CONSULTANT:- Chaitanya Projects Consultancy Pvt. Ltd — AUTHORISED SIGNATORY — DATE

PROJECT: FOUR LANING OF NH-37 FROM RANGAGARA TO KALIABOR TINIALI (CH: 297.000 KM TO CH: 315.315 KM) IN NAGAON DISTRICT IN THE STATE OF ASSAM UNDER SARDP-NE, PHASE A ON EPC MODE

EPC CONTRACTOR:- SIMPLEX INFRASTRUCTURES LIMITED, 27, SHAKESPEARE SARANI, KOLKATA-17, INDIA

CONSULTANTS:- AECOM, 9th Floor, Infinity Tower C,DLF Cyber City, DLF Phase II, Gurgaon-122002, Haryana, India

DRAWN	DESIGN	CHECKED BY	APPROVED BY
R. BENIWAL	S. YADAV	S.P. SINGH	S. RASTOGI

SCALE:- 1 : 1000

TITLE:- GENERAL ARRANGEMENT DRAWING FOR RCC BOX CULVERT AT CH. 302+992 (SCH. CH. 302+730)

DRAWING NO.:- AECOM-DELD15159-DD-DWG-BC-302+992-GAD-01 — REV. R1

Bridge Engineer, Stup Consultants Pvt. Ltd, Nagaon-782001 (Assam)

Resident Engineer, STUP Consultant Pvt. Ltd., Nagaon-782001 (Assam)

Team Leader, STUP Consultants Pvt. Ltd, Nagaon-782001 (Assam)