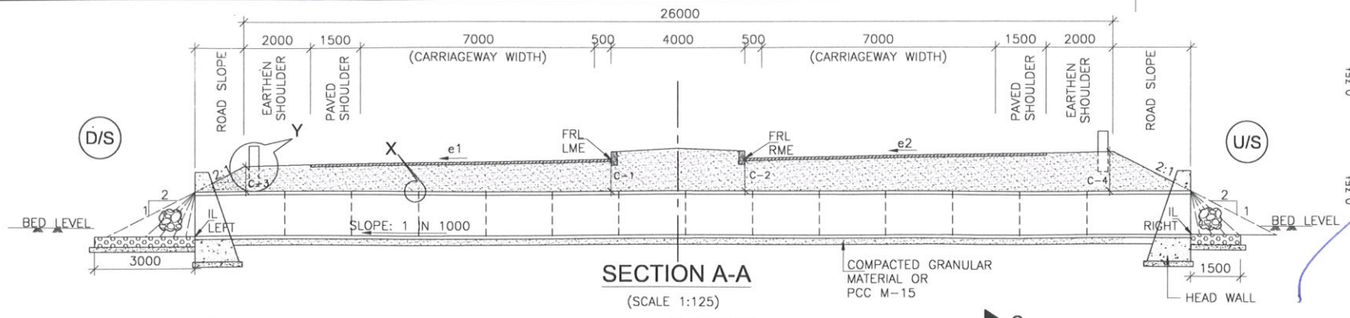

SECTION A-A

(SCALE 1:125)

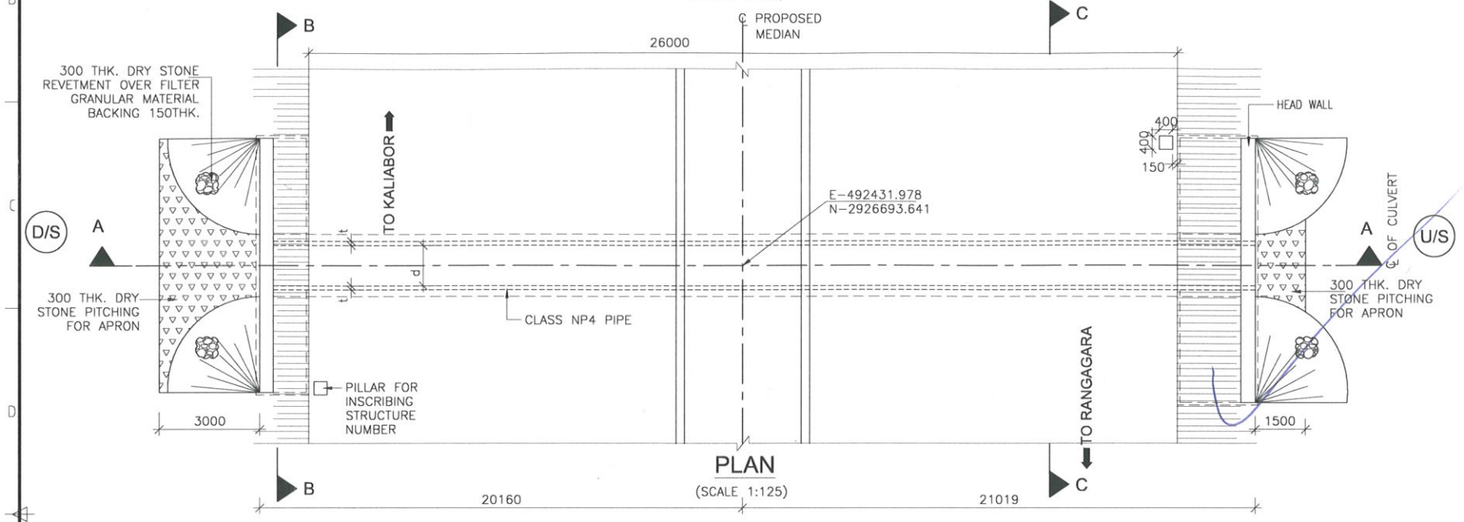

PLAN

(SCALE 1:125)

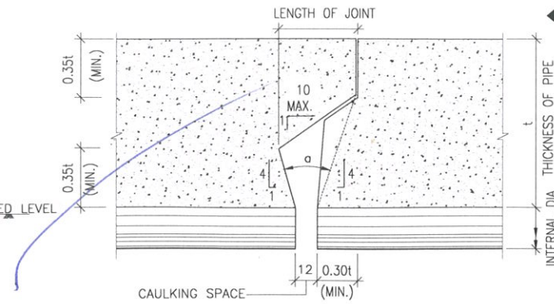

DETAIL X
INTERNAL FLUSH JOINT

a – INCLUDED ANGLE NOT MORE THAN 25°
(ONLY FOR DESIGN PURPOSE NOT TO BE MEASURED)

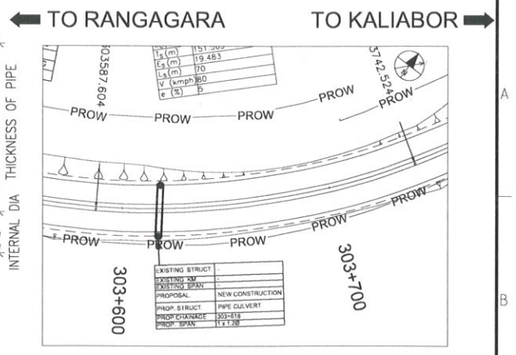

KEY PLAN

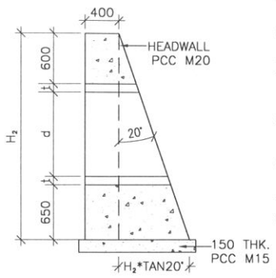

DETAIL OF HEAD WALL

SCALE 1:50

NOTES:

1. ALL DIMENSIONS ARE IN MILLIMETERS AND LEVELS ARE IN METERS UNLESS OTHERWISE MENTIONED.
2. NO DIMENSION SHALL BE MEASURED FROM THE DRAWINGS. ONLY WRITTEN SHALL BE FOLLOWED.
3. ALL PIPES SHALL BE OF NP4 CLASS AS PER IS:458–2003 AND ITS AMENDMENTS.
4. CHAINAGE AND LEVELS SHALL BE VERIFIED WITH THE RELEVANT PLAN & PROFILE DRAWINGS & SITE. VARIATIONS (IF ANY) SHALL BE REPORTED TO ENGINEER FOR MODIFICATION.
5. ANY LOOSE/UNSUITABLE SOIL FOUND BELOW THE PIPE/HEAD WALL, SHALL BE REPLACED WITH SAND OR COMPACTED GRANULAR MATERIAL AS DIRECTED BY ENGINEER–IN–CHARGE.
6. FIRST CLASS BEDDING MAY BE USED FOR MAXIMUM HEIGHT OF FILL UPTO 4M. BEYOND 4M HEIGHT OF FILL PCC BEDDING SHALL BE USED AND THE PIPE SHALL BE LAID ON THE CONCRETE BEDDING BEFORE THE CONCRETE HAS SET.
7. LONGITUDINAL SLOPE OF PROPOSED PIPE SHALL NOT BE LESS THAN 1V:1000H.
8. PIPES SHALL BE JOINTED BY INTERNAL FLUSH JOINT AS PER IS 458 & AS PER THE DETAILS GIVEN IN SECTION 2906 OF MORTH SPECIFICATIONS OF ROAD AND BRIDGE WORKS. JOINTING SPACE SHALL BE FILLED WITH CEMENT MORTAR OF PROPORTION 1:2 OF CEMENT & SAND.
9. MAXIMUM LENGTH OF EACH PIPE SEGMENT HAS BEEN CONSIDERED AS 2.5M AND MINIMUM LENGTH HAS BEEN CONSIDERED AS 1.25M.
10. MINIMUM DEPTH OF EARTH CUSHION (EXCLUDING ROAD CRUST) OVER PIPE SHALL NOT BE LESS THEN 600MM FOR NEW/RECONSTRUCTION CULVERTS. IN CASE THE CUSHION IS INSUFFICIENT, ENCASING OF PIPE IN CONCRETE SHALL BE ENSURED AS PER DETAILS SHOWN IN DRAWING.
11. ROAD CRUST THICKNESS HAS BEEN CONSIDERED AS 50(BC)+90(DBM)+250(WMM)+200(GSB)=590MM.
12. SURFACE REINFORCEMENT 8ø @ 200c/c IN BOTH DIRECTION SHALL BE PROVIDED IN PCC STRUCTURE – HEAD WALL &. CONCRETE ENCASING (IF APPLICABLE).
13. PROTECTION WORK ON EMBANKMENT SIDE SHALL BE AS PER HIGHWAY DRAWINGS.
14. ROAD FURNITURE SHALL BE PROVIDED AS PER HIGHWAY DRAWING.
15. THE HEAD WALL SHALL BE CONSTRUCTED WITHOUT ANY VERTICAL CONSTRUCTION JOINT ALONG ITS LENGTH.
16. FOR SHOULDER CROSS–FALL, REFER HIGHWAY DRAWING.
17. THE FLOOR PROTECTION, PITCHING AND OTHER CULVERT DETAILS ARE AS PER IRC SP 13–2004.

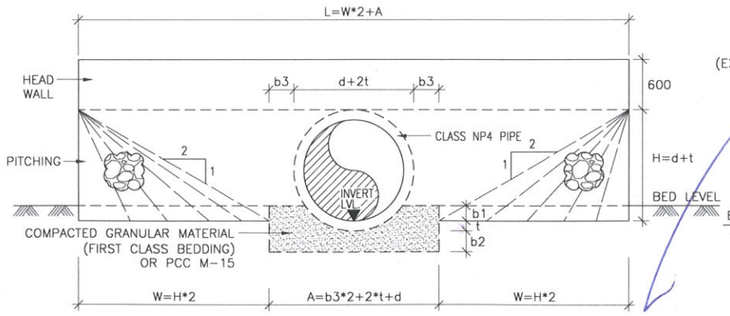

SECTION B-B

(SCALE 1:50)

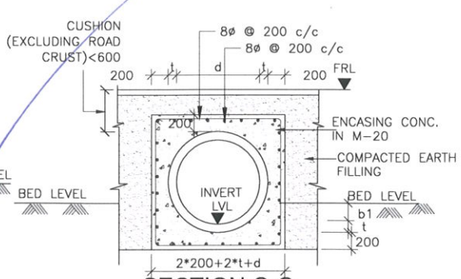

SECTION C-C
WITH ENCASING DETAIL OF PIPE

(SCALE 1:50)
[APPLICABLE IF CUSHION (EXCLUDING ROAD CRUST) <600mm]

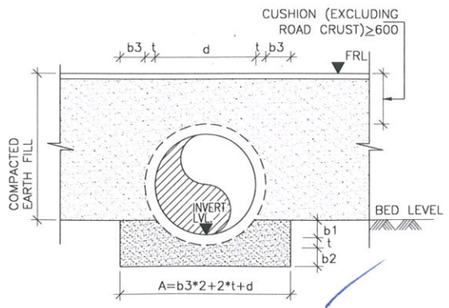

SECTION C-C

(SCALE 1:50)

Bridge Engineer
Stup Consultants Pvt. Ltd.
Nagaon-782001(Assam)

Resident Engineer
STUP Consultants Pvt. Ltd
Nagaon-782001 (Assam)

Team Leader
STUP Consultants Pvt. Ltd
Nagaon-782001 (Assam)

BEDDING DIMENSIONS

TYPE	PIPE FOUNDATION TYPE	PIPE INNER DIA (d)	b1	b2	b3
a	COMPACTED GRANULAR MATERIAL FOR FILL HEIGHT (CUSHION) 0.6m – 4.0m	1200	260	160	200
b	PCC M15 CONCRETE CRADLE FOR FILL HEIGHT (CUSHION) 4.0m – 8.0m		200	250	150

LEGENDS

FRL	–	FINISHED ROAD LEVEL.
IL	–	INVERT LEVEL.
GL	–	GROUND LEVEL
U/S	–	UP STREAM
D/S	–	DOWN STREAM
THK.	–	THICKNESS
d	–	INNER DIAMETER OF PIPE
t	–	THICKNESS OF PIPE (d/10)
LME	–	LEFT MEDIAN EDGE
RME	–	RIGHT MEDIAN EDGE
LOE	–	LEFT OUTER EDGE
ROE	–	RIGHT OUTER EDGE

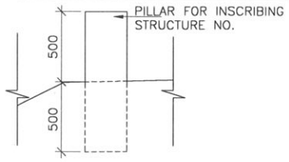

DETAIL Y

(SCALE 1:30)

DIMENSION DETAILS OF PIPE CULVERT

S.No.	EXISTING KM.	DESIGN CH.	EXISTING STRUCTURE	EXISTING SPAN (NOS. x DIA)	EXISTING WIDTH (m)	PROPOSAL	PROPOSED STRUCTURE	PROPOSED SPAN (NOS. x d)	SKEW	FRL		CAMBER/ SUPERELEVATION		FLOW DIRECTION	BED LEVEL		INVERT LEVEL (IL)		EARTH CUSHION (m)				TCS	WIDTH OF BEDDING	LENGTH OF HEAD WALL (L) (m)	LENGTH OF PIPE (m)	NO. OF PIPE SEGMENTS (REF. NOTE 9) (m)	TYPE OF BEDDING	ENCASING
										LME	RME	LEFT (e1%)	RIGHT (e2%)		LEFT	RIGHT	LEFT	RIGHT	LOE (C-3)	LME (C-1)	RME (C-2)	ROE (C-4)		A (m)					
1	-	303+618	-	-	-	NEW CONSTRUCTION	PIPE CULVERT	1 x 1.2	0	68.605	67.993	-5.000	5.000	R-L	63.455	64.240	63.155	63.215	3.580	4.112	3.477	4.009	TYPE-4	1.84	7.12	41.250	16.50	COMPACTED GRANULAR MATERIAL	NOT APPLICABLE

Rev.	Date	Description on Revisions
R1	Nov. 2017	REVISED AS PER REVISED PLAN & PROFILE
R0	Sept. 2017	

Revisions

CLIENT:- NATIONAL HIGHWAYS & INFRASTRUCTURE (Development Coporation Ltd)

AUTHORITY'S ENGINEER: STUP Consultants P. Ltd & Ayoleeza Consultants P. Ltd. — AUTHORISED SIGNATORY — DATE

PROOF CHECKED CONSULTANT: CE TESTING Company Pvt. Ltd — AUTHORISED SIGNATORY — DATE

SAEFTY CONSULTANT:- Chaitanya Projects Consultancy Pvt. Ltd — AUTHORISED SIGNATORY — DATE

PROJECT: FOUR LANING OF NH-37 FROM RANGAGARA TO KALIABOR TINIALI (CH: 297.000 KM TO CH: 315.315 KM) IN NAGAON DISTRICT IN THE STATE OF ASSAM UNDER SARDP-NE, PHASE A ON EPC MODE

EPC CONTRACTOR:- SIMPLEX INFRASTRUCTURES LIMITED, 27, SHAKESPEARE SARANI, KOLKATA-17, INDIA

CONSULTANTS:- AECOM, 9th Floor, Infinity Tower C, DLF Cyber City, DLF Phase II, Gurgaon-122002, Haryana, India — DRAWN: R. BENIWAL; DESIGN: S. YADAV; CHECKED BY: S.P. SINGH; APPROVED BY: S. RASTOGI

SCALE:- 1 : 1000

TITLE:- GENERAL ARRANGEMENT DRAWING FOR PIPE CULVERT AT CH. 303+618 (SCH. B. CH. 303+620)

DRAWING NO.:- AECOM-DELD15159-DD-DWG-PC-303+620-GAD-01 — REV. R1

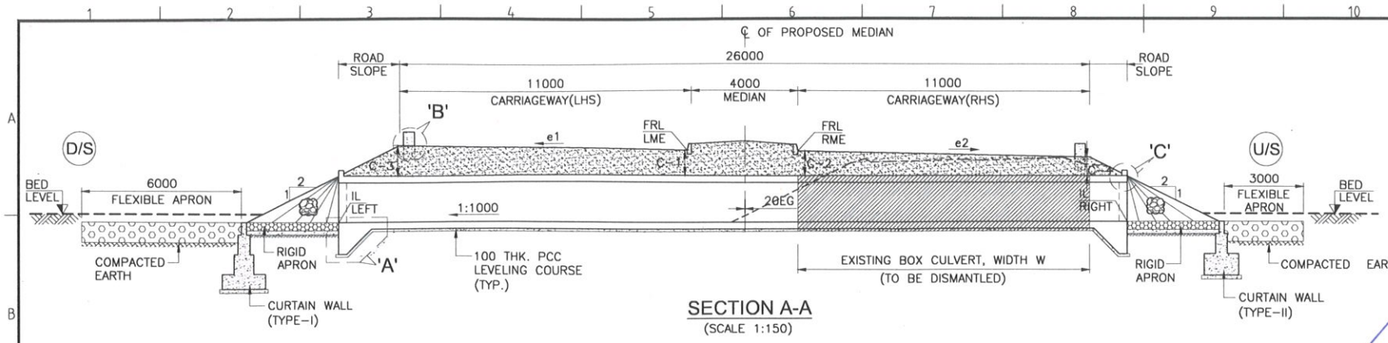

SECTION A-A
(SCALE 1:150)

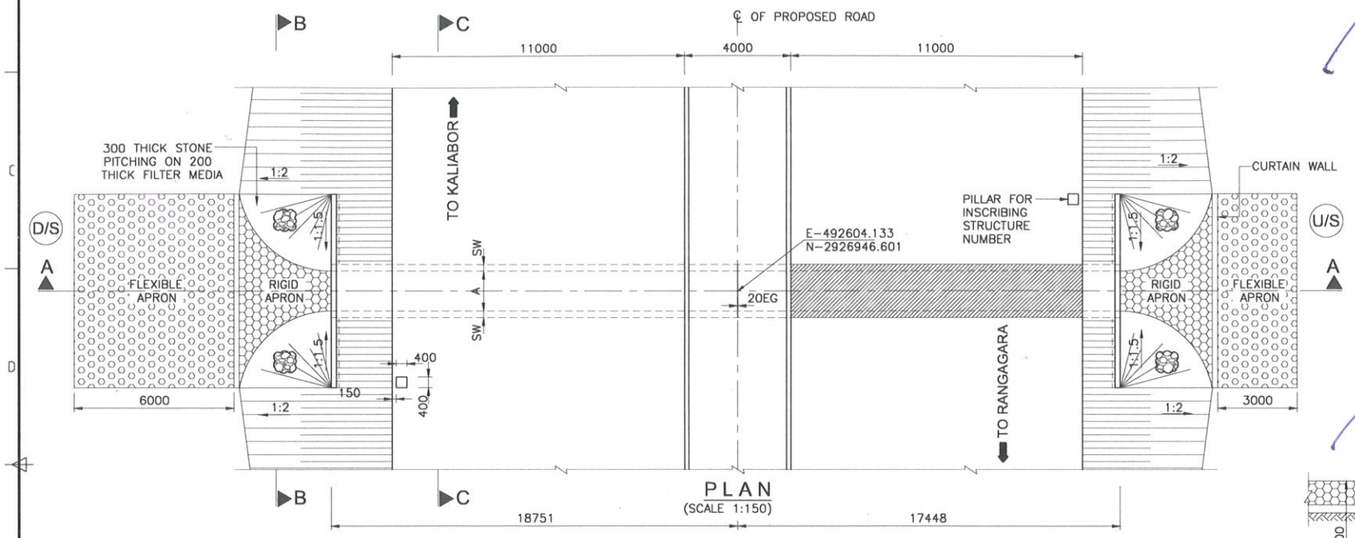

PLAN
(SCALE 1:150)

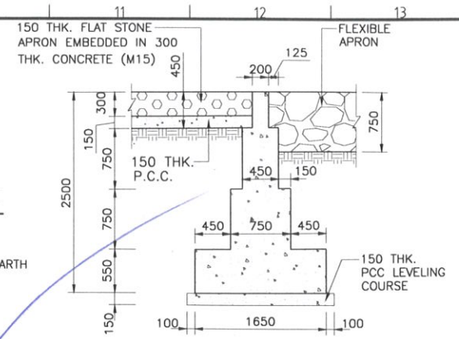

DETAILS OF PCC CURTAIN WALL TYPE-I
(SCALE 1:50)

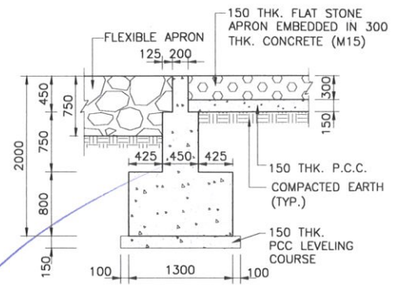

DETAILS OF PCC CURTAIN WALL TYPE-II
(SCALE 1:50)

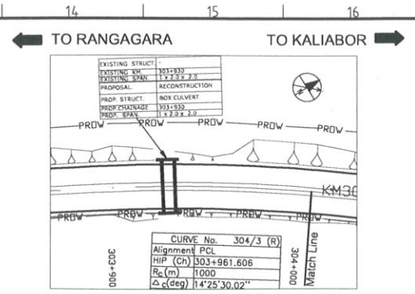

KEY PLAN

NOTES:-

1. ALL DIMENSIONS ARE IN MILLIMETERS, LEVELS ARE IN METERS UNLESS OTHERWISE MENTIONED.
2. NO DIMENSION SHALL BE MEASURED FROM THE DRAWINGS. ONLY WRITTEN DIMENSIONS SHALL BE FOLLOWED.
3. THE DRAWING SHALL BE READ IN CONJUNCTION WITH RELEVANT HIGHWAY PLAN AND PROFILE DRAWINGS. FRL, BED LEVEL, CAMBER/SUPERELEVATION AND LAYOUT SHALL ALSO BE VERIFIED AT SITE BEFORE EXECUTION. DISCEPANCIES SHALL BE BROUGHT TO THE NOTICE OF THE ENGINEER FOR REVISION IN DRAWINGS, IF ANY.
4. CHAINAGE OF THE STRUCTURE IS AT THE CENTER LINE OF THE PROPOSED STRUCTURE.
5. THE REINFORCEMENT SHALL BE HYSD BARS OF GRADE DESIGNATION Fe 500D CONFORMING TO IS 1786-2008 & IRC 112-2011.
6. CONCRETE SHALL BE DESIGN MIX WITH A MINIMUM 28 DAYS CHARACTERISTIC CUBE STRENGTH FOR DIFFERENT ELEMENTS AS FOLLOWS:
   - a. RCC BOX STRUCTURE – M30
   - b. PCC LEVELING COURSE – M15
   - c. RCC FLY RETURN WALL – M30
   - d. PCC CURTAIN WALL – M20
7. CLEAR COVER TO OUTER STEEL SHALL BE AS FOLLOWS:–
   - a. SUPERSTRUCTURE 40MM
   - b. VERTICAL FACE IN CONTACT WITH EARTH 75MM
   - c. VERTICAL FACE NOT IN CONTACT WITH EARTH 40MM
   - d. FOUNDATION 75MM
8. BACK FILLING BEHIND WALLS/ABUTMENT SHALL CONSISTS OF SELECTED EARTH CONFORMING TO APPENDIX 6 OF IRC:78-2014 HAVING PROPERTIES C=0, ϕ>=30°, γ=2.0t/cu.m.
9. FORMATION LEVEL SHOWN IS AT MEDIAN EDGE.
10. THE STRUCTURE HAS BEEN DESIGNED FOR LIVE LOAD COMBINATIONS CONFORMING TO IRC: 6-2014.
11. THE TOP OF BOTTOM RAFT SHALL BE KEPT MIN. 300MM BELOW LOWEST BED LEVEL. HOWEVER, CHANGE IN CLEAR HEIGHT OF RCC BOX SHALL NOT BE MORE THAN 500MM.
12. ALL SOLID WALLS RETAINING THE EARTH SHALL BE PROVIDED WITH WEEP HOLES (100MM DIA AND SLOPE 1V:20H) STARTING 150MM ABOVE THE GROUND LEVEL AND SPACED 1000MM C/C BOTH HORIZONTALLY AND VERTICALLY IN STAGGERED MANNER.
13. 600MM THICK FILTER MEDIA SHALL BE PROVIDED BEHIND SOLID ABUTMENT WALL & RETURN WALL.
14. CONDITION OF EXPOSURE IS MODERATE.
15. 20MM EXPANSION GAP FILLED WITH COMPRESSIBLE FIBER BOARD SHALL BE PROVIDED BETWEEN ADJACENT RCC BOXES.
16. THE SAFE BEARING CAPACITY AS PER DESIGN IS 10.39t/M². ANY VARIATION ON SITE SHOULD BE INFORMED TO THE DESIGN ENGINEER FOR NECESSARY ACTION.
17. THE LENGTH OF RIGID APRON SHALL BE AS PER ARTICLE 20 OF IRC:SP:13-2004.

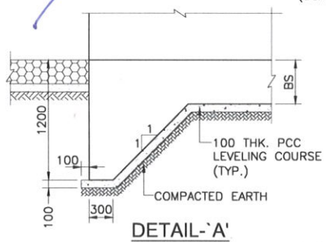

DETAIL-`A'
(SCALE 1:50)

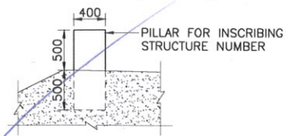

DETAIL-`B'
(SCALE 1:50)

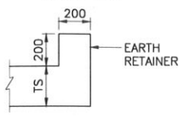

DETAIL-`C'
(SCALE 1:25)

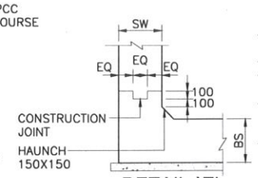

DETAIL-`E'
(SCALE 1:50)

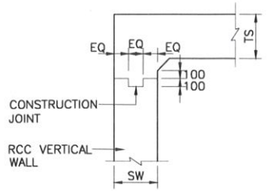

DETAIL-`D'
(SCALE 1:50)

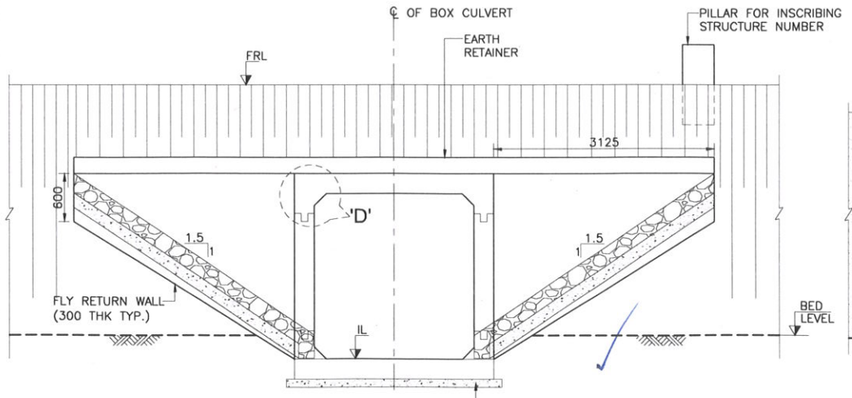

SECTION B-B
(SCALE 1:50)

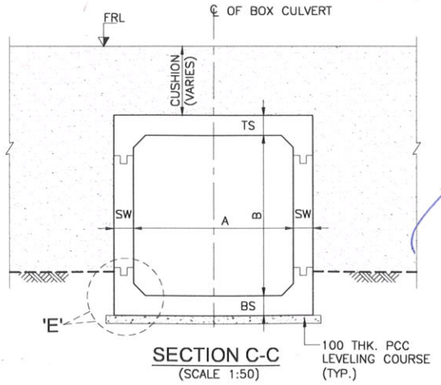

SECTION C-C
(SCALE 1:50)

LEGEND:-

FRL	–	FINISHED ROAD LEVEL
BL.	–	BED LEVEL
GL.	–	GROUND LEVEL
IL	–	INVERT LEVEL
EG	–	EXPANSION GAP
LOE	–	LEFT OUTER EDGE
ROE	–	RIGHT OUTER EDGE
LME	–	LEFT MEDIAN EDGE
RME	–	RIGHT MEDIAN EDGE
THK	–	THICKNESS
U/S	–	UPSTREAM
D/S	–	DOWNSTREAM

REFERENCE DRAWINGS.:-

1. REINFORCEMENT DETAILS FOR CULVERTS AECOM-DELD15159-DD-DWG-BC-01
2. MISCELLANEOUS DWGS. AECOM-DELD15159-MISC-01
3. FOR CONSTRUCTION JOINT AECOM-DELD15159-DD-DWG-BC-TYP-01

SCHEDULE OF BOX CULVERT

S.No.	EXISTING KM.	DESIGN CH.	EXISTING SPAN (NOS. x C/C OF EXP.)	EXISTING CULVERT	EXISTING WIDTH,W (m)	SKEW	PROPOSAL	PROPOSED STRUCTURE	PROPOSED SPAN (NOS. x L)	FRL		CAMBER/ SUPERELEVATION		BED LEVEL		INVERT LEVEL		TCS	FLOW OF DIRECTION	CUSHION (m)				RCC BOX DIMENSIONS (m)					BARREL LENGTH OF BOX (m)	REINFORCEMENT CATEGORY (REFER REINF. DRAWING)
										LME	RME	LEFT (e1)	RIGHT (e2)	LEFT	RIGHT	LEFT	RIGHT			LOE (C-3)	LME (C-1)	RME (C-2)	ROE (C-4)	A	B	TS	BS	SW		
1	303+930	303+930	1 x 2.0 x 2.0	BOX CULVERT	11	0	RECONSTRUCTION	BOX CULVERT	1 x 2.0 x2.0	67.513	67.513	2.84	-2.84	63.000	63.266	62.694	62.730	TYPE-4	R-L	2.875	2.552	2.548	2.224	2.000	2.000	0.250	0.300	0.250	36.199	2C

Rev.	Date	Description on Revisions
R0	JULY 2018	FIRST SUBMISSION

Revisions

CLIENT:- NATIONAL HIGHWAYS & INFRASTRUCTURE (Development Coporation Ltd)

AUTHORITY'S ENGINEER: STUP Consultants P. Ltd & Ayolecza Consultants P. Ltd. — AUTHORISED SIGNATORY | DATE

PROOF CHECKED CONSULTANT:- CE TESTING Company Pvt. Ltd — AUTHORISED SIGNATORY | DATE

SAEFTY CONSULTANT:- Chaitanya Projects Consultancy Pvt. Ltd — AUTHORISED SIGNATORY | DATE

PROJECT: FOUR LANING OF NH-37 FROM RANGAGARA TO KALIABOR TINIALI (CH: 297.000 KM TO CH: 315.315 KM) IN NAGAON DISTRICT IN THE STATE OF ASSAM UNDER SARDP-NE, PHASE A ON EPC MODE

EPC CONTRACTOR:- SIMPLEX INFRASTRUCTURES LIMITED, 27, SHAKESPEARE SARANI, KOLKATA-17, INDIA

CONSULTANTS:- AECOM, 9th Floor, Infinity Tower C DLF Cyber City DLF Phase II, Gurgaon-122002, Haryana, India

R. BENIWAL	S. YADAV	S.P. SINGH	S. RASTOGI
DRAWN	DESIGN	CHECKED BY	APPROVED BY

SCALE:- 1 : 1000

TITLE:- GENERAL ARRANGEMENT DRAWING FOR RCC BOX CULVERT AT CH. 303+930 (SCH. CH. 303+930)

DRAWING NO.:- AECOM-DELD15159-DD-DWG-BC-303+930-GAD-01 — REV. R0

Bridge Engineer, Stup Consultants Pvt. Ltd, Nagaon-782002

Resident Engineer, STUP Consultants Pvt. Ltd, Nagaon-782002 (Assam)

Team Leader, STUP Consultants Pvt. Ltd, Nagaon-782002 (Assam)

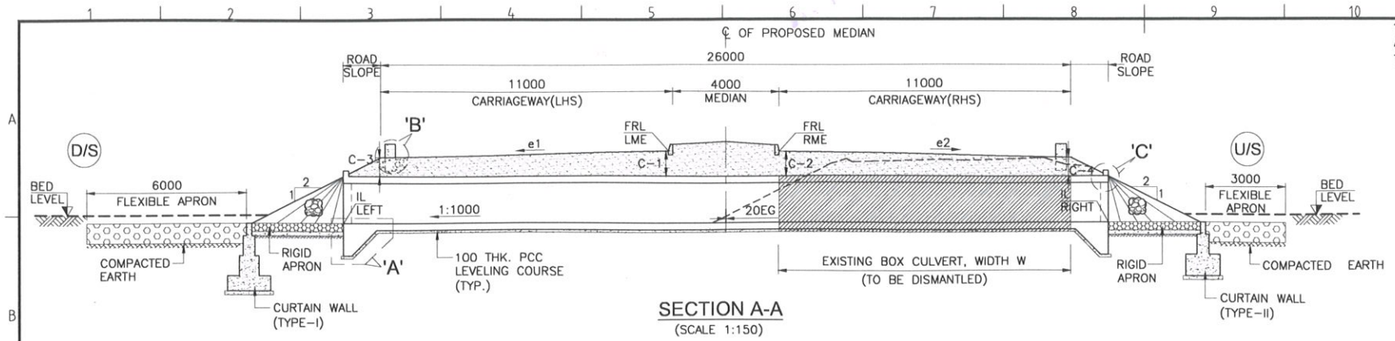

SECTION A-A
(SCALE 1:150)

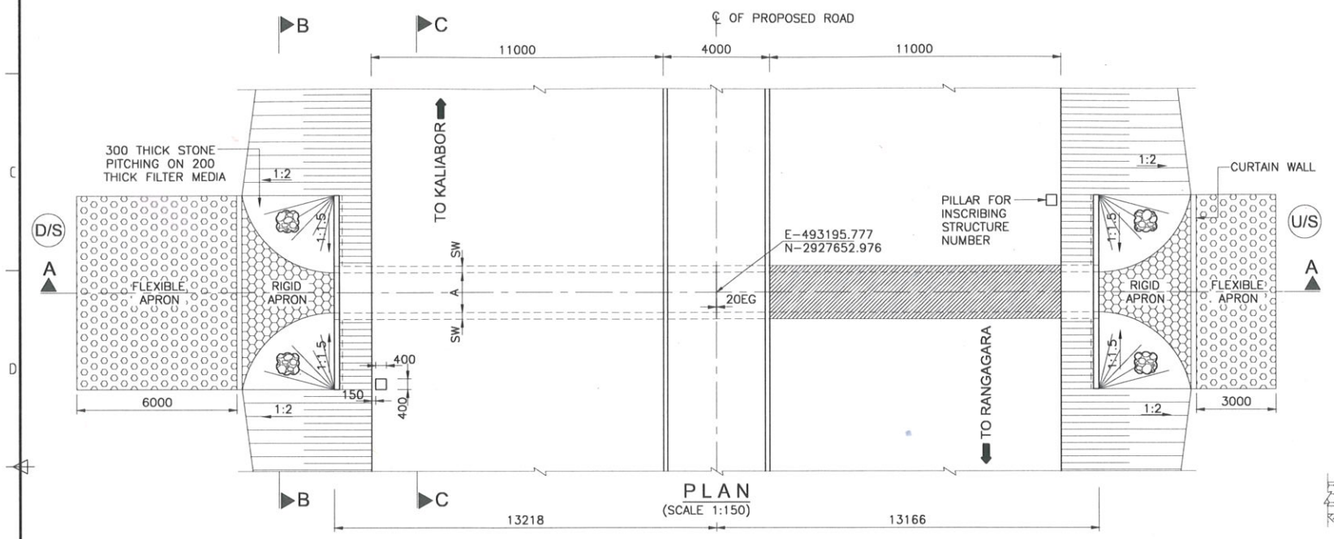

PLAN
(SCALE 1:150)

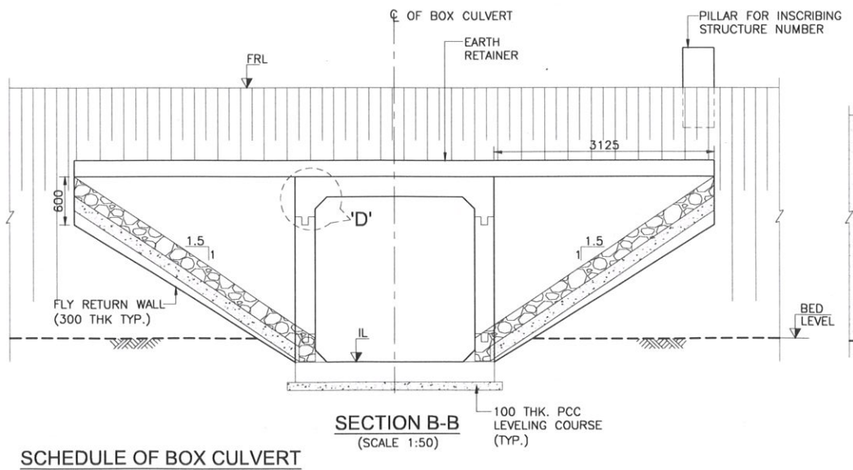

SECTION B-B
(SCALE 1:50)

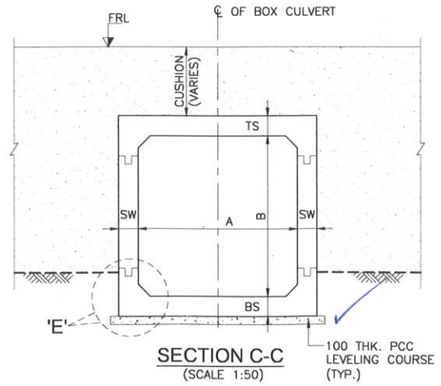

SECTION C-C
(SCALE 1:50)

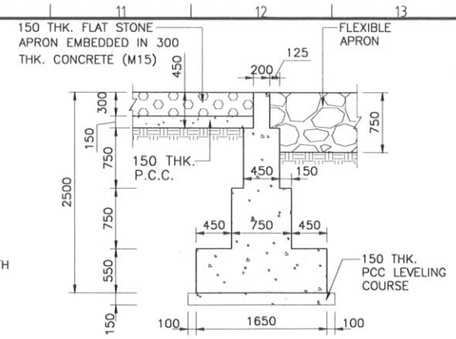

DETAILS OF PCC CURTAIN WALL TYPE-I
(SCALE 1:50)

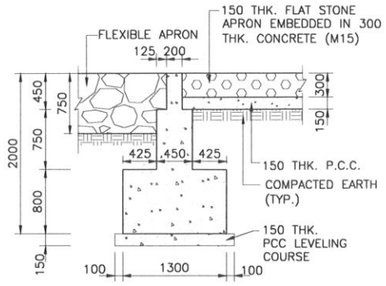

DETAILS OF PCC CURTAIN WALL TYPE-II
(SCALE 1:50)

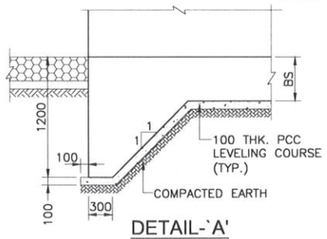

DETAIL-`A'
(SCALE 1:50)

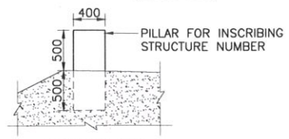

DETAIL-`B'
(SCALE 1:50)

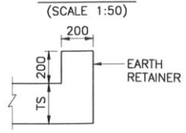

DETAIL-`C'
(SCALE 1:25)

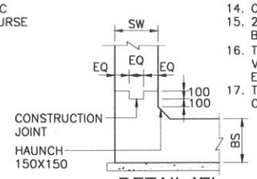

DETAIL-`E'
(SCALE 1:50)

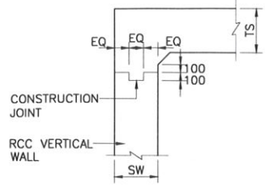

DETAIL-`D'
(SCALE 1:50)

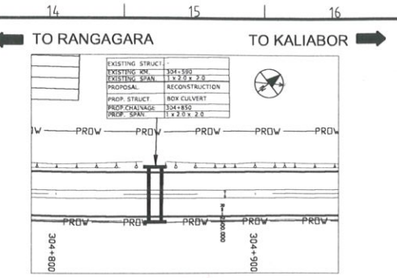

KEY PLAN

NOTES:-

1. ALL DIMENSIONS ARE IN MILLIMETERS, LEVELS ARE IN METERS UNLESS OTHERWISE MENTIONED.
2. NO DIMENSION SHALL BE MEASURED FROM THE DRAWINGS. ONLY WRITTEN DIMENSIONS SHALL BE FOLLOWED.
3. THE DRAWING SHALL BE READ IN CONJUNCTION WITH RELEVANT HIGHWAY PLAN AND PROFILE DRAWINGS. FRL, BED LEVEL, CAMBER/SUPERELEVATION AND LAYOUT SHALL ALSO BE VERIFIED AT SITE BEFORE EXECUTION. DISCEPANCIES SHALL BE BROUGHT TO THE NOTICE OF THE ENGINEER FOR REVISION IN DRAWINGS, IF ANY.
4. CHAINAGE OF THE STRUCTURE IS AT THE CENTER LINE OF THE PROPOSED STRUCTURE.
5. THE REINFORCEMENT SHALL BE HYSD BARS OF GRADE DESIGNATION Fe 500D CONFORMING TO IS 1786-2008 & IRC 112-2011.
6. CONCRETE SHALL BE DESIGN MIX WITH A MINIMUM 28 DAYS CHARACTERISTIC CUBE STRENGTH FOR DIFFERENT ELEMENTS AS FOLLOWS:
   - a. RCC BOX STRUCTURE – M30
   - b. PCC LEVELING COURSE – M15
   - c. RCC FLY RETURN WALL – M30
   - d. PCC CURTAIN WALL – M20
7. CLEAR COVER TO OUTER STEEL SHALL BE AS FOLLOWS:-
   - a. SUPERSTRUCTURE 40MM
   - b. VERTICAL FACE IN CONTACT WITH EARTH 75MM
   - c. VERTICAL FACE NOT IN CONTACT WITH EARTH 40MM
   - d. FOUNDATION 75MM
8. BACK FILLING BEHIND WALLS/ABUTMENT SHALL CONSISTS OF SELECTED EARTH CONFORMING TO APPENDIX 6 OF IRC:78-2014 HAVING PROPERTIES C=0, ø>=30', γ=2.0t/cu.m.
9. FORMATION LEVEL SHOWN IS AT MEDIAN EDGE.
10. THE STRUCTURE HAS BEEN DESIGNED FOR LIVE LOAD COMBINATIONS CONFORMING TO IRC: 6-2014.
11. THE TOP OF BOTTOM RAFT SHALL BE KEPT MIN. 300MM BELOW LOWEST BED LEVEL. HOWEVER, CHANGE IN CLEAR HEIGHT OF RCC BOX SHALL NOT BE MORE THAN 500MM.
12. ALL SOLID WALLS RETAINING THE EARTH SHALL BE PROVIDED WITH WEEP HOLES (100MM DIA AND SLOPE 1V:20H) STARTING 150MM ABOVE THE GROUND LEVEL AND SPACED 1000MM C/C BOTH HORIZONTALLY AND VERTICALLY IN STAGGERED MANNER.
13. 600MM THICK FILTER MEDIA SHALL BE PROVIDED BEHIND SOLID ABUTMENT WALL & RETURN WALL.
14. CONDITION OF EXPOSURE IS MODERATE.
15. 20MM EXPANSION GAP FILLED WITH COMPRESSIBLE FIBER BOARD SHALL BE PROVIDED BETWEEN ADJACENT RCC BOXES.
16. THE SAFE BEARING CAPACITY AS PER DESIGN IS 6.39t/M². ANY VARIATION ON SITE SHOULD BE INFORMED TO THE DESIGN ENGINEER FOR NECESSARY ACTION.
17. THE LENGTH OF RIGID APRON SHALL BE AS PER ARTICLE 20 OF IRC:SP:13-2004.

LEGEND:-

FRL	–	FINISHED ROAD LEVEL
BL.	–	BED LEVEL
GL.	–	GROUND LEVEL
IL.	–	INVERT LEVEL
EG	–	EXPANSION GAP
LOE	–	LEFT OUTER EDGE
ROE	–	RIGHT OUTER EDGE
LME	–	LEFT MEDIAN EDGE
RME	–	RIGHT MEDIAN EDGE
THK	–	THICKNESS
U/S	–	UPSTREAM
D/S	–	DOWNSTREAM

REFERENCE DRAWINGS.:-

1. REINFORCEMENT DETAILS FOR CULVERTS AECOM-DELD15159-DD-DWG-BC-01
2. MISCELLANEOUS DWGS. AECOM-DELD15159-MISC-01
3. FOR CONSTRUCTION JOINT AECOM-DELD15159-DD-DWG-BC-TYP-01

SCHEDULE OF BOX CULVERT

S.No.	EXISTING KM.	DESIGN CH.	EXISTING SPAN (NOS. x C/C OF EXP.)	EXISTING CULVERT	EXISTING WIDTH,W (m)	SKEW	PROPOSAL	PROPOSED STRUCTURE	PROPOSED SPAN (NOS. x L)	FRL		CAMBER/ SUPERELEVATION		BED LEVEL		INVERT LEVEL		TCS	FLOW OF DIRECTION	CUSHION (m)				RCC BOX DIMENSIONS (m)					BARREL LENGTH OF BOX (m)	REINFORCEMENT CATEGORY (REFER REINF. DRAWING)
										LME	RME	LEFT (e1)	RIGHT (e2)	LEFT	RIGHT	LEFT	RIGHT			LOE (C-3)	LME (C-1)	RME (C-2)	ROE (C-4)	A	B	TS	BS	SW		
1	304+590	304+850	1 x 2.0 x 2.0	BOX CULVERT	11.6	0	RECONSTRUCTION	BOX CULVERT	1 x 2.0 x2.0	67.922	67.922	-2.500	-2.500	65.663	65.777	65.287	65.314	TYPE-4	R-L	0.109	0.373	0.369	0.083	2.000	2.000	0.250	0.300	0.250	26.384	2A

Rev.	Date	Description on Revisions
R0	JULY 2018	FIRST SUBMISSION

Revisions

CLIENT:- NATIONAL HIGHWAYS & INFRASTRUCTURE (Development Coporation Ltd)

AUTHORITY'S ENGINEER: STUP Consultants P. Ltd & Ayoleeza Consultants P. Ltd — AUTHORISED SIGNATORY — DATE

PROOF CHECKED CONSULTANT: CE TESTING Company Pvt. Ltd — AUTHORISED SIGNATORY — DATE

SAEFTY CONSULTANT:- Chaitanya Projects Consultancy Pvt. Ltd — AUTHORISED SIGNATORY — DATE

PROJECT: FOUR LANING OF NH-37 FROM RANGAGARA TO KALIABOR TINIALI (CH: 297.000 KM TO CH: 315.315 KM) IN NAGAON DISTRICT IN THE STATE OF ASSAM UNDER SARDP-NE, PHASE A ON EPC MODE

EPC CONTRACTOR:- SIMPLEX INFRASTRUCTURES LIMITED, 27, SHAKESPEARE SARANI, KOLKATA-17, INDIA

CONSULTANTS:- AECOM, 9th Floor, Infinity Tower C, DLF Cybercity, DLF Phase II, Gurgaon-122002, Haryana, India

DRAWN	DESIGN	CHECKED BY	APPROVED BY
R. BENIWAL	S. YADAV	S.P. SINGH	S. RASTOGI

SCALE:- 1 : 1000

TITLE:- GENERAL ARRANGEMENT DRAWING FOR RCC BOX CULVERT AT CH. 304+850 (SCH. CH. 304+590)

DRAWING NO.:- AECOM-DELD15159-DD-DWG-BC-304+850-GAD-01 — REV. R0

Bridge Engineer, Stup Consultants Pvt. Ltd., Nagaon-782001 (Assam)

Resident Engineer, STUP Consultant Pvt. Ltd., Nagaon-782001 (Assam)

Team Leader, STUP Consultants Pvt. Ltd, Nagaon-782001 (Assam)

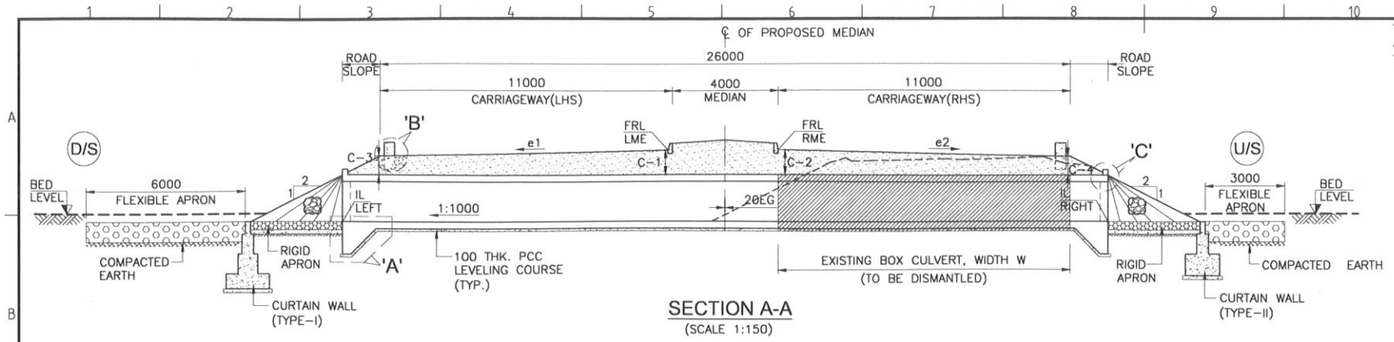

SECTION A-A
(SCALE 1:150)

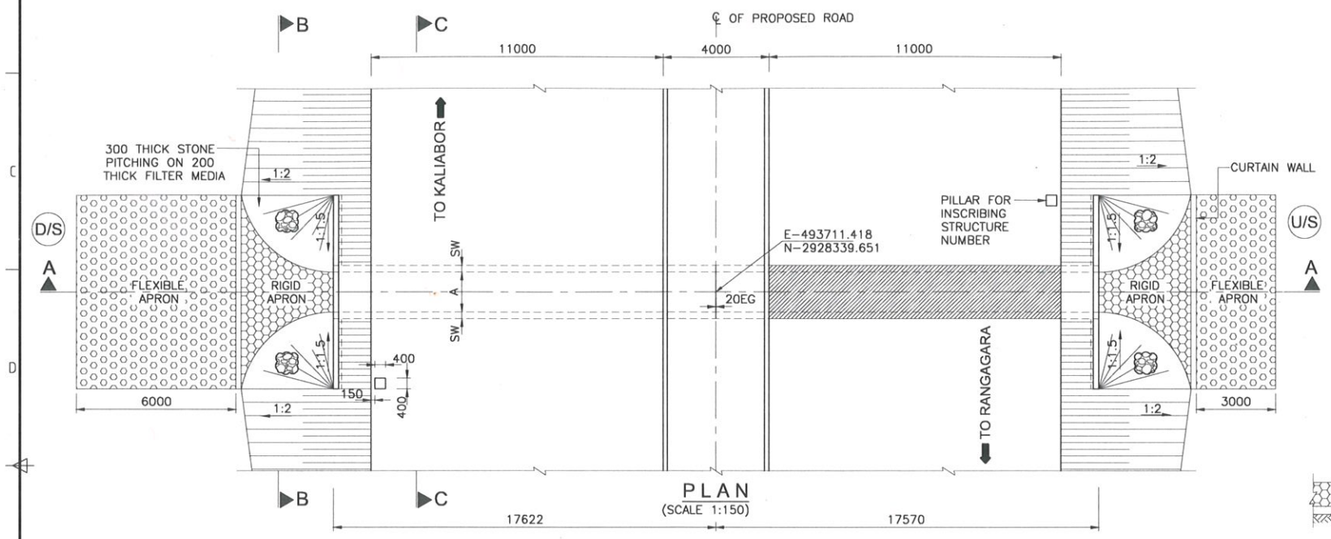

PLAN
(SCALE 1:150)

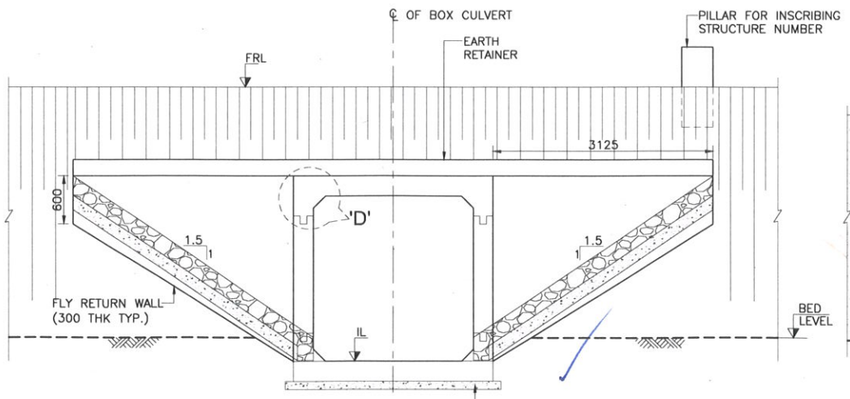

SECTION B-B
(SCALE 1:50)

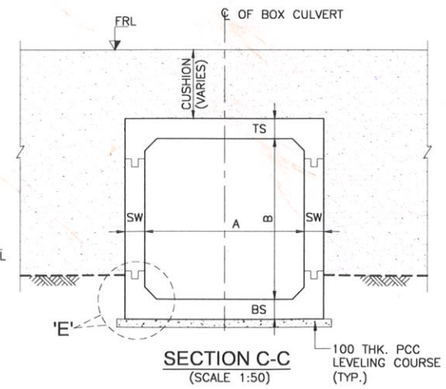

SECTION C-C
(SCALE 1:50)

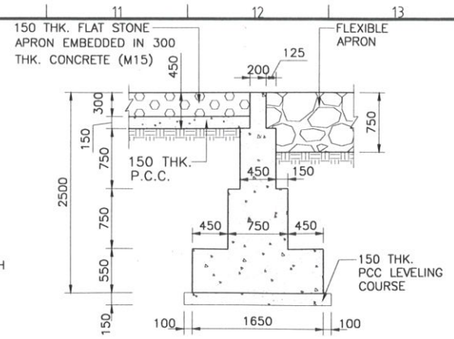

DETAILS OF PCC CURTAIN WALL TYPE-I
(SCALE 1:50)

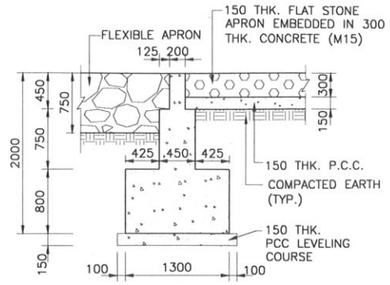

DETAILS OF PCC CURTAIN WALL TYPE-II
(SCALE 1:50)

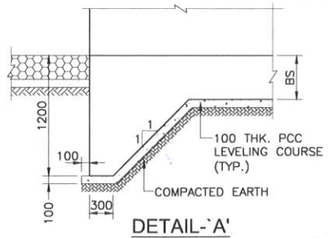

DETAIL-`A'
(SCALE 1:50)

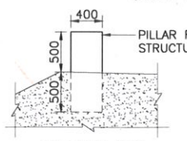

DETAIL-`B'
(SCALE 1:50)

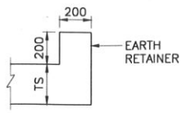

DETAIL-`C'
(SCALE 1:25)

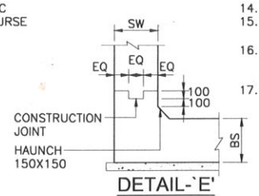

DETAIL-`E'
(SCALE 1:50)

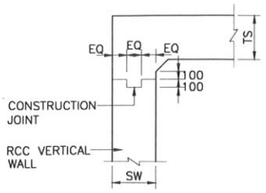

DETAIL-`D'
(SCALE 1:50)

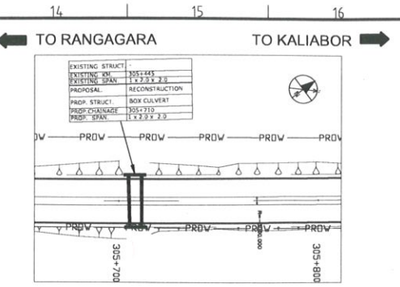

KEY PLAN

NOTES:-

1. ALL DIMENSIONS ARE IN MILLIMETERS, LEVELS ARE IN METERS UNLESS OTHERWISE MENTIONED.
2. NO DIMENSION SHALL BE MEASURED FROM THE DRAWINGS. ONLY WRITTEN DIMENSIONS SHALL BE FOLLOWED.
3. THE DRAWING SHALL BE READ IN CONJUNCTION WITH RELEVANT HIGHWAY PLAN AND PROFILE DRAWINGS. FRL, BED LEVEL, CAMBER/SUPERELEVATION AND LAYOUT SHALL ALSO BE VERIFIED AT SITE BEFORE EXECUTION. DISCEPANCIES SHALL BE BROUGHT TO THE NOTICE OF THE ENGINEER FOR REVISION IN DRAWINGS, IF ANY.
4. CHAINAGE OF THE STRUCTURE IS AT THE CENTER LINE OF THE PROPOSED STRUCTURE.
5. THE REINFORCEMENT SHALL BE HYSD BARS OF GRADE DESIGNATION Fe 500D CONFORMING TO IS 1786-2008 & IRC 112-2011.
6. CONCRETE SHALL BE DESIGN MIX WITH A MINIMUM 28 DAYS CHARACTERISTIC CUBE STRENGTH FOR DIFFERENT ELEMENTS AS FOLLOWS:
   - a.RCC BOX STRUCTURE – M30
   - b.PCC LEVELING COURSE – M15
   - c.RCC FLY RETURN WALL – M30
   - d.PCC CURTAIN WALL – M20
7. CLEAR COVER TO OUTER STEEL SHALL BE AS FOLLOWS:-
   - a.SUPERSTRUCTURE 40MM
   - b.VERTICAL FACE IN CONTACT WITH EARTH 75MM
   - c.VERTICAL FACE NOT IN CONTACT WITH EARTH 40MM
   - d.FOUNDATION 75MM
8. BACK FILLING BEHIND WALLS/ABUTMENT SHALL CONSISTS OF SELECTED EARTH CONFORMING TO APPENDIX 6 OF IRC:78-2014 HAVING PROPERTIES C=0, ø>=30°, γ=2.0t/cu.m.
9. FORMATION LEVEL SHOWN IS AT MEDIAN EDGE.
10. THE STRUCTURE HAS BEEN DESIGNED FOR LIVE LOAD COMBINATIONS CONFORMING TO IRC: 6-2014.
11. THE TOP OF BOTTOM RAFT SHALL BE KEPT MIN. 300MM BELOW LOWEST BED LEVEL. HOWEVER, CHANGE IN CLEAR HEIGHT OF RCC BOX SHALL NOT BE MORE THAN 500MM.
12. ALL SOLID WALLS RETAINING THE EARTH SHALL BE PROVIDED WITH WEEP HOLES (100MM DIA AND SLOPE 1V:20H) STARTING 150MM ABOVE THE GROUND LEVEL AND SPACED 1000MM C/C BOTH HORIZONTALLY AND VERTICALLY IN STAGGERED MANNER.
13. 600MM THICK FILTER MEDIA SHALL BE PROVIDED BEHIND SOLID ABUTMENT WALL & RETURN WALL.
14. CONDITION OF EXPOSURE IS MODERATE.
15. 20MM EXPANSION GAP FILLED WITH COMPRESSIBLE FIBER BOARD SHALL BE PROVIDED BETWEEN ADJACENT RCC BOXES.
16. THE SAFE BEARING CAPACITY AS PER DESIGN IS 10.39t/M². ANY VARIATION ON SITE SHOULD BE INFORMED TO THE DESIGN ENGINEER FOR NECESSARY ACTION.
17. THE LENGTH OF RIGID APRON SHALL BE AS PER ARTICLE 20 OF IRC:SP:13-2004.

LEGEND:-

FRL	–	FINISHED ROAD LEVEL
BL.	–	BED LEVEL
GL.	–	GROUND LEVEL
IL	–	INVERT LEVEL
EG	–	EXPANSION GAP
LOE	–	LEFT OUTER EDGE
ROE	–	RIGHT OUTER EDGE
LME	–	LEFT MEDIAN EDGE
RME	–	RIGHT MEDIAN EDGE
THK	–	THICKNESS
U/S	–	UPSTREAM
D/S	–	DOWNSTREAM

REFERENCE DRAWINGS.:-

1. REINFORCEMENT DETAILS FOR CULVERTS AECOM-DELD15159-DD-DWG-BC-01
2. MISCELLANEOUS DWGS. AECOM-DELD15159-MISC-01
3. FOR CONSTRUCTION JOINT AECOM-DELD15159-DD-DWG-BC-TYP-01

SCHEDULE OF BOX CULVERT

S.No.	EXISTING KM.	DESIGN CH.	EXISTING SPAN (NOS. x C/C OF EXP.)	EXISTING CULVERT	EXISTING WIDTH,W (m)	SKEW	PROPOSAL	PROPOSED STRUCTURE	PROPOSED SPAN (NOS. x L)	FRL		CAMBER/ SUPERELEVATION		BED LEVEL		INVERT LEVEL		TCS	FLOW OF DIRECTION	CUSHION (m)				RCC BOX DIMENSIONS (m)					BARREL LENGTH OF BOX (m)	REINFORCEMENT CATEGORY (REFER REINF. DRAWING)
										LME	RME	LEFT (e1)	RIGHT (e2)	LEFT	RIGHT	LEFT	RIGHT			LOE (C-3)	LME (C-1)	RME (C-2)	ROE (C-4)	A	B	TS	BS	SW		
1	305+445	305+710	1 x 2.0 x 2.0	BOX CULVERT	11.6	0	RECONSTRUCTION	BOX CULVERT	1 x 2.0 x2.0	68.536	68.536	-2.500	-2.500	64.000	65.000	63.695	63.730	TYPE-4	R-L	2.311	2.575	2.571	2.285	2.000	2.000	0.250	0.300	0.250	35.192	2C

Rev.	Date	Description on Revisions
R0	JULY 2018	FIRST SUBMISSION

Revisions

CLIENT:- NATIONAL HIGHWAYS & INFRASTRUCTURE (Development Coporation Ltd)

AUTHORITY'S ENGINEER: STUP Consultants P. Ltd & Ayoleeza Consultants P. Ltd — AUTHORISED SIGNATORY | DATE

PROOF CHECKED CONSULTANT:- CE TESTING Company Pvt. Ltd — AUTHORISED SIGNATORY | DATE

SAEFTY CONSULTANT:- Chaitanya Projects Consultancy Pvt. Ltd — AUTHORISED SIGNATORY | DATE

PROJECT: FOUR LANING OF NH-37 FROM RANGAGARA TO KALIABOR TINIALI (CH: 297.000 KM TO CH: 315.315 KM) IN NAGAON DISTRICT IN THE STATE OF ASSAM UNDER SARDP-NE, PHASE A ON EPC MODE

EPC CONTRACTOR:- SIMPLEX INFRASTRUCTURES LIMITED, 27, SHAKESPEARE SARANI, KOLKATA-17, INDIA

CONSULTANTS:- AECOM, 9th Floor, Infinity Tower C DLF Cyber City, DLF Phase II, Gurgaon-122002, Haryana, India

R. BENIWAL	S. YADAV	S.P. SINGH	S. RASTOGI
DRAWN	DESIGN	CHECKED BY	APPROVED BY

SCALE:- 1 : 1000

TITLE:- GENERAL ARRANGEMENT DRAWING FOR RCC BOX CULVERT AT CH. 305+710 (SCH. CH. 305+445)

DRAWING NO.:- AECOM-DELD15159-DD-DWG-BC-305+710-GAD-01 — REV. R0

Bridge Engineer, Stup Consultants Pvt. Ltd., Nagaon-782001 (Assam)

Resident Engineer, STUP Consultant Pvt. Ltd., Nagaon-782001 (Assam)

Team Leader, STUP Consultants Pvt. Ltd, Nagaon-782001 (Assam)

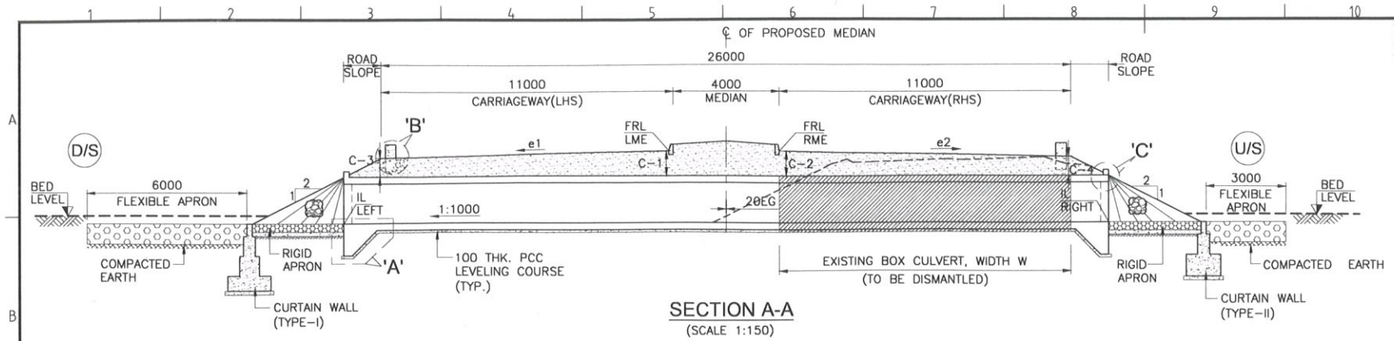

SECTION A-A
(SCALE 1:150)

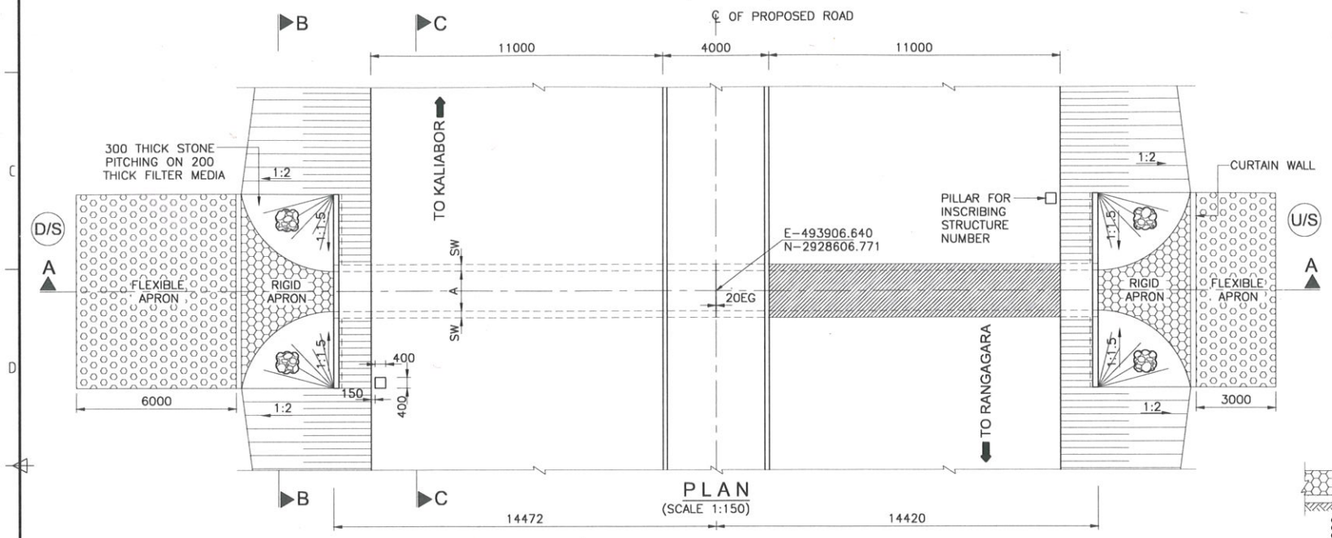

PLAN
(SCALE 1:150)

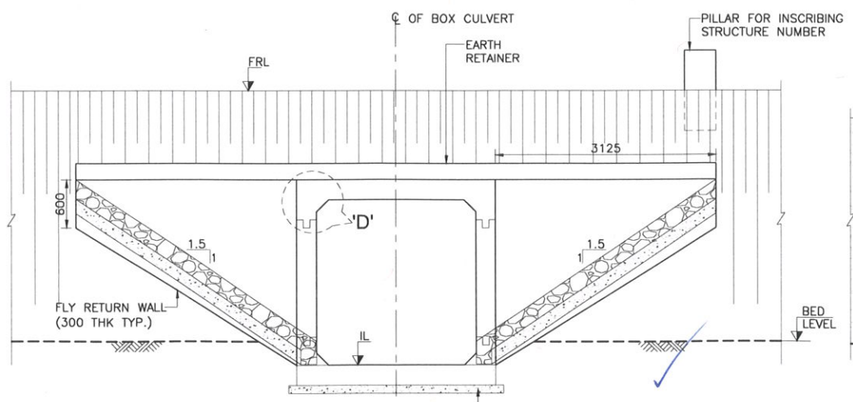

SECTION B-B
(SCALE 1:50)

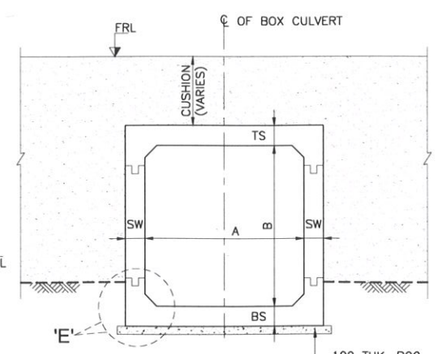

SECTION C-C
(SCALE 1:50)

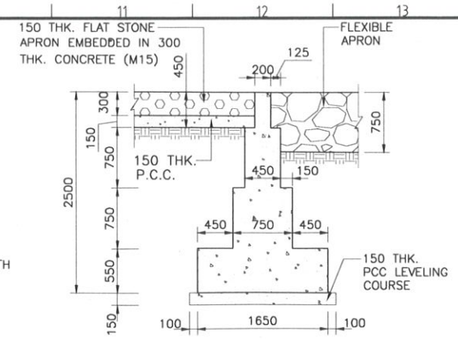

DETAILS OF PCC CURTAIN WALL TYPE-I
(SCALE 1:50)

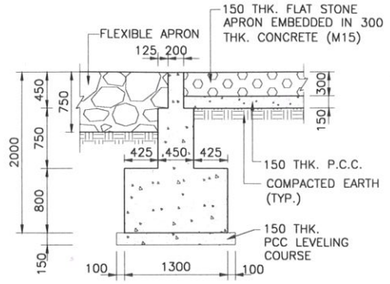

DETAILS OF PCC CURTAIN WALL TYPE-II
(SCALE 1:50)

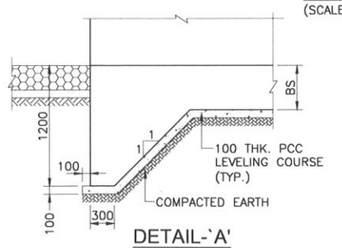

DETAIL-`A'
(SCALE 1:50)

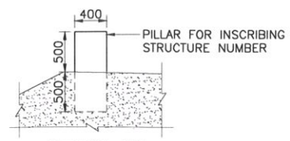

DETAIL-`B'
(SCALE 1:50)

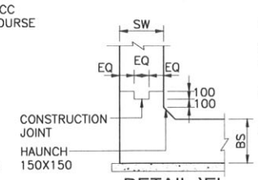

DETAIL-`E'
(SCALE 1:50)

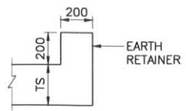

DETAIL-`C'
(SCALE 1:25)

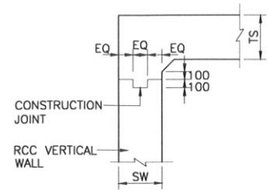

DETAIL-`D'
(SCALE 1:50)

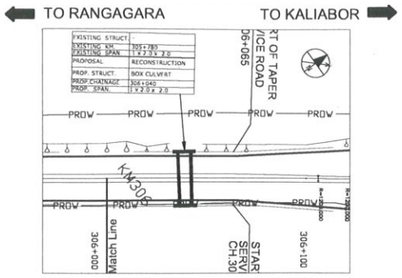

KEY PLAN

NOTES:-

1. ALL DIMENSIONS ARE IN MILLIMETERS, LEVELS ARE IN METERS UNLESS OTHERWISE MENTIONED.
2. NO DIMENSION SHALL BE MEASURED FROM THE DRAWINGS. ONLY WRITTEN DIMENSIONS SHALL BE FOLLOWED.
3. THE DRAWING SHALL BE READ IN CONJUNCTION WITH RELEVANT HIGHWAY PLAN AND PROFILE DRAWINGS. FRL, BED LEVEL, CAMBER/SUPERELEVATION AND LAYOUT SHALL ALSO BE VERIFIED AT SITE BEFORE EXECUTION. DISCEPANCIES SHALL BE BROUGHT TO THE NOTICE OF THE ENGINEER FOR REVISION IN DRAWINGS, IF ANY.
4. CHAINAGE OF THE STRUCTURE IS AT THE CENTER LINE OF THE PROPOSED STRUCTURE.
5. THE REINFORCEMENT SHALL BE HYSD BARS OF GRADE DESIGNATION Fe 500D CONFORMING TO IS 1786-2008 & IRC 112-2011.
6. CONCRETE SHALL BE DESIGN MIX WITH A MINIMUM 28 DAYS CHARACTERISTIC CUBE STRENGTH FOR DIFFERENT ELEMENTS AS FOLLOWS:
   - a. RCC BOX STRUCTURE – M30
   - b. PCC LEVELING COURSE – M15
   - c. RCC FLY RETURN WALL – M30
   - d. PCC CURTAIN WALL – M20
7. CLEAR COVER TO OUTER STEEL SHALL BE AS FOLLOWS:-
   - a. SUPERSTRUCTURE 40MM
   - b. VERTICAL FACE IN CONTACT WITH EARTH 75MM
   - c. VERTICAL FACE NOT IN CONTACT WITH EARTH 40MM
   - d. FOUNDATION 75MM
8. BACK FILLING BEHIND WALLS/ABUTMENT SHALL CONSISTS OF SELECTED EARTH CONFORMING TO APPENDIX 6 OF IRC:78-2014 HAVING PROPERTIES C=0, ø>=30°, γ=2.0t/cu.m.
9. FORMATION LEVEL SHOWN IS AT MEDIAN EDGE.
10. THE STRUCTURE HAS BEEN DESIGNED FOR LIVE LOAD COMBINATIONS CONFORMING TO IRC: 6-2014.
11. THE TOP OF BOTTOM RAFT SHALL BE KEPT MIN. 300MM BELOW LOWEST BED LEVEL. HOWEVER, CHANGE IN CLEAR HEIGHT OF RCC BOX SHALL NOT BE MORE THAN 500MM.
12. ALL SOLID WALLS RETAINING THE EARTH SHALL BE PROVIDED WITH WEEP HOLES (100MM DIA AND SLOPE 1V:20H) STARTING 150MM ABOVE THE GROUND LEVEL AND SPACED 1000MM C/C BOTH HORIZONTALLY AND VERTICALLY IN STAGGERED MANNER.
13. 600MM THICK FILTER MEDIA SHALL BE PROVIDED BEHIND SOLID ABUTMENT WALL & RETURN WALL.
14. CONDITION OF EXPOSURE IS MODERATE.
15. 20MM EXPANSION GAP FILLED WITH COMPRESSIBLE FIBER BOARD SHALL BE PROVIDED BETWEEN ADJACENT RCC BOXES.
16. THE SAFE BEARING CAPACITY AS PER DESIGN IS 6.39t/M². ANY VARIATION ON SITE SHOULD BE INFORMED TO THE DESIGN ENGINEER FOR NECESSARY ACTION.
17. THE LENGTH OF RIGID APRON SHALL BE AS PER ARTICLE 20 OF IRC:SP:13-2004.

LEGEND:-

FRL	–	FINISHED ROAD LEVEL
BL.	–	BED LEVEL
GL.	–	GROUND LEVEL
IL	–	INVERT LEVEL
EG	–	EXPANSION GAP
LOE	–	LEFT OUTER EDGE
ROE	–	RIGHT OUTER EDGE
LME	–	LEFT MEDIAN EDGE
RME	–	RIGHT MEDIAN EDGE
THK	–	THICKNESS
U/S	–	UPSTREAM
D/S	–	DOWNSTREAM

REFERENCE DRAWINGS.:-

1. REINFORCEMENT DETAILS FOR CULVERTS AECOM-DELD15159-DD-DWG-BC-01
2. MISCELLANEOUS DWGS. AECOM-DELD15159-MISC-01
3. FOR CONSTRUCTION JOINT AECOM-DELD15159-DD-DWG-BC-TYP-01

SCHEDULE OF BOX CULVERT

S.No.	EXISTING KM.	DESIGN CH.	EXISTING SPAN (NOS. x C/C OF EXP.)	EXISTING CULVERT	EXISTING WIDTH,W (m)	SKEW	PROPOSAL	PROPOSED STRUCTURE	PROPOSED SPAN (NOS. x L)	FRL		CAMBER/ SUPERELEVATION		BED LEVEL		INVERT LEVEL		TCS	FLOW OF DIRECTION	CUSHION (m)				RCC BOX DIMENSIONS (m)					BARREL LENGTH OF BOX (m)	REINFORCEMENT CATEGORY (REFER REINF. DRAWING)
										LME	RME	LEFT (e1)	RIGHT (e2)	LEFT	RIGHT	LEFT	RIGHT			LOE (C-3)	LME (C-1)	RME (C-2)	ROE (C-4)	A	B	TS	BS	SW		
1	305+780	306+040	1 x 2.0 x 2.0	BOX CULVERT	15.9	0	RECONSTRUCTION	BOX CULVERT	1 x 2.0 x2.0	68.936	68.936	-2.500	-2.500	65.975	66.168	65.673	65.702	TYPE-4	R-L	0.736	1.000	0.996	0.710	2.000	2.000	0.250	0.300	0.250	28.892	2A

Rev.	Date	Description on Revisions
R0	JULY 2018	FIRST SUBMISSION

Revisions

CLIENT:- NATIONAL HIGHWAYS & INFRASTRUCTURE (Development Coporation Ltd)

AUTHORITY'S ENGINEER: STUP Consultants P. Ltd & Ayoleeza Consultants P. Ltd.

PROOF CHECKED CONSULTANT: CE TESTING Company Pvt. Ltd

SAEFTY CONSULTANT:- Chaitanya Projects Consultancy Pvt. Ltd

PROJECT: FOUR LANING OF NH-37 FROM RANGAGARA TO KALIABOR TINIALI (CH: 297.000 KM TO CH: 315.315 KM) IN NAGAON DISTRICT IN THE STATE OF ASSAM UNDER SARDP-NE, PHASE A ON EPC MODE

EPC CONTRACTOR:- SIMPLEX INFRASTRUCTURES LIMITED, 27, SHAKESPEARE SARANI, KOLKATA-17, INDIA

CONSULTANTS:- AECOM, 9th Floor, Infinity Tower C DLF Cyber City, DLF Phase II, Gurgaon-122002, Haryana, India

R. BENIWAL	S. YADAV	S.P. SINGH	S. RASTOGI
DRAWN	DESIGN	CHECKED BY	APPROVED BY

SCALE:- 1 : 1000

TITLE:- GENERAL ARRANGEMENT DRAWING FOR RCC BOX CULVERT AT CH. 306+040 (SCH. CH. 305+780)

DRAWING NO.:- AECOM-DELD15159-DD-DWG-BC-306+040-GAD-01 | REV. R0

AUTHORISED SIGNATORY | DATE | AUTHORISED SIGNATORY | DATE | AUTHORISED SIGNATORY | DATE

Bridge Engineer, Stup Consultants Pvt. Ltd., Nagaon-782001 (Assam)

Resident Engineer, STUP Consultant Pvt. Ltd., Nagaon-782001 (Assam)

Team Leader, STUP Consultants Pvt. Ltd., Nagaon-782001 (Assam)

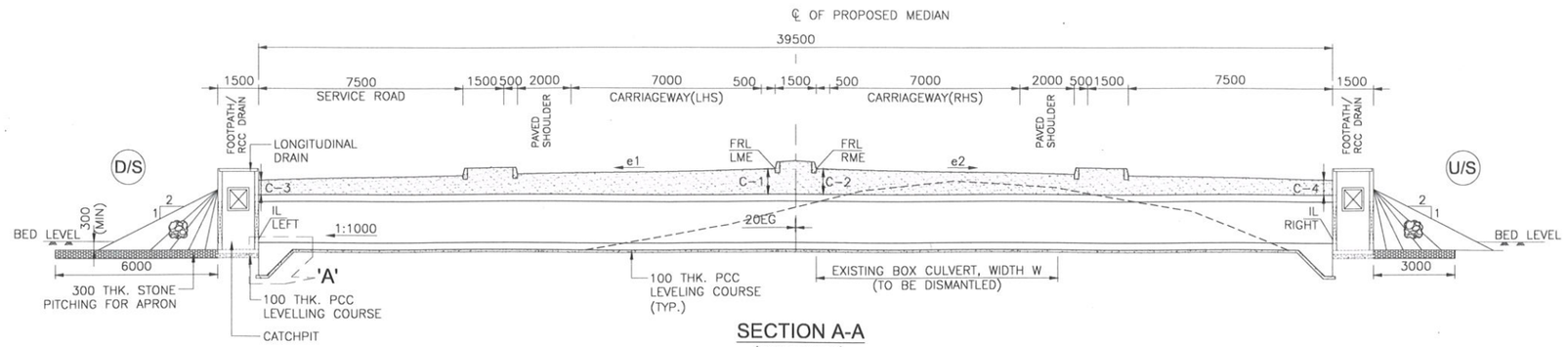

SECTION A-A

(SCALE 1:150)

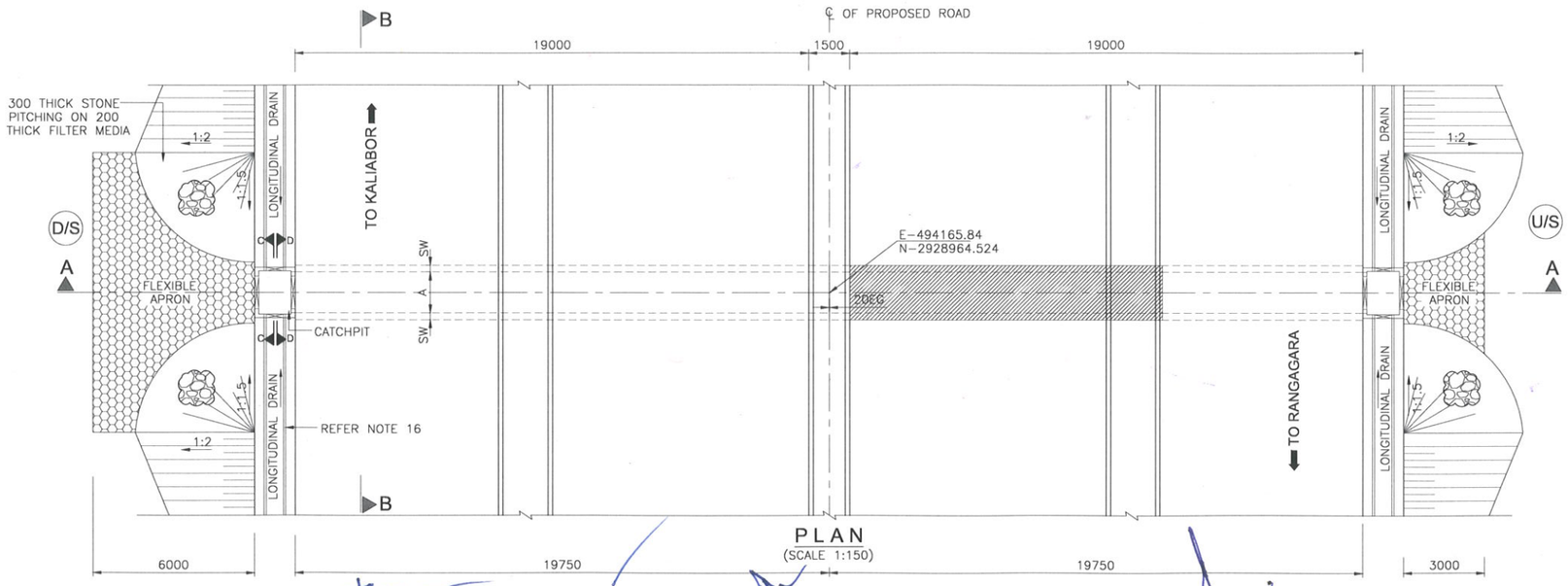

PLAN

(SCALE 1:150)

Bridge Engineer
Stup Consultants Pvt. Ltd.
Nagaon-782001(Assam)

Resident Engineer
STUP Consultant Pvt. Ltd.
Nagaon-782001 (Assam)

Team Leader
STUP Consultants Pvt. Ltd.
Nagaon-782001 (Assam)

TO RANGAGARA TO KALIABOR

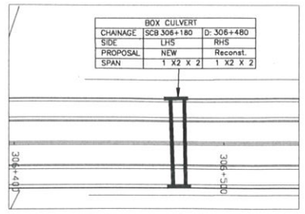

KEY PLAN

NOTES:-

1. ALL DIMENSIONS ARE IN MILLIMETERS, LEVELS ARE IN METERS UNLESS OTHERWISE MENTIONED.
2. NO DIMENSION SHALL BE MEASURED FROM THE DRAWINGS. ONLY WRITTEN DIMENSIONS SHALL BE FOLLOWED.
3. THE DRAWING SHALL BE READ IN CONJUNCTION WITH RELEVANT HIGHWAY PLAN AND PROFILE DRAWINGS. FRL, BED LEVEL, CAMBER/SUPERELEVATION AND LAYOUT SHALL ALSO BE VERIFIED AT SITE BEFORE EXECUTION. DISCEPANCIES SHALL BE BROUGHT TO THE NOTICE OF THE ENGINEER FOR REVISION IN DRAWINGS, IF ANY.
4. CHAINAGE OF THE STRUCTURE IS AT THE CENTER LINE OF THE PROPOSED STRUCTURE.
5. THE REINFORCEMENT SHALL BE HYSD BARS OF GRADE DESIGNATION Fe 500D CONFORMING TO IS 1786-2008 & IRC 112-2011.
6. CONCRETE SHALL BE DESIGN MIX WITH A MINIMUM 28 DAYS CHARACTERISTIC CUBE STRENGTH FOR DIFFERENT ELEMENTS AS FOLLOWS:
   a. RCC BOX STRUCTURE – M30
   b. PCC LEVELING COURSE – M15
   c. RCC FLY RETURN WALL – M30
   d. PCC CURTAIN WALL – M20
7. CLEAR COVER TO OUTER STEEL SHALL BE AS FOLLOWS:-
   a. SUPERSTRUCTURE 40MM
   b. VERTICAL FACE IN CONTACT WITH EARTH 75MM
   c. VERTICAL FACE NOT IN CONTACT WITH EARTH 40MM
   d. FOUNDATION 75MM
8. BACK FILLING BEHIND WALLS/ABUTMENT SHALL CONSISTS OF SELECTED EARTH CONFORMING TO APPENDIX 6 OF IRC:78-2014 HAVING PROPERTIES C=0, ø>=30°, γ=2.0t/cu.m.
9. FORMATION LEVEL SHOWN IS AT MEDIAN EDGE.
10. THE STRUCTURE HAS BEEN DESIGNED FOR LIVE LOAD COMBINATIONS CONFORMING TO IRC: 6-2014.
11. THE TOP OF BOTTOM RAFT SHALL BE KEPT MIN. 300MM BELOW LOWEST BED LEVEL. HOWEVER, CHANGE IN CLEAR HEIGHT OF RCC BOX SHALL NOT BE MORE THAN 500MM.
12. ALL SOLID WALLS RETAINING THE EARTH SHALL BE PROVIDED WITH WEEP HOLES (100MM DIA AND SLOPE 1V:20H) STARTING 150MM ABOVE THE GROUND LEVEL AND SPACED 1000MM C/C BOTH HORIZONTALLY AND VERTICALLY IN STAGGERED MANNER.
13. 600MM THICK FILTER MEDIA SHALL BE PROVIDED BEHIND SOLID ABUTMENT WALL & RETURN WALL.
14. CONDITION OF EXPOSURE IS MODERATE.
15. 20MM EXPANSION GAP FILLED WITH COMPRESSIBLE FIBER BOARD SHALL BE PROVIDED BETWEEN ADJACENT RCC BOXES.
16. THE SAFE BEARING CAPACITY AS PER DESIGN IS 6.39t/M². ANY VARIATION ON SITE SHOULD BE INFORMED TO THE DESIGN ENGINEER FOR NECESSARY ACTION.
17. THE LENGTH OF RIGID APRON SHALL BE AS PER ARTICLE 20 OF IRC:SP:13-2004.

LEGEND:-

FRL	–	FINISHED ROAD LEVEL
BL.	–	BED LEVEL
GL.	–	GROUND LEVEL
IL	–	INVERT LEVEL
EG	–	EXPANSION GAP
LOE	–	LEFT OUTER EDGE
ROE	–	RIGHT OUTER EDGE
LME	–	LEFT MEDIAN EDGE
RME	–	RIGHT MEDIAN EDGE
THK	–	THICKNESS
U/S	–	UPSTREAM
D/S	–	DOWNSTREAM

* ALL LEVEL SHALL BE VERIFIED WITH LATEST APPROVED PLAN & PROFILE DRAWINGS BEFORE EXECUTION OF WORK.

REFERENCE DRAWINGS.:-

1. REINFORCEMENT DETAILS FOR CULVERTS AECOM-DELD15159-DD-DWG-BC-01
2. MISCELLANEOUS DWGS. AECOM-DELD15159-MISC-01

SCHEDULE OF BOX CULVERT

S.No.	EXISTING KM.	DESIGN CH.	EXISTING SPAN (NOS. x C/C OF EXP.)	EXISTING CULVERT	EXISTING WIDTH,W (m)	SKEW	PROPOSAL	PROPOSED STRUCTURE	PROPOSED SPAN (NOS. x L)	CARRIAGEWAY	FRL		CAMBER/ SUPERELEVATION		BED LEVEL		INVERT LEVEL		TCS	FLOW OF DIRECTION	CUSHION (m)				RCC BOX DIMENSIONS (m)					BARREL LENGTH OF BOX (m)	REINFORCEMENT CATEGORY (REFER REINF. DRAWING)
											LME	RME	LEFT (e1)	RIGHT (e2)	LEFT	RIGHT	LEFT	RIGHT			LOE (C-3)	LME (C-1)	RME (C-2)	ROE (C-4)	A	B	TS	BS	SW		
1	306+180	306+480	1 x 2.0 x 2.0	BOX CULVERT	11.6	0	RECONSTRUCTION	BOX CULVERT	1 x 2.0 x2.0	MAIN CARRIAGEWAY	68.166	68.166	-2.500	-2.500	65.339	65.453	65.039	65.082	TYPE-7	R-L	0.628	0.856	0.855	0.608	2.000	2.000	0.250	0.300	0.250	39.500	2A
										SERVICE ROAD*	68.166	68.166	-2.500	-2.500							0.639	0.867	0.843	0.597							

Rev.	Date	Description on Revisions
R1	Nov.2017	P&P REVISED
R0	SEPT. 2017	FIRST SUBMISSION

Revisions

CLIENT:- NATIONAL HIGHWAYS & INFRASTRUCTURE (Development Coporation Ltd)

AUTHORITY'S ENGINEER: STUP Consultants P. Ltd & Ayoleeza Consultants P. Ltd. — AUTHORISED SIGNATORY — DATE

PROOF CHECKED CONSULTANT: CE TESTING Company Pvt. Ltd — AUTHORISED SIGNATORY — DATE

SAEFTY CONSULTANT:- Chaitanya Projects Consultancy Pvt. Ltd — AUTHORISED SIGNATORY — DATE

PROJECT: FOUR LANING OF NH-37 FROM RANGAGARA TO KALIABOR TINIALI (CH: 297.000 KM TO CH: 315.315 KM) IN NAGAON DISTRICT IN THE STATE OF ASSAM UNDER SARDP-NE, PHASE A ON EPC MODE

EPC CONTRACTOR:- SIMPLEX INFRASTRUCTURES LIMITED, 27, SHAKESPEARE SARANI, KOLKATA-17, INDIA

CONSULTANTS:- AECOM, 9th Floor, Infinity Tower C DLF Cyber City, DLF Phase II, Gurgaon-122002, Haryana, India

DRAWN	DESIGN	CHECKED BY	APPROVED BY
R. BENIWAL	S. YADAV	S.P. SINGH	S. RASTOGI

SCALE:- 1 : 1000

TITLE:- GENERAL ARRANGEMENT DRAWING FOR RCC BOX CULVERT AT CH. 306+480 (SCH. CH. 306+180)

DRAWING NO.:- AECOM-DELD15159-DD-DWG-BC-306+480-GAD-01 (SH 1 OF 2) — REV. R1

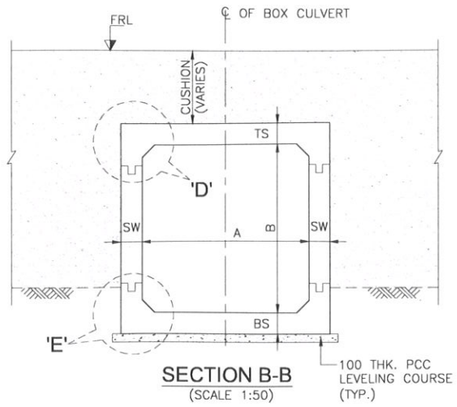

SECTION B-B
(SCALE 1:50)

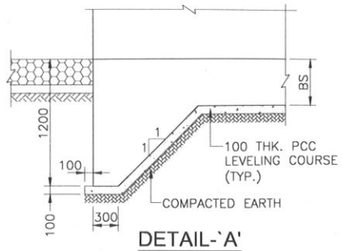

DETAIL-`A'
(SCALE 1:50)

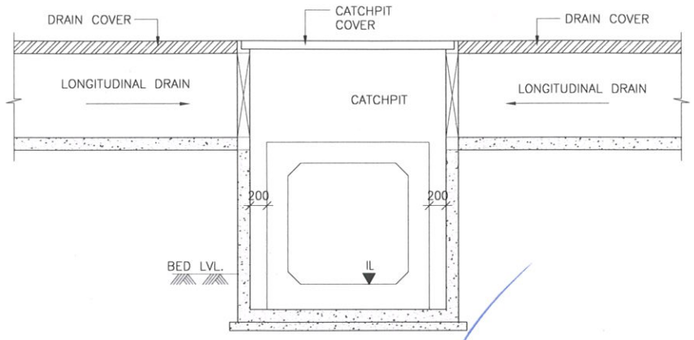

SECTION D-D
(SCALE 1:50)

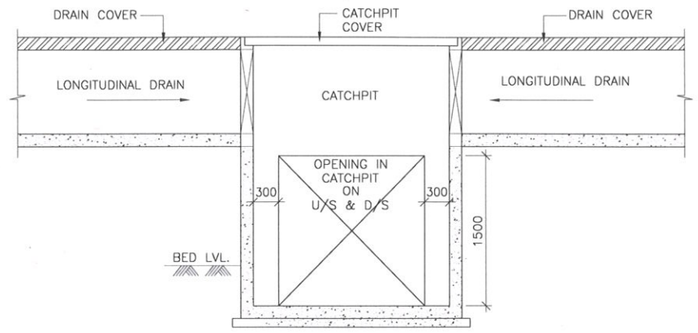

SECTION C-C
(SCALE 1:50)

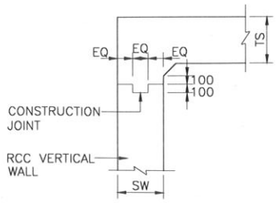

DETAIL-`D'
(SCALE 1:50)

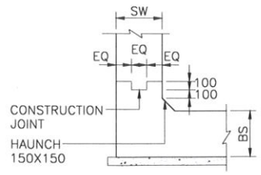

DETAIL-`E'
(SCALE 1:50)

Bridge Engineer
Stup Consultants Pvt. Ltd.
Nagaon-782001

Resident Engineer
STUP Consultant Pvt. Ltd
Nagaon-782001 (Assam)

Team Leader
STUP Consultants Pvt. Ltd
Nagaon-782001 (Assam)

Rev.	Date	Description on Revisions
R1	Nov.2017	P&P REVISED
R0	SEPT. 2017	FIRST SUBMISSION

Revisions

CLIENT:-	AUTHORITY'S ENGINEER:	PROOF CHECKED CONSULTANT:	SAEFTY CONSULTANT:-	PROJECT:	EPC CONTRACTOR:-	CONSULTANTS:-	SCALE:-	TITLE:-
NATIONAL HIGHWAYS & INFRASTRUCTURE (Development Coporation Ltd)	STUP Consultants P. Ltd & Ayoleeza Consultants P. Ltd.	CE TESTING Company Pvt. Ltd	Chaitanya Projects Consultancy Pvt. Ltd	FOUR LANING OF NH-37 FROM RANGAGARA TO KALIABOR TINIALI (CH: 297.000 KM TO CH: 315.315 KM) IN NAGAON DISTRICT IN THE STATE OF ASSAM UNDER SARDP-NE, PHASE A ON EPC MODE	SIMPLEX INFRASTRUCTURES LIMITED 27, SHAKESPEARE SARANI, KOLKATA-17, INDIA	AECOM 9th Floor, Infinity Tower C DLF Cyber City DLF Phase II, Gurgaon-122002, Haryana, India	1 : 1000	GENERAL ARRANGEMENT DRAWING FOR RCC BOX CULVERT AT CH. 306+480 (SCH. CH. 306+180)
	AUTHORISED SIGNATORY / DATE	AUTHORISED SIGNATORY / DATE	AUTHORISED SIGNATORY / DATE			DRAWN: R. BENIWAL; DESIGN: S. YADAV; CHECKED BY: S.P. SINGH; APPROVED BY: S. RASTOGI		DRAWING NO.:- AECOM-DELD15159-DD-DWG-BC-306+480-GAD-01 (SH 2 OF 2) REV. R1

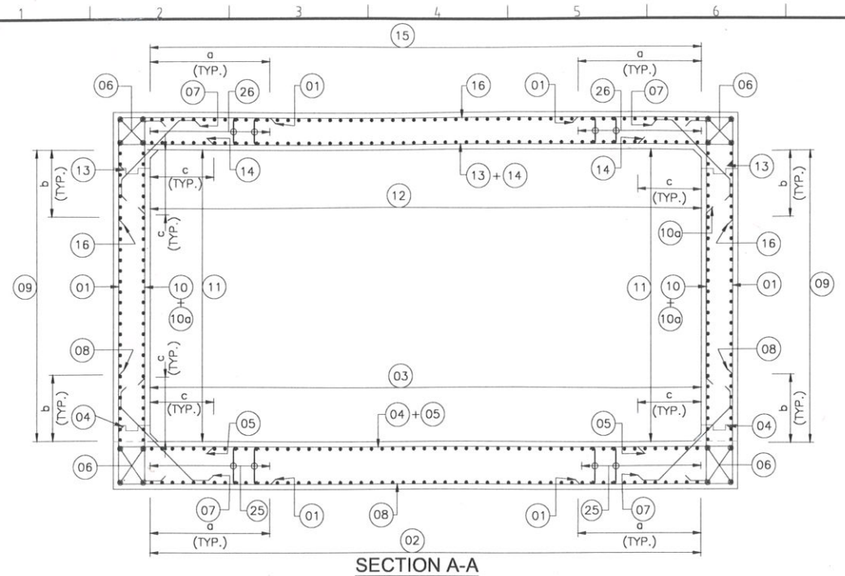

SECTION A-A
(SCALE 1:75)

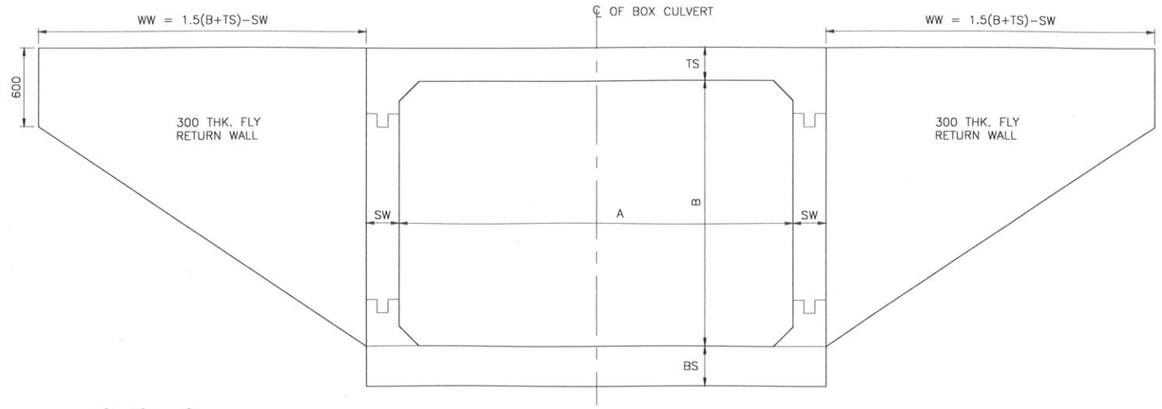

DIMENSION DETAILS

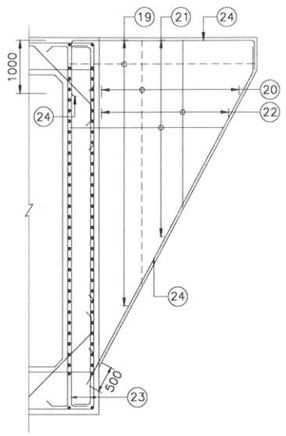

SECTION C-C
(SCALE 1:75)

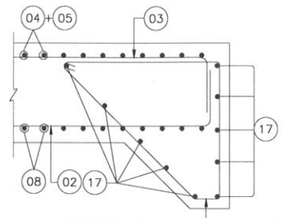

DETAIL 'A'
(SCALE 1:30)

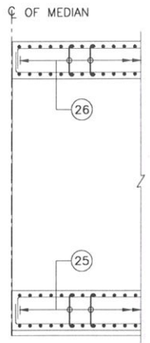

SECTION E-E
(SCALE 1:75)

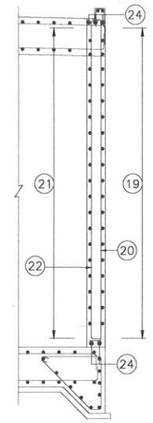

SECTION D-D
(SCALE 1:75)

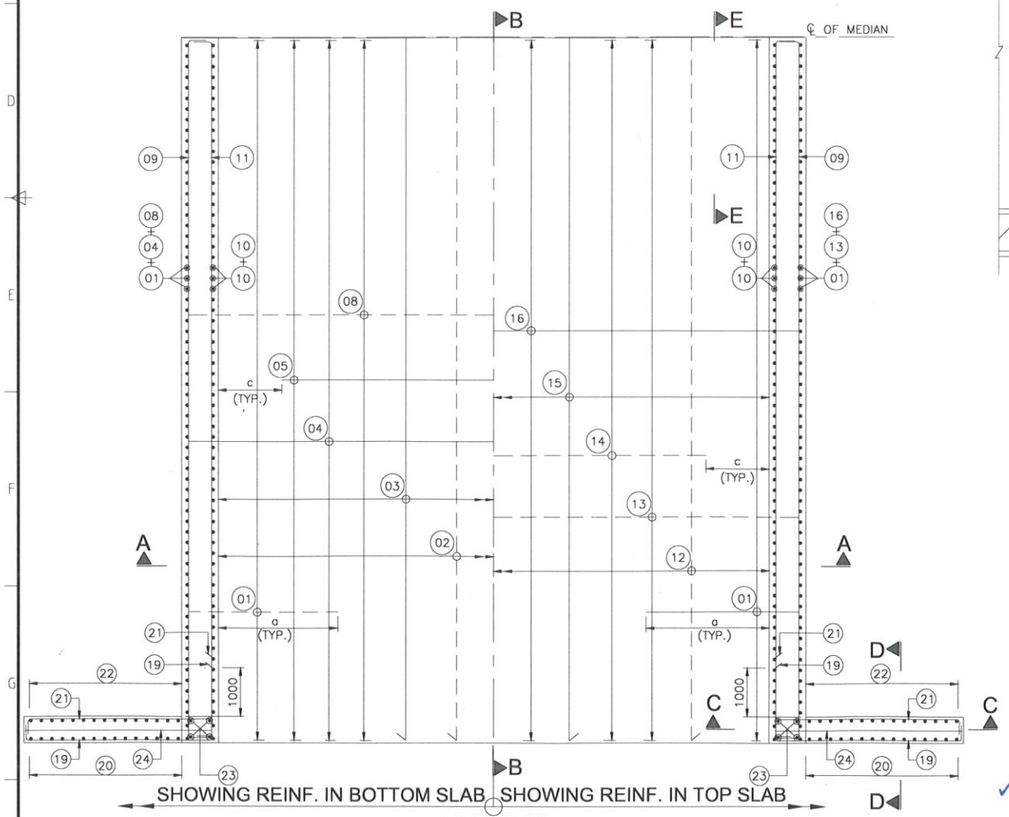

HALF PLAN
(SCALE 1:75)

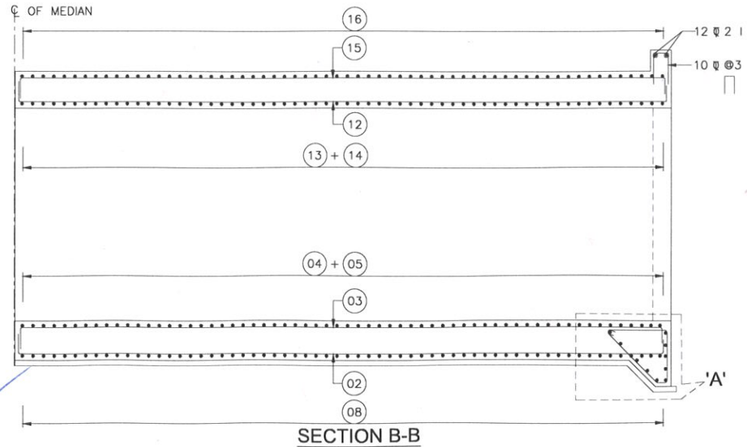

SECTION B-B
(SCALE 1:75)
(REINF. DETAILS OF LHS CARRIAGEWAY
SAME TO ADOPTED FOR RHS CARRIAGEWAY)

NOTES:-

1. ALL DIMENSIONS ARE IN MM UNLESS OTHERWISE MENTIONED. ONLY WRITTEN DIMENSIONS TO BE FOLLOWED. NO DIMENSION SHALL BE SCALED.
2. CONCRETE SHALL BE DESIGN MIX WITH A MINIMUM CHARACTERISTIC STRENGTH OF 30MPa FOR RCC BOX STRUCTURE.
3. CLEAR COVER TO OUTER MOST STEEL SHALL BE AS FOLLOWS:–
   EARTH FACE – 75mm
   OTHER FACE – 40mm
4. THE REINFORCING STEEL SHALL BE HYSD BARS (GRADE DESIGNATION Fe–500D) CONFORMING TO IS:1786–2008.
5. WATER STOPPER SHOULD BE PROVIDED AT CONSTRUCTION JOINT LOCATION.
6. THIS DRAWING SHALL BE READ IN CONJUNCTION WITH THE RELEVANT GENERAL ARRANGEMENT DRAWING.
7. LAP LENGTH SHALL NOT BE LESS THEN 55 TIMES DIAMETER OF BAR.

LEGEND:-

REINF. ON OUTER/BOTTOM FACE - - - - - - -
REINF. ON EARTH/TOP FACE ———————

TS – TOP SLAB THICKNESS
BS – BOTTOM SLAB THICKNESS
SW – SIDE WALL THICKNESS
WW – WIDTH OF WING WALL

Rev.	Date	Description on Revisions
R2	May 2018	Fly Return Wall Length Revised
R1	23-11-2017	DESIGN REVISED
R0	10-10-2017	FIRST SUBMISSION

Revisions

CLIENT:- NATIONAL HIGHWAYS & INFRASTRUCTURE (Development Coporation Ltd)

AUTHORITY'S ENGINEER: STUP Consultants P. Ltd & Ayoleeza Consultants P. Ltd.
AUTHORISED SIGNATORY | DATE

PROOF CHECK CONSULTANT:- CETEST
AUTHORISED SIGNATORY | DATE

SAEFTY CONSULTANT:- Chaitanya Projects Consultancy Pvt. Ltd
AUTHORISED SIGNATORY | DATE

PROJECT: FOUR LANING OF NH-37 FROM RANGAGARA TO KALIABOR TINIALI (CH: 297.000 KM TO CH: 315.315 KM) IN NAGAON DISTRICT IN THE STATE OF ASSAM UNDER SARDP-NE, PHASE A ON EPC MODE

EPC CONTRACTOR:- SIMPLEX INFRASTRUCTURES LIMITED, 27, SHAKESPEARE SARANI, KOLKATA-17, INDIA

CONSULTANTS:- AECOM, 9th Floor, Infinity Tower C DLF Cyber City DLF Phase II, Gurgaon-122002, Haryana, India
MANISH VERMA (DRAWN) | S. P. SINGH (DESIGN) | S. YADAV (CHECKED BY) | S. RASTOGI (APPROVED BY)

SCALE:- AS SHOWN

TITLE:- REINFORCEMENT DETAILS FOR RCC BOX CULVERTS

DRAWING NO.:- AECOM-DELD15159-DD-DWG-BC-REINF-01 (SH1 OF 2) REV. R0

Bridge Engineer
Stup Consultants Pvt. Ltd.
Nagaon

Resident Engineer
STUP Consultant Pvt. Ltd
Nagaon 782001 (Assam)

Team Leader
STUP Consultants Pvt. Ltd
Nagaon-782001 (Assam)

REINFORCEMENT SCHEDULE

CATEGORY	SIZE	CUSHION	REINFORCEMENT																									
			01	02	03	04	05	06	07	08	09	10	10a	11	12	13	14	15	16	17	18	19	20	21	22	23	24	25	26
2A	1x2.0x2.0	0–1	12 ϕ @250	10 ϕ @350	10 ϕ @350	12 ϕ @250	10 ϕ @250	12ϕ4x4NOS.	12 ϕ @250	12 ϕ @250	10 ϕ @350	12 ϕ @250	NOT IN USE	10 ϕ @350	10 ϕ @350	12 ϕ @250	10 ϕ @250	10 ϕ @350	12 ϕ @250	12ϕ–10NOS.	12 ϕ @250	10 ϕ @150	12 ϕ @250	12 ϕ @75	12 ϕ @250	12ϕ2x4NOS.	16ϕ2x4NOS.	–	–
2B	1x2.0x2.0	1–2	12 ϕ @230	10 ϕ @320	10 ϕ @320	12 ϕ @230	10 ϕ @230	12ϕ4x4NOS.	12 ϕ @230	12 ϕ @230	10 ϕ @320	12 ϕ @230	NOT IN USE	10 ϕ @320	10 ϕ @320	12 ϕ @230	–	10 ϕ @320	12 ϕ @230	12ϕ–10NOS.	12 ϕ @230	10 ϕ @150	12 ϕ @250	12 ϕ @75	12 ϕ @250	12ϕ2x4NOS.	16ϕ2x4NOS.	–	–
2C	1x2.0x2.0	2–3	12 ϕ @230	10 ϕ @320	10 ϕ @320	12 ϕ @230	10 ϕ @230	12ϕ4x4NOS.	12 ϕ @230	12 ϕ @230	10 ϕ @320	12 ϕ @230	10 ϕ @230	10 ϕ @320	10 ϕ @320	12 ϕ @230	10 ϕ @230	10 ϕ @320	12 ϕ @230	12ϕ–10NOS.	12 ϕ @230	10 ϕ @150	12 ϕ @250	12 ϕ @75	12 ϕ @250	12ϕ2x4NOS.	16ϕ2x4NOS.	–	–
6A	1x6.0x4.0	0–1	16 ϕ @120	12 ϕ @180	12 ϕ @180	12 ϕ @120	16 ϕ @120	12ϕ4x4NOS.	12 ϕ @120	12 ϕ @120	12 ϕ @180	12 ϕ @120	NOT IN USE	12 ϕ @180	12 ϕ @180	12 ϕ @120	12 ϕ @120	12 ϕ @180	12 ϕ @120	12ϕ–10NOS.	12 ϕ @120	10 ϕ @150	12 ϕ @250	12 ϕ @75	12 ϕ @250	12ϕ2x4NOS.	16ϕ2x4NOS.	–	–

BAR SHAPE SCHEDULE

CATEGORY	SIZE	CUSHION	BAR BEND LENGTH	REINFORCEMENT DIMENSION, M																									
				01	02	03	04	05	06	07	08	09	10	10a	11	12	13	14	15	16	17	18	19	20	21	22	23	24	25	26
2A	1x2.0x2.0	0–1	M	775	150	150	150	AS SHOWN	150	150	825	125	150	NOT IN USE	125	150	175	AS SHOWN	150	825	200	AS SHOWN	150	150	150	150	AS SHOWN	AS SHOWN	NOT IN USE	NOT IN USE
2B	1x2.0x2.0	1–2	M	775	150	150	150	AS SHOWN	150	150	825	125	150	NOT IN USE	125	150	175	NOT IN USE	150	825	200	AS SHOWN	150	150	150	150	AS SHOWN	AS SHOWN	NOT IN USE	NOT IN USE
2C	1x2.0x2.0	2–3	M	775	150	150	150	AS SHOWN	150	150	825	125	150	AS SHOWN	125	150	175	AS SHOWN	150	825	200	AS SHOWN	150	150	150	150	AS SHOWN	AS SHOWN	NOT IN USE	NOT IN USE
6A	1x6.0x4.0	0–1	M	2225	400	400	400	AS SHOWN	400	150	1675	375	400	NOT IN USE	375	400	425	AS SHOWN	400	1675	200	AS SHOWN	150	150	150	150	AS SHOWN	AS SHOWN	NOT IN USE	NOT IN USE

DIMENSION SCHEDULE

CATEGORY	SIZE	CUSHION	RCC BOX DIMENSIONS					WIDTH OF FLY RETURN WALL, WW(mm)	MAXIMUM BASE PRESSURE (t/m^2)
			A(mm)	B(mm)	TS(mm)	BS(mm)	SW(mm)		
2A	1x2.0x2.0	0–1	2000	2000	250	300	250	3125	6.39
2B	1x2.0x2.0	1–2	2000	2000	250	300	250	3125	8.39
2C	1x2.0x2.0	2–3	2000	2000	250	300	250	3125	10.39
6A	1x6.0x4.0	0–1	6000	4000	500	550	500	REFER GAD	7.89

a = 0.3A
b = 0.3B
c = 0.15A
WW = 1.5(B+TS)–SW

A = CLEAR SPAN
B = CLEAR HEIGHT

Bridge Engineer
Stup Consultants Pvt. Ltd.
Nagaon

Resident Engineer
STUP Consultant Pvt. Ltd
Nagaon-782001 (Assam)

Team Leader
STUP Consultants Pvt. Ltd.
Nagaon-782001 (Assam)

Rev.	Date	Description on Revisions
R2	May 2018	Fly Return Wall Length Revised
R1	23-11-2017	DESIGN REVISED
R0	10-10-2017	FIRST SUBMISSION

Revisions

CLIENT:- NATIONAL HIGHWAYS & INFRASTRUCTURE (Development Coporation Ltd)

AUTHORITY'S ENGINEER: STUP Consultants P. Ltd & Ayoleeza Consultants P. Ltd.

AUTHORISED SIGNATORY | DATE

PROOF CHECK CONSULTANT:- CTEST

AUTHORISED SIGNATORY | DATE

SAEFTY CONSULTANT:- Chaitanya Projects Consultancy Pvt. Ltd

AUTHORISED SIGNATORY | DATE

PROJECT: FOUR LANING OF NH-37 FROM RANGAGARA TO KALIABOR TINIALI (CH: 297.000 KM TO CH: 315.315 KM) IN NAGAON DISTRICT IN THE STATE OF ASSAM UNDER SARDP-NE, PHASE A ON EPC MODE

EPC CONTRACTOR:- SIMPLEX INFRASTRUCTURES LIMITED, 27, SHAKESPEARE SARANI, KOLKATA-17, INDIA

CONSULTANTS:- AECOM, 9th Floor, Infinity Tower C DLF Cyber City, DLF Phase II, Gurgaon-122002, Haryana, India

MANISH VERMA	S. P. SINGH	S. YADAV	S. RASTOGI
DRAWN	DESIGN	CHECKED BY	APPROVED BY

SCALE:- AS SHOWN

TITLE:- **REINFORCEMENT DETAILS FOR RCC BOX CULVERTS**

DRAWING NO.:- AECOM-DELD15159-DD-DWG-BC-REINF-01 (SH2 OF 2)

REV. R0

ANNEXURE 4

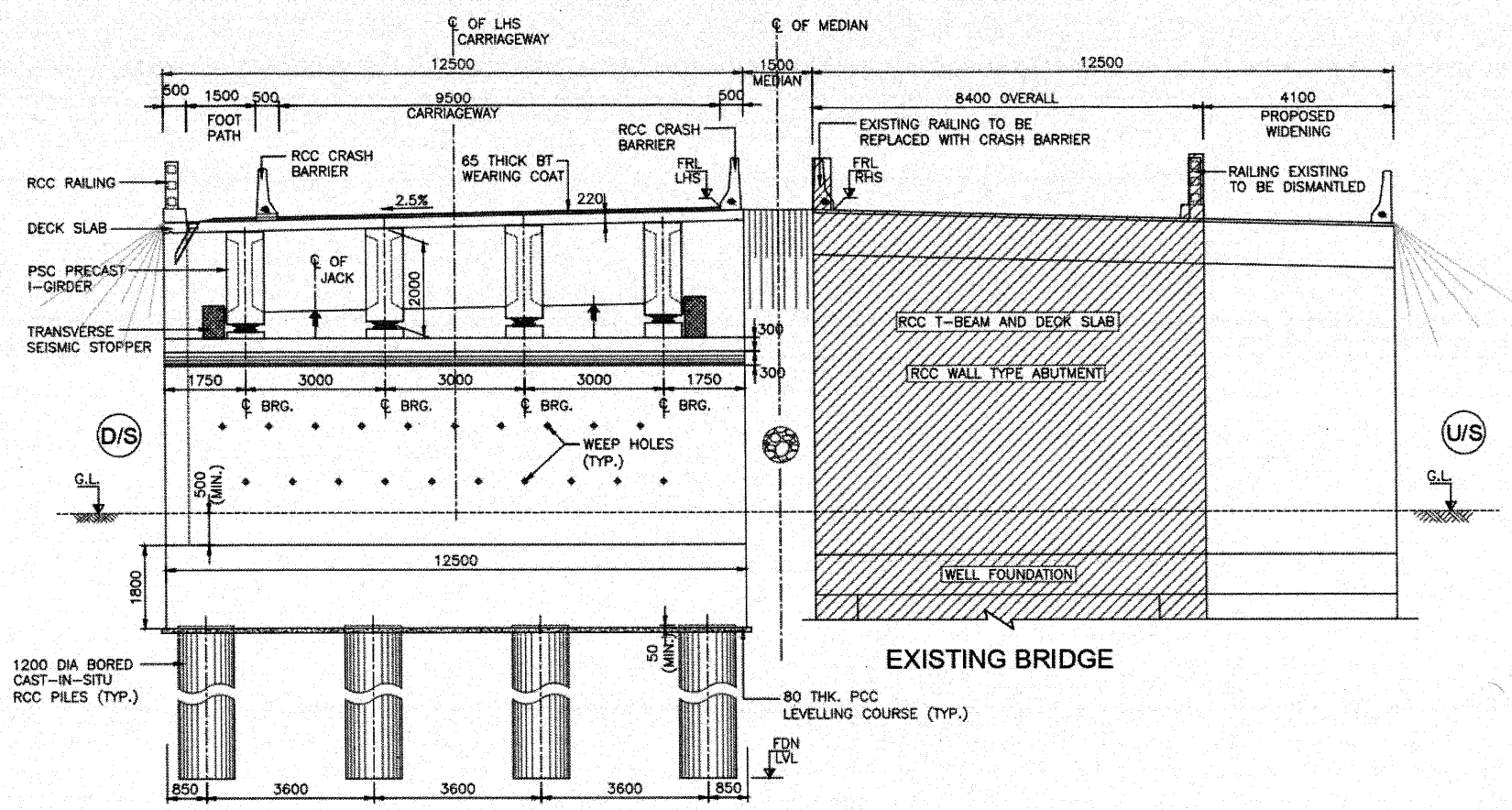

SECTION A-A

(SCALE : 1:100)

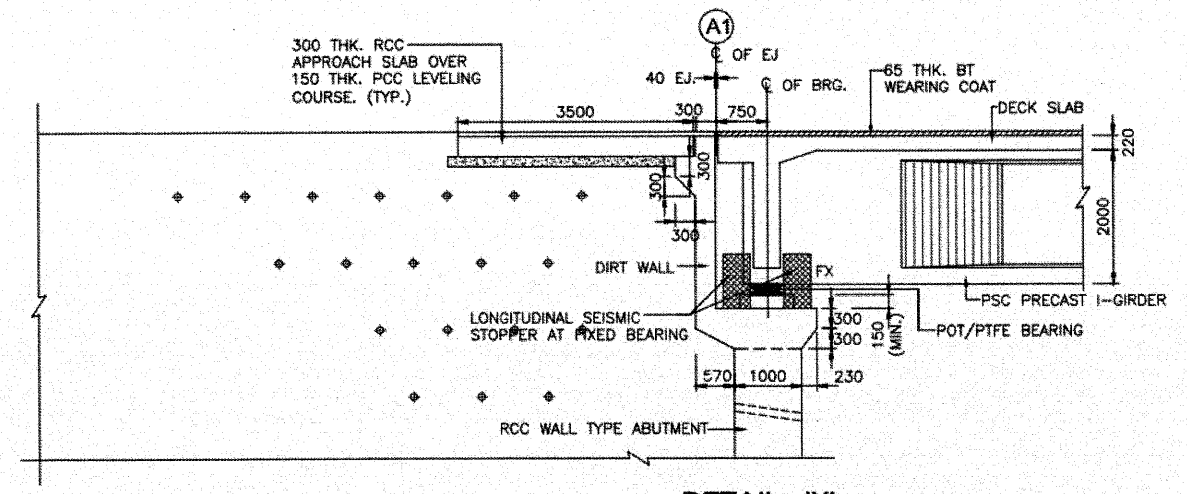

DETAIL - 'X'

(SCALE 1:75)

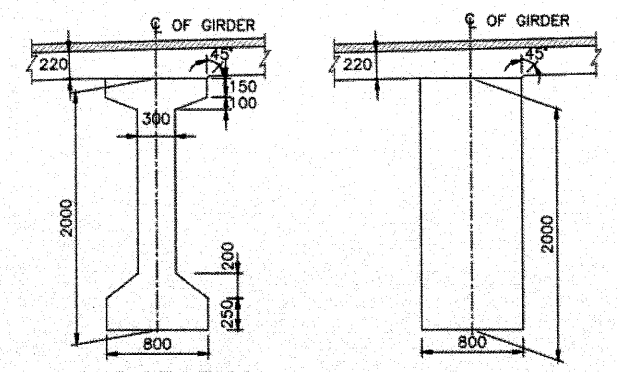

MID SECTION

SUPPORT SECTION

CROSS SECTION OF PSC PRECAST I-GIRDER

(SCALE 1:30)

Resident Engineer
STUP Consultants Pvt. Ltd.
Nagaon, Assam

Acting Team Leader
STUP Consultants Pvt. Ltd.
Nagaon, Assam

NOTES:-

1. ALL DIMENSIONS ARE IN MILLIMETERS, LEVELS ARE IN METERS UNLESS OTHERWISE MENTIONED.
2. NO DIMENSION SHALL BE MEASURED FROM THE DRAWINGS. ONLY WRITTEN DIMENSIONS SHALL BE FOLLOWED.
3. THE DRAWING SHALL BE READ IN CONJUNCTION WITH RELEVANT HIGHWAY PLAN AND PROFILE DRAWINGS. FRL, BED LEVEL, CAMBER/SUPERELEVATION AND LAYOUT SHALL ALSO BE VERIFIED AT SITE BEFORE EXECUTION. DISCEPANCIES SHALL BE BROUGHT TO THE NOTICE OF THE ENGINEER FOR REVISION IN DRAWINGS, IF ANY.
4. CHAINAGE OF THE STRUCTURE IS AT THE CENTER LINE OF THE PROPOSED STRUCTURE.
5. THE REINFORCEMENT SHALL BE HYSD BARS OF GRADE DESIGNATION Fe 500D CONFORMING TO IS 1786-2008.
6. CONCRETE SHALL BE DESIGN MIX WITH A MINIMUM 28 DAYS CHARACTERISTIC CUBE STRENGTH FOR DIFFERENT ELEMENTS AS FOLLOWS:
   - a. PSC PRECAST I-GIRDER — M45
   - b. RCC DECK SLAB & CROSS GIRDER — M40
   - c. RCC ABUT. & ABUT. CAP — M35
   - d. RCC PILE & PILE CAP — M35
   - e. RCC CRASH BARRIER — M40
   - f. RCC APPROACH SLAB — M30
   - g. PCC LEVELING COURSE — M15
   - h. RCC PEDESTALS — M40
   - i. RCC SEISMIC STOPPER — M35
7. CLEAR COVER TO OUTER STEEL SHALL BE AS FOLLOWS:-
   - a. SUPERSTRUCTURE — 40MM
   - b. RCC ABUT. STEM EARTH SIDE — 75MM
   - c. RCC ABUT. OUTER SIDE — 40MM
   - d. RCC ABUT. CAP — 40MM
   - e. SEISMIC STOPPERS — 40MM
   - f. PILE & PILE CAP — 75MM
   - g. CRASH BARRIER — 40MM
8. 65 THK. BITUMINOUS WEARING COAT SHALL BE ADOPTED IN CONFORMITY WITH SECTION 2702 OF MORTH SPECIFICATIONS.
9. DRAINAGE SPOUT 100MM DIA SPACED 5000MM C/C SHALL BE PROVIDED IN SUPERSTRUCTURE.
10. CONDITION OF EXPOSURE IS MODERATE.
11. THIS STRUCTURE LIES IN SEISMIC ZONE V.
12. FORMATION LEVEL SHOWN IS AT MEDIAN EDGE.
13. THE STRUCTURE HAS BE DESIGNED FOR LIVE LOAD COMBINATIONS CONFORMING TO IRC: 6-2014.
14. SINGLE STRIP SEAL TYPE EXPANSION JOINT SHALL BE PROVIDED AS PER MODIFIED INTERIM SPECIFICATION FOR EXPANSION JOINTS ISSUED VIDE "MORTH" CIRCULAR NO. RW/NH-34059/1/98-S&R DATED 30-11-2000 & 25-01-2001.
15. 600MM THICK FILTER MEDIA SHALL BE PROVIDED BEHIND SOLID ABUTMENT WALL & RETURN WALLS.
16. ALL SOLID WALLS RETAINING THE EARTH SHALL BE PROVIDED WITH WEEP HOLES (100MM DIA AND SLOPE 1V:20H) STARTING 150MM ABOVE THE GROUND LEVEL AND SPACED 1000MM C/C BOTH HORIZONTALLY AND VERTICALLY IN STAGGERED MANNER.
17. TAR PAPER BEARING SHALL BE PROVIDED BETWEEN APPROACH SLAB & BRACKET.
18. THE MAXIMUM PILE LOAD (TONNES) AS PER DESIGN IS:

NORMAL		SEISMIC	
A1	A2	A1	A2

WHICH IS LESS THAN PILE LOAD CAPACITY AT FOUNDING LEVEL AS PER GEOTECH REPORT.

19. PERMANENT STEEL LINER 6MM THK. SHALL BE PROVIDED UPTO MAX. SCOUR LEVEL.
20. FOR DETAILS OF FLOOR PROTECTION WORKS SUCH AS LAUNCHING APRON, REFER SEPARATE DRAWING.

REFERENCE DRAWINGS:

1.) SUPERSTRUCTURE:-
AECOM-DELD15159-DD-DWG-MNB-306+917-SUP-01 (SH1 TO 8)

2.) SUBSTRUCTURE:-
AECOM-DELD15159-DD-DWG-MNB-306+917-SUB-01 (SH1 TO 5)

3.) MISCELLANEOUS DWGS.
AECOM-DELD15159-MISC-01

4.) WIDENING METHODOLOGY
AECOM-DELD15159-DD-DWG-MNB-306+917-WID-01

5.) LAUNCHING APRON
AECOM-DELD15159-DD-DWG-MNB-306+917-APRON-01

LEGEND:-

FRL	–	FINISHED ROAD LEVEL
GL.	–	GROUND LEVEL
LVL.	–	LEVEL
FDN	–	FOUNDATION.
EJ	–	EXPANSION JOINT
LBL	–	LOWEST BED LEVEL
HFL	–	HIGHEST FLOOD LEVEL
H/W	–	HIGHWAY
MSL	–	MAXIMUM SCOUR LEVEL
BT	–	BITUMINOUS

Rev.	Date	Description on Revisions
		Revisions

CLIENT:- NATIONAL HIGHWAYS & INFRASTRUCTURE DEVELOPMENT CORPORATION LTD

AUTHORITY'S ENGINEER: STUP Consultants P. Ltd & Ayoleeza Consultants P. Ltd.

PROOF CHECK CONSULTANT:- CETEST

SAEFTY CONSULTANT:- Chaitanya Projects Consultancy Pvt. Ltd

AUTHORISED SIGNATORY | DATE | AUTHORISED SIGNATORY | DATE | AUTHORISED SIGNATORY | DATE

PROJECT: FOUR LANING OF NH-37 FROM RANGAGARA TO KALIABOR TINIALI (CH: 297.000 KM TO CH: 315.315 KM) IN NAGAON DISTRICT IN THE STATE OF ASSAM UNDER SARDP-NE, PHASE A ON EPC MODE

EPC CONTRACTOR: SIMPLEX INFRASTRUCTURES LIMITED, 27, SHAKESPEARE SARANI, KOLKATA, INDIA

CONSULTANTS:- AECOM, 9th Floor, Infinity Tower C DLF Cyber City, DLF Phase II, Gurgaon-122002, Haryana, India

DRAWN	DESIGN	CHECKED BY	APPROVED BY
H. BENERJEE	S. P. SINGH	S. PANDEY	S. MAJUMDER

SCALE:- AS SHOWN

TITLE:- GENERAL ARRANGEMENT DRAWING FOR MINOR BRIDGE AT CH. 307+192 (SCH-B CH. 306+917) (MISSA RIVER)

DRAWING NO.:- AECOM-DELD15159-DD-DWG-MNB-306+917-GAD-01 (SH 2 OF 2)

ANNEXURE 4

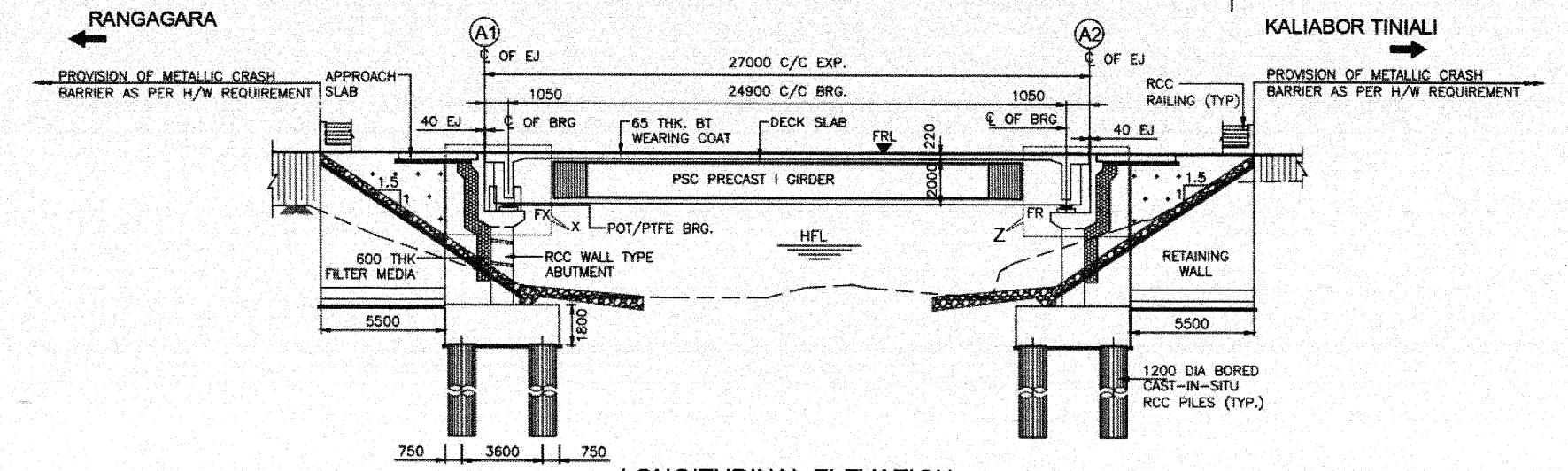

LONGITUDINAL ELEVATION

(SCALE 1:200)

FRL	LHS	68.000		68.000
	RHS	67.377		67.377
GL/BL		62.105	61.175	63.549
PILE CAP TOP LVL.		60.675		60.675
FOUNDING LVL.		---		---
DESIGN CHAINAGE		307+178.5	307+192	307+205.5

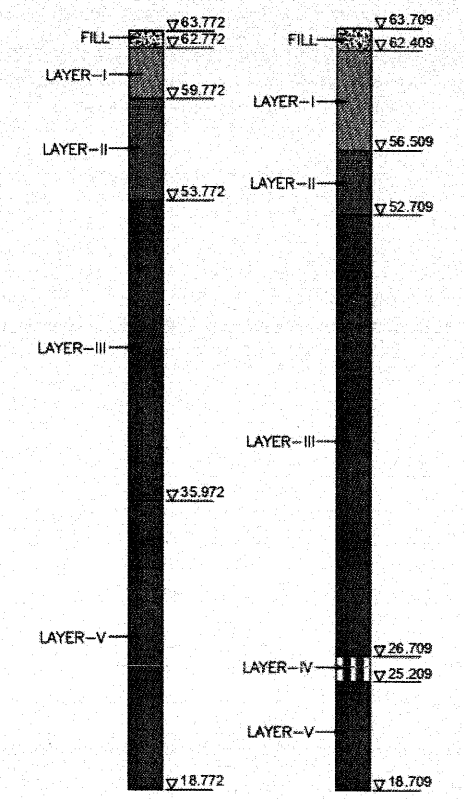

BORE HOLE DETAILS

Resident Engineer
STUP Consultants Pvt. Ltd.
Nagaon, Assam

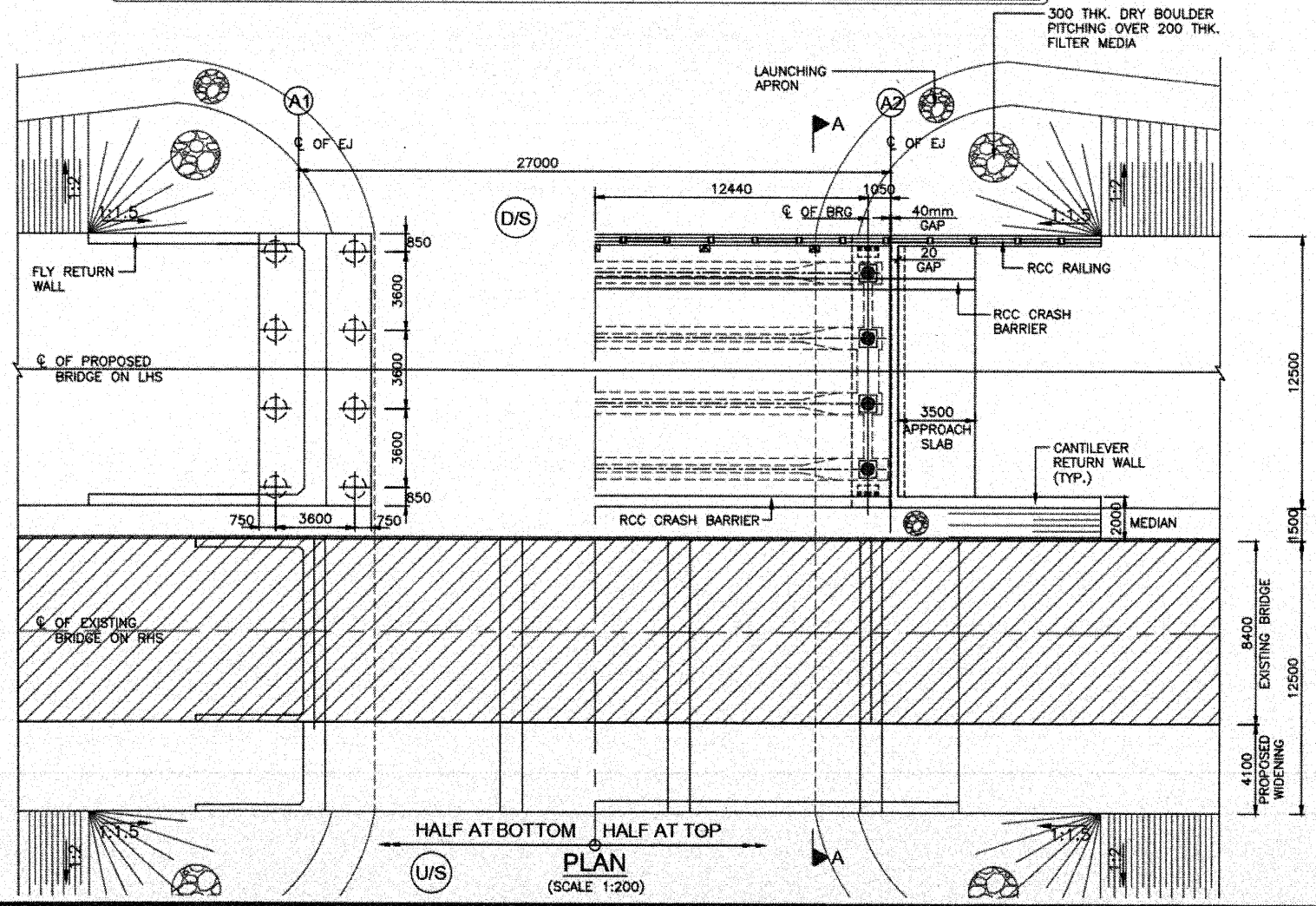

PLAN

(SCALE 1:200)

LEGEND FOR BORE HOLE

SYMBOL	DESCRIPTION
	FILL - (yellowish gray silty sand/silty clay with pebble, gravels & kankar)
	LAYER-I - yellowish grey soft to medium stiff clayey silt/silty clay
	LAYER-II - yellowish grey loose to medium dense clayey sandy silt/silty sand
	LAYER-III - yellowish grey/brownish yellow medium dense to very dense silty sand with kankars in higher depths
	LAYER-IV - yellowish grey hard silty clay mixed with traces of gravels
	LAYER-V - yellowish grey very dence silty sand mixed with traces of kankar, pebbles, gravels etc

HYDROLOGY DATA

DISCHARGE (Q)	118.329 cumecs
HFL	64.500 m
LBL	61.175 m
MSL FOR ABUTMENTS	58.786 m
MSL FOR PIERS	55.501 m
AVERAGE VELOCITY	1.277 m/sec.

Acting Team Leader
STUP Consultants Pvt. Ltd.
Nagaon, Assam

Rev.	Date	Description on Revisions
R0	23-08-2017	INTIAL SUBMISSION

CLIENT:- NATIONAL HIGHWAYS & INFRASTRUCTURE DEVELOPMENT CORPORATION LTD

AUTHORITY'S ENGINEER: STUP Consultants P. Ltd & Ayoleeza Consultants P. Ltd. — AUTHORISED SIGNATORY | DATE

PROOF CHECK CONSULTANT:- CETEST — AUTHORISED SIGNATORY | DATE

SAEFTY CONSULTANT:- Chaitanya Projects Consultancy Pvt. Ltd — AUTHORISED SIGNATORY | DATE

PROJECT: FOUR LANING OF NH-37 FROM RANGAGARA TO KALIABOR TINIALI (CH: 297.000 KM TO CH: 315.315 KM) IN NAGAON DISTRICT IN THE STATE OF ASSAM UNDER SARDP-NE, PHASE A ON EPC MODE

EPC CONTRACTOR:- SIMPLEX INFRASTRUCTURES LIMITED, 27, SHAKESPEARE SARANI, KOLKATA-71 [illegible]

CONSULTANTS:- AECOM, 9th Floor, Infinity Tower C DLF Cyber City, DLF Phase II, Gurgaon-122002, Haryana, India — DRAWN | DESIGN | CHECKED BY | APPROVED BY

SCALE:- AS SHOWN

TITLE:- GENERAL ARRANGEMENT DRAWING FOR MINOR BRIDGE AT CH. 307+192 (SCH-B CH. 306+917) (MISSA RIVER)

DRAWING NO.:- AECOM-DELD15159-DD-DWG-MNB-306+917-GAD-01 (SH 1 OF 2)

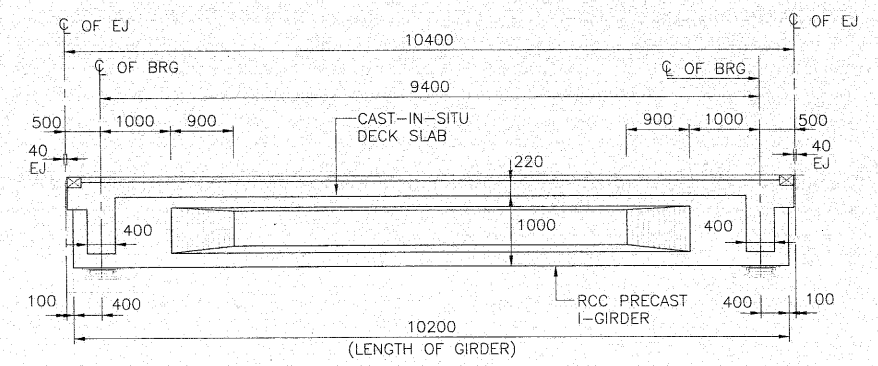

ELEVATION A-A
SCALE 1:75

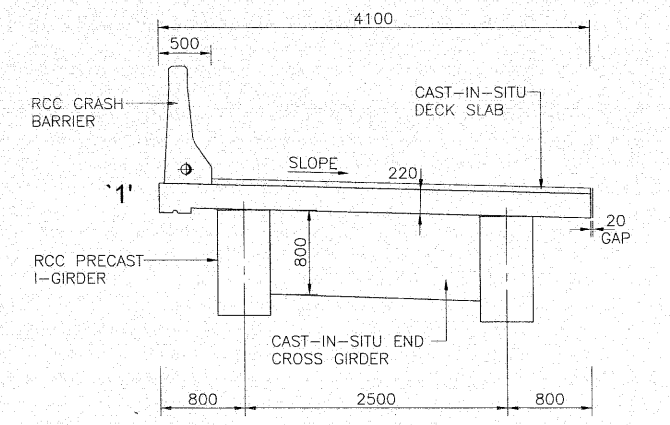

SECTION B-B
(SCALE 1:50)

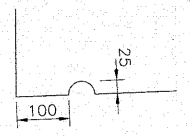

DETAIL-`1'
SHOWING DRIP COURSE
(SCALE 1:10)

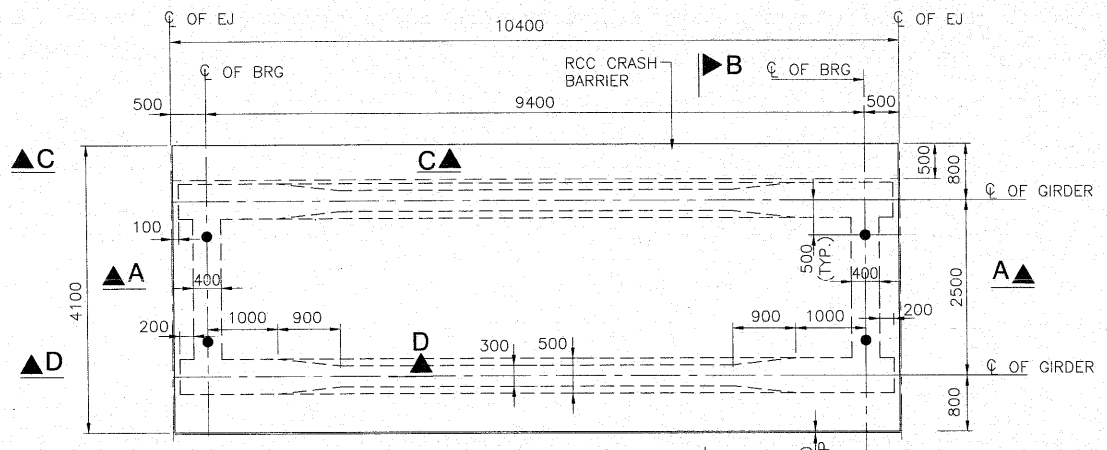

SECTIONAL PLAN
SCALE 1:75

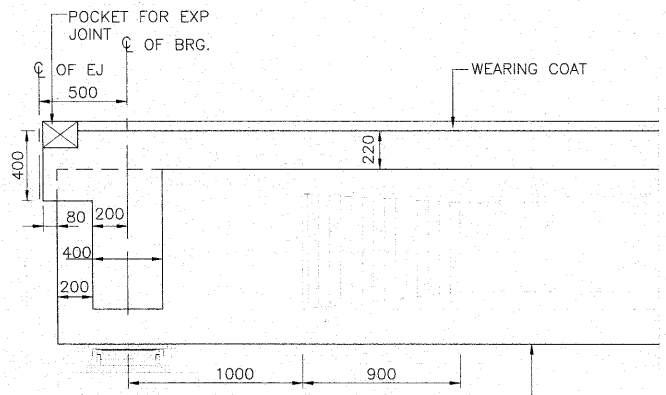

SECTION D-D
(SCALE 1:30)

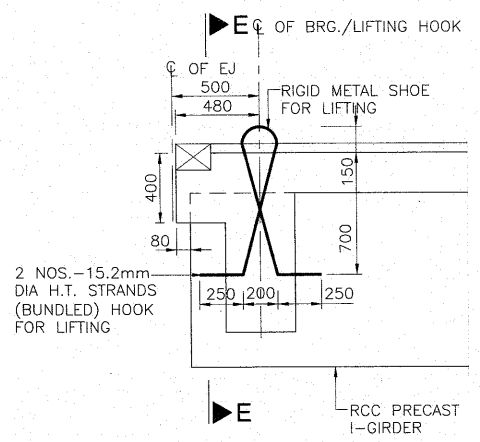

TYPICAL DETAIL OF LIFTING OF GIRDER AT EACH END OF GIRDER
(SCALE 1:30)

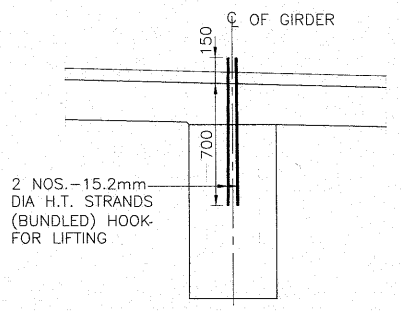

SECTION E-E
(SCALE 1:30)

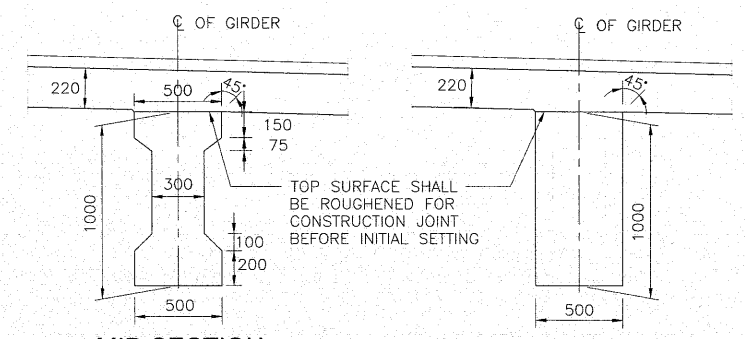

MID SECTION
SUPPORT SECTION
CROSS SECTION OF RCC PRECAST I-GIRDER
(SCALE 1:30)

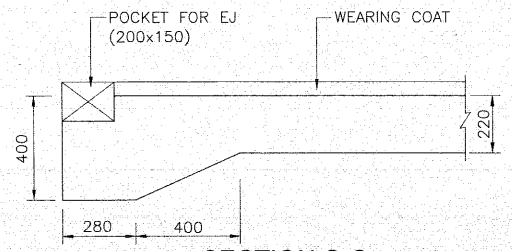

SECTION C-C
(SCALE 1:20)

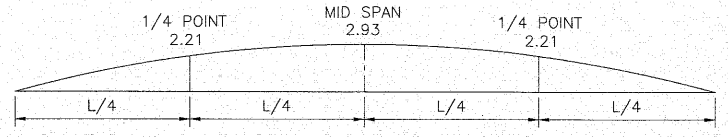

PRE-CAMBER IN GIRDER
SCALE 1:100

NOTES:-

1. ALL DIMENSIONS ARE IN MILLIMETERS, LEVELS ARE IN METERS UNLESS OTHERWISE MENTIONED.
2. NO DIMENSIONS SHALL BE MEASURED FROM THE DRAWINGS. ONLY WRITTEN DIMENSIONS SHALL BE FOLLOWED.
3. CONCRETE SHALL BE DESIGN MIX WITH A MINIMUM 28 DAYS CHARACTERISTIC CUBE STRENGTH FOR DIFFERENT ELEMENTS AS FOLLOWS:
   a. RCC PRECAST I-GIRDER – M35
   b. RCC CAST-IN-SITU DECK SLAB – M35
   c. RCC CAST-IN-SITU END CROSS GIRDER – M35
4. SUITABLE HOLES SHALL BE LEFT IN PRECAST GIRDER FOR SUPPORTING THE DECK SLAB SHUTTERING.
5. THE REINFORCEMENT OF CRASH BARRIER SHALL BE PROPERLY ANCHORED IN THE DECK SLAB BEFORE CASTING THE DECK SLAB.
6. BEAMS SHALL BE KEPT UPRIGHT AT ALL TIMES AND TO BE CLEARLY MARKED INDICATING SPAN LOCATION & RESPECTIVE ENDS BEFORE REMOVAL FROM CASTING BED.
7. TOP SURFACE OF PRECAST BEAM & VERTICAL EDGES OF END TO BE LEFT ROUGHENED FOR EFFECTIVE BONDING.
8. THE REINFORCING STEEL SHALL BE HYSD BARS (GRADE DESIGNATION Fe-500D) CONFORMING TO IS:1786-2008.
9. LAPPING OF REINFORCEMENT SHALL BE AVOIDED AS FAR AS POSSIBLE. IN CASE LAPPING OF BARS BECOME UNAVOIDABLE, LAP LENGTH SHALL BE PROVIDED AS PER CLAUSE 15.2.5 IRC:112-2011:-
   * $\alpha_1 \times 36\phi$ (GRADE M35) FAVOURABLE CONDITION
   * $\alpha_1 \times 1.43 \times 36\phi$ (GRADE M35) UNFAVOURABLE CONDITION

PERCENTAGE OF LAPPED BARS RELATIVE TO TOTAL CROSS-SECTIONAL AREA	<25%	33%	50%	>50%
α_1	1	1.15	1.4	1.5

10. ANCHORAGE LENGTH SHALL BE AS PER CLAUSE 15.2.3 & 15.2.4, IRC:112-2011:-
   * 36ϕ (GRADE M35) FAVORABLE CONDITION
   * $1.43 \times 36\phi$ (GRADE M35) UNFAVORABLE CONDITION

Resident Engineer
STUP Consultants Pvt. Ltd.
Nagaon, Assam

CONSTRUCTION & SEQUENCE OF GIRDERS

1. AT '0'TH DAY, GIRDER SHALL BE CASTED ON CASTING BED.
2. AFTER 28 DAYS WHEN CONCRETE WILL ATTEND A STRENGTH OF 35MPA, GIRDERS SHALL THEN BE PLACED ON TEMPORARY SUPPORTS ON PIER CAP/ABUTMENT CAP.
3. PERMANENT BEARINGS SHALL BE INSTALLED ON PEDESTALS.
4. STEEL WEDGE SHALL BE FIXED UNDER GIRDER AT BEARING LOCATION AS PER RELEVANT WEDGE DETAILS.
5. TEMPORARY SUPPORT SHALL BE REMOVED SO THAT GIRDER CAN BE PLACED OVER PERMANENT BEARINGS.
6. DECK SLAB SHALL BE CAST AFTER 28 DAYS OF CASTING OF GIRDER.
7. CRASH BARRIER/RAILING SHALL BE ERECTED/CAST 3 DAYS AFTER CASTING THE DECK SLAB. THE DECK CANTILEVER SHUTTERING MAY BE OPENED AFTER THE DECK SLAB ATTAINS A STRENGTH OF 25MPa.
8. WEARING COAT MAY BE LAID AFTER REMOVAL OF SHUTTERING OF DECK 14 DAYS AFTER CASTING DECK SLAB OR WHEN DECK ATTAINS CONCRETE CUBE STRENGTH OF 35MPa.

REFERENCE DRAWINGS

1.) GENERAL ARRANGEMENT DRAWING:-
AECOM-DELD15159-DD-DWG-MNB-306+917-GAD-01

2.) SUBSTRUCTURE:-
AECOM-DELD15159-DD-DWG-MNB-306+917-SUB-01

LEGEND:-

FRL – FINISHED ROAD LEVEL
CC – CEMENT CONCRETE
LHS – LEFT HAND SIDE
RHS – RIGHT HAND SIDE
EJ – EXPANSION JOINT
CAST-IN-SITU PORTION
PRECAST PORTION
BOTTOM FACE
TOP FACE

Acting Team Leader
STUP Consultants Pvt. Ltd.
Nagaon, Assam

AECOM India Private Limited
Gurgaon

Rev.	Date	Description on Revisions
R0	13-12-2022	FIRST SUBMISSION

Revisions

CLIENT:- NATIONAL HIGHWAYS & INFRASTRUCTURE (Development Coporation Ltd)

AUTHORITY'S ENGINEER: STUP Consultants P. Ltd & Ayoleeza Consultants P. Ltd.

QUALITY CHECK CONSULTANT:- CETEST Engineering Consultants, CE TESTING COMPANY PVT. LTD.

SAEFTY CONSULTANT:- Chaitanya Projects Consultancy Pvt. Ltd

PROJECT: FOUR LANING OF NH-37 FROM RANGAGARA TO KALIABOR TINIALI (CH: 297.000 KM TO CH: 315.315 KM) IN NAGAON DISTRICT IN THE STATE OF ASSAM UNDER SARDP-NE, PHASE A ON EPC MODE

EPC CONTRACTOR: SIMPLEX INFRASTRUCTURES LIMITED, 27, SHAKSPEARE SARANI, KOLKATA-17, INDIA

CONSULTANTS:- AECOM, 9th Floor, Infinity Tower C DLF Cyber City, DLF Phase II, Gurgaon-122002, Haryana, India

MANISH VERMA	PRAMOD KIRAR	S P SINGH	S RASTOGI
DRAWN	DESIGN	CHECKED BY	APPROVED BY

SCALE:- AS SHOWN

TITLE:- DIMENSION & REINFORCEMENT DETAILS OF RCC GIRDER OF SPAN 10.4M FOR MINOR BRIDGE AT CH. 307+192 (SCH-B CH. 306+917) (DIMENSION DETAILS)

DRAWING NO.:- AECOM-DELD15159-DD-DWG-MNB-306+917-SUP-02 (SH 1 OF 4) REV. R0

AUTHORISED SIGNATORY | DATE | AUTHORISED SIGNATORY | DATE | AUTHORISED SIGNATORY | DATE

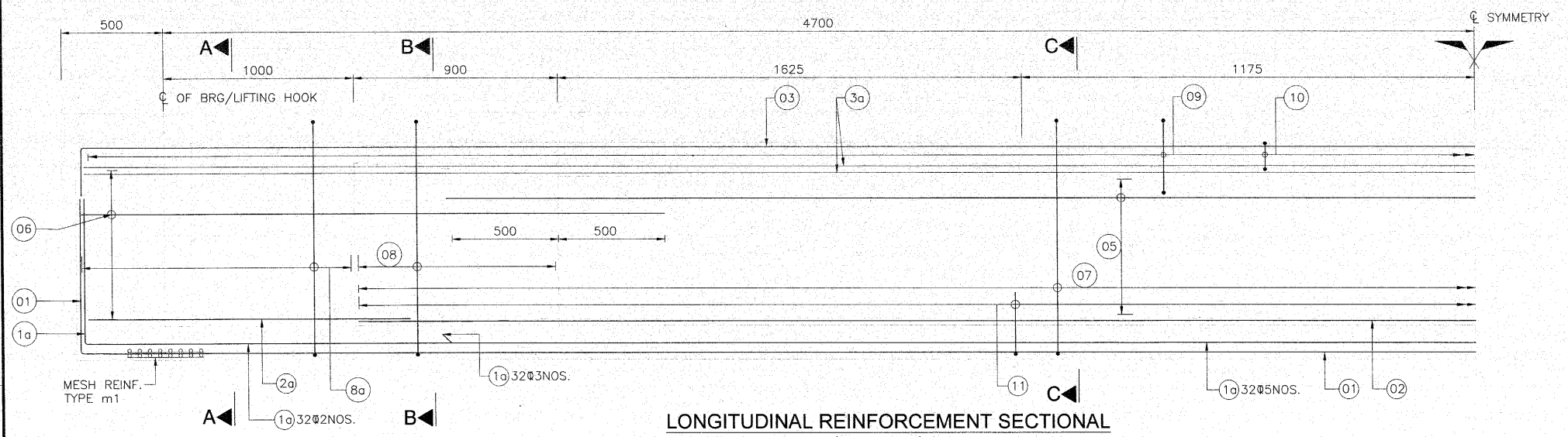

LONGITUDINAL REINFORCEMENT SECTIONAL
(SCALE 1 :30)

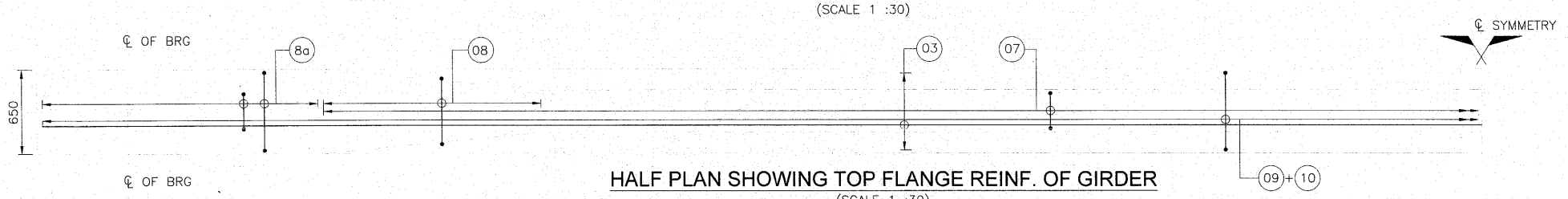

HALF PLAN SHOWING TOP FLANGE REINF. OF GIRDER
(SCALE 1 :30)

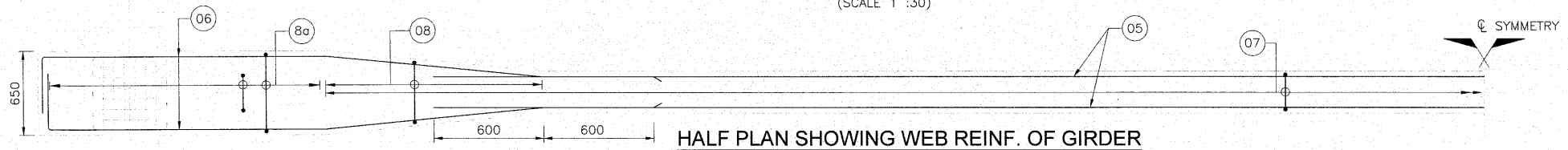

HALF PLAN SHOWING WEB REINF. OF GIRDER
(SCALE 1 :30)

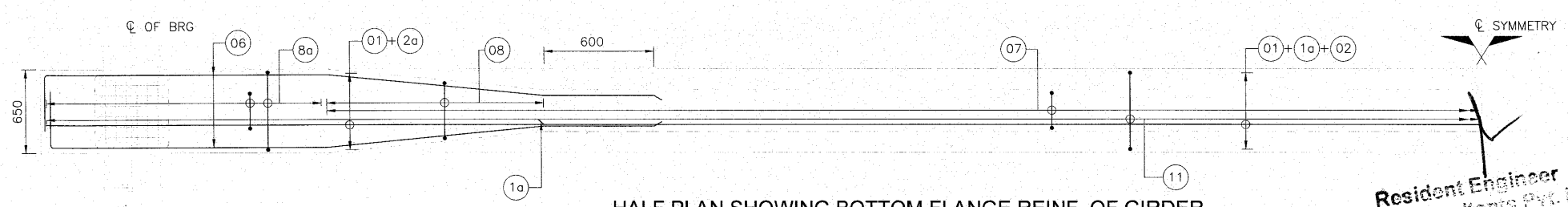

HALF PLAN SHOWING BOTTOM FLANGE REINF. OF GIRDER
(SCALE 1 :30)

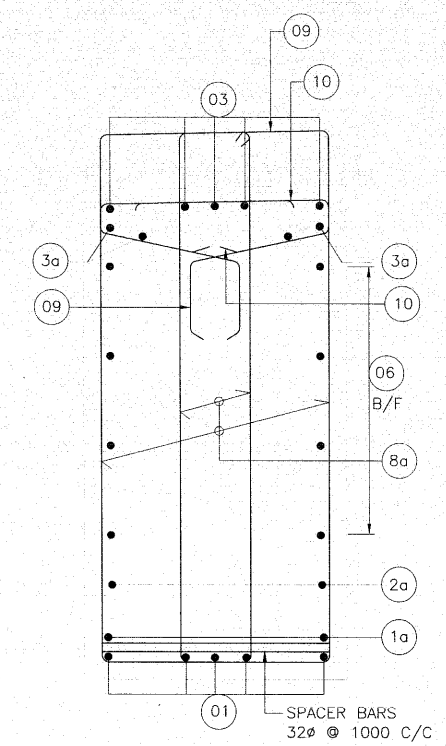

SECTION A-A
(SCALE 1:15)

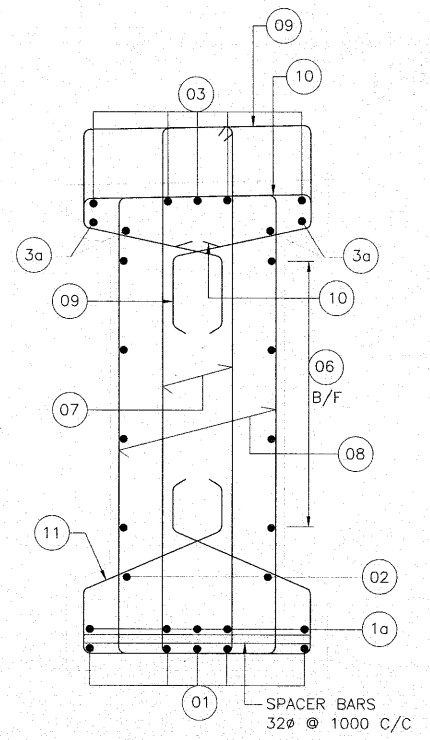

SECTION B-B
(SCALE 1:15)

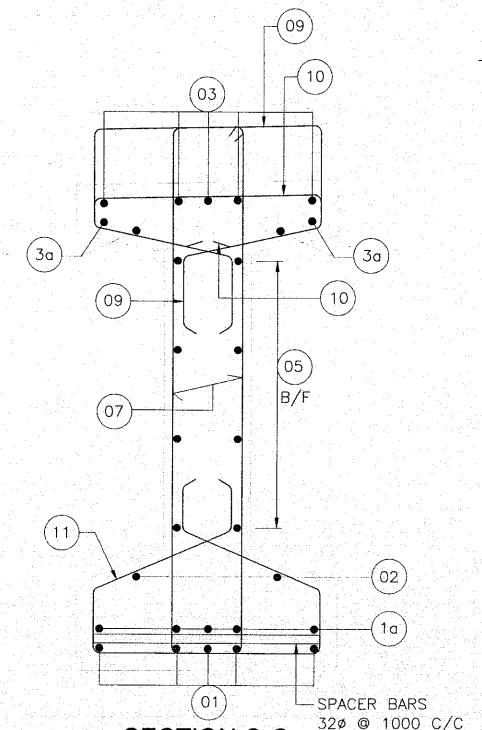

SECTION C-C
(SCALE 1:15)

SCHEDULE OF REINFORCEMENT

BAR MARK	SHAPE	DIA	SPACING/ NOS.	REMARKS
01	900	32 Φ	5 Nos.	
1a	900	32 Φ	5 Nos.	
02		10 Φ	1X2 Nos.	
2a	500	10 Φ	1X2 Nos.	
03	900	10 Φ	5 Nos.	
3a		10 Φ	4 Nos.	
04	NOT IN USE			
05		10 Φ	2X4 Nos.	
06	450	10 Φ	2X4 Nos.	
07	2 LEGGED	12 Φ	120c/c	
08	2 LEGGED VARIES	12 Φ	120c/c	
8a	4 LEGGED	12 Φ	120c/c	
09	50	10 Φ	120c/c	
10		10 Φ	120c/c	
11	50	10 Φ	120c/c	

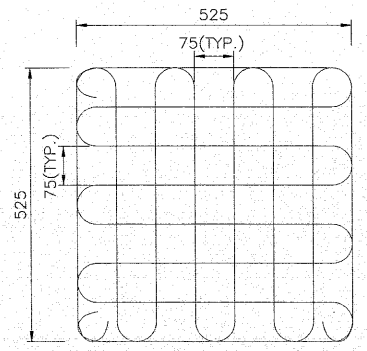

8 Φ MESH TYPE-m1
(IN TWO LAYERS ABOVE BEARING)
(SCALE: 1:10)

NOTES:-

1. ALL DIMENSIONS ARE IN MILLIMETERS, LEVELS ARE IN METERS UNLESS OTHERWISE MENTIONED.
2. NO DIMENSIONS SHALL BE MEASURED FROM THE DRAWINGS. ONLY WRITTEN DIMENSIONS SHALL BE FOLLOWED.
3. MESH TYPE 'm1' SHALL BE PROVIDED IN LONGITUDINAL GIRDER ABOVE BEARING LOCATION IN TWO LAYERS, AT 20mm AND AT 80mm FROM OUTER FACE OF GIRDER.
4. SPLICES OF REINF. SHALL BE DONE BY LAPS OF BARS WITH STRAIGHT ENDS OR WITH END HOOKS OR WELDING OR MECHANICAL DEVICES AS PER CLAUSE NO 15.2.5 OF IRC:112–2011
5. THE REINFORCEMENT OF CRASH BARRIER SHALL BE PROPERLY ANCHORED IN THE DECK SLAB BEFORE CASTING THE DECK SLAB.
6. MESH REINF. SHALL BE MS BARS (GRADE DESIGNATION S250) CONFORMING TO IS:432 PART–1 MILD STEEL.

Resident Engineer
STUP Consultants Pvt. Ltd.
Nagaon, Assam

Acting Team Leader
STUP Consultants Pvt. Ltd.
Nagaon, Assam

AECOM India Private Limited
Gurgaon

Rev.	Date	Description on Revisions
R0	13-12-2022	FIRST SUBMISSION

Revisions

CLIENT:- NATIONAL HIGHWAYS & INFRASTRUCTURE (Development Coporation Ltd)

AUTHORITY'S ENGINEER: STUP Consultants P. Ltd & Ayoleeza Consultants P. Ltd. — AUTHORISED SIGNATORY | DATE

CONSULTANT:- CETEST — AUTHORISED SIGNATORY | DATE

SAEFTY CONSULTANT:- Chaitanya Projects Consultancy Pvt. Ltd — AUTHORISED SIGNATORY | DATE

PROJECT: FOUR LANING OF NH-37 FROM RANGAGARA TO KALIABOR TINIALI (CH: 297.000 KM TO CH: 315.315 KM) IN NAGAON DISTRICT IN THE STATE OF ASSAM UNDER SARDP-NE, PHASE A ON EPC MODE

EPC CONTRACTOR: SIMPLEX INFRASTRUCTURES LIMITED, 27, SHAKESPEARE SARANI, KOLKATA-17, INDIA

CONSULTANTS:- AECOM, 9th Floor, Infinity Tower C DLF Cyber City, DLF Phase II, Gurgaon-122002, Haryana, India

DRAWN	DESIGN	CHECKED BY	APPROVED BY
MANISH VERMA	PRAMOD KIRAR	S. P. SINGH	S. RASTOGI

SCALE:- AS SHOWN

TITLE:- DIMENSION & REINFORCEMENT DETAILS OF RCC GIRDER OF SPAN 10.4M FOR MINOR BRIDGE AT CH. 307+192 (SCH-B CH. 306+917) (LONGITUDINAL GIRDER MIN. REINF.)

DRAWING NO.:- AECOM-DELD15159-DD-DWG-MNB-306+917-SUP-02 (SH 2 OF 4) — REV. R0

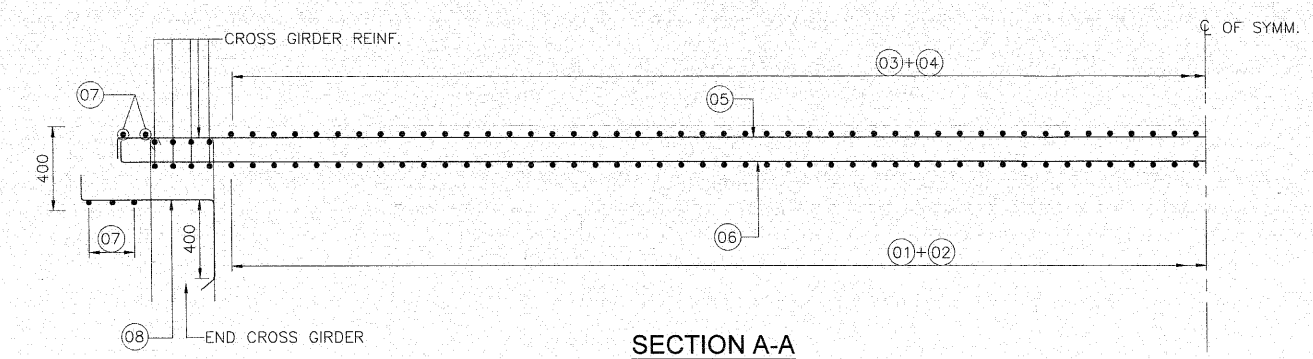

SECTION A-A
(SCALE 1:25)

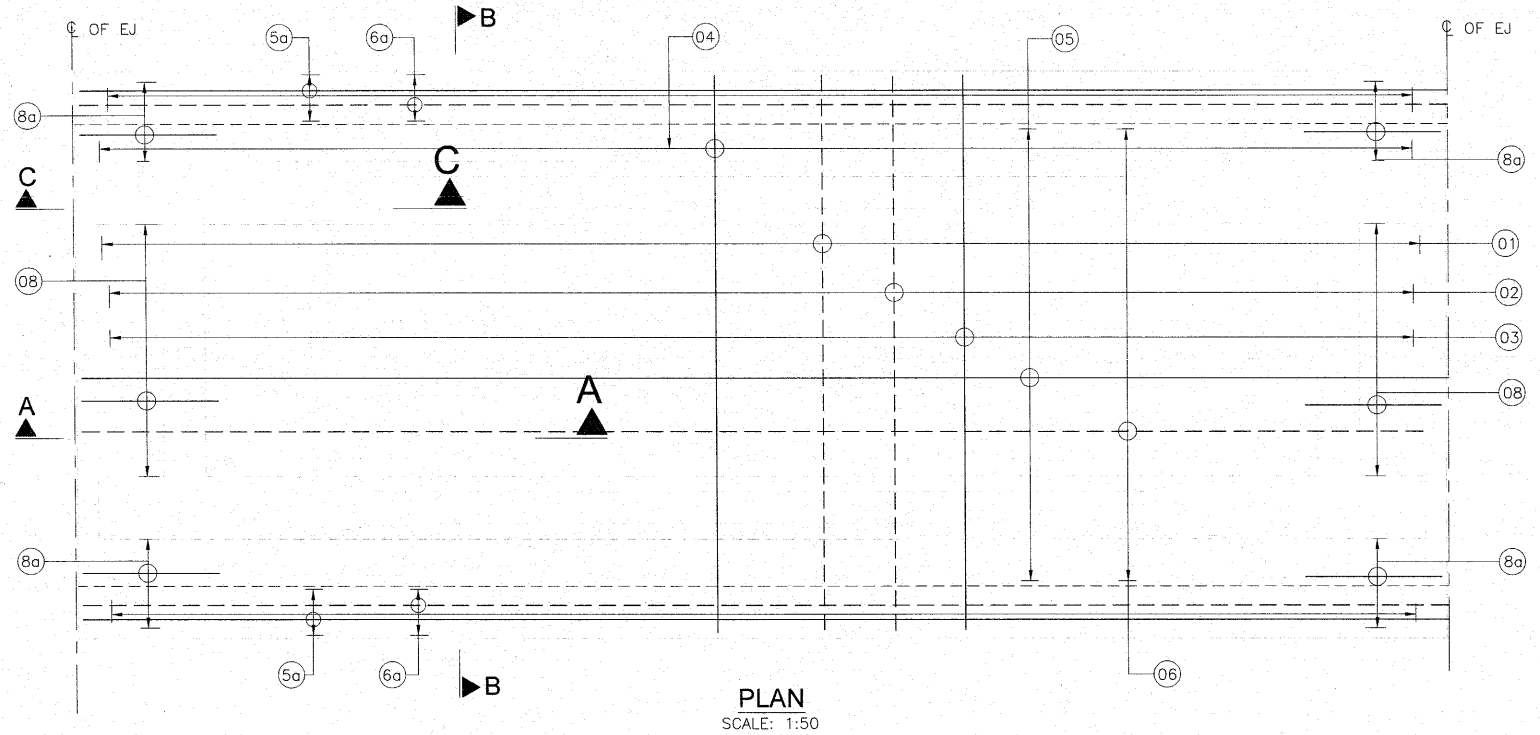

PLAN
SCALE: 1:50

SCHEDULE OF REINFORCEMENT

BAR MARK	SHAPE	BAR DIA & SPACING/Nos.	REMARKS
(01)	120	10 ϕ @ 150 C/C	BAR NO. 1 & 2 ARE ALTERNATE BARS
(02)		10 ϕ @ 150 C/C	
(03)	120	12 ϕ @ 150 C/C	BAR NO. 3 & 4 ARE ALTERNATE BARS
(04)	120 120	12 ϕ @ 150 C/C	
(05)		10 ϕ @ 200 C/C	
(5a)		16 ϕ–2x4 NOS.	
(06)		10 ϕ @ 200 C/C	
(6a)		16 ϕ–2x4 NOS.	
(07)		12 ϕ–5 NOS.	
(08)	400	12 ϕ @ 150 C/C	
(8a)	400	10 ϕ @ 150 C/C	

LEGEND:-

TOP REINFORCEMENT

BOTTOM REINFORCEMENT

Resident Engineer
STUP Consultants Pvt. Ltd.
Nagaon, Assam

CRASH BARRIER TO BE LEFT IN POSITION WHILE CASTING DECK SLAB

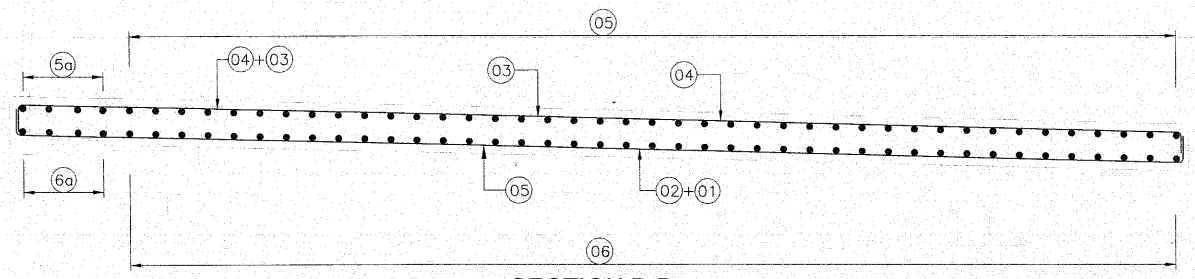

SECTION B-B
(SCALE 1:25)

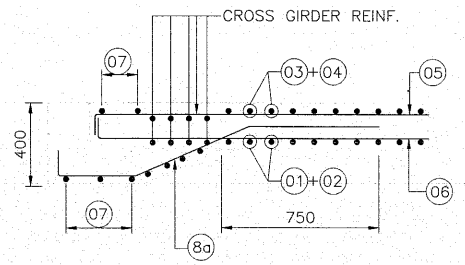

SECTION C-C
SCALE 1:25

Acting Team Leader
STUP Consultants Pvt. Ltd.
Nagaon, Assam

Rev.	Date	Description on Revisions
R0	13-12-2022	FIRST SUBMISSION

Revisions

CLIENT:- NATIONAL HIGHWAYS & INFRASTRUCTURE (Development Coporation Ltd)

AUTHORITY'S ENGINEER: STUP Consultants P. Ltd & Ayoleeza Consultants P. Ltd.

PROJECT MANAGEMENT CONSULTANT:- C E TESTING COMPANY PVT. LTD.

SAEFTY CONSULTANT:- Chaitanya Projects Consultancy Pvt. Ltd

AUTHORISED SIGNATORY | DATE | AUTHORISED SIGNATORY | DATE | AUTHORISED SIGNATORY | DATE

PROJECT: FOUR LANING OF NH-37 FROM RANGAGARA TO KALIABOR TINIALI (CH: 297.000 KM TO CH: 315.315 KM) IN NAGAON DISTRICT IN THE STATE OF ASSAM UNDER SARDP-NE, PHASE A ON EPC MODE

EPC CONTRACTOR: SIMPLEX INFRASTRUCTURES LIMITED, 27, SHAKESPEARE SARANI, KOLKATA-17, INDIA

CONSULTANTS:- AECOM, 9th Floor, Infinity Tower C DLF Cyber City, DLF Phase II, Gurgaon-122002, Haryana, India

MANISH VERMA	PRAMOD KIRAR	S. P. SINGH	S. RASTOGI
DRAWN	DESIGN	CHECKED BY	APPROVED BY

SCALE:- AS SHOWN

TITLE:- DIMENSION & REINFORCEMENT DETAILS OF RCC GIRDER OF SPAN 10.4M FOR MINOR BRIDGE AT CH. 307+192 (SCH-B CH. 306+917) (RCC DECK SLAB)

DRAWING NO.:- AECOM-DELD15159-DD-DWG-MNB-306+917-SUP-02 (SH 4 OF 4) REV. R0

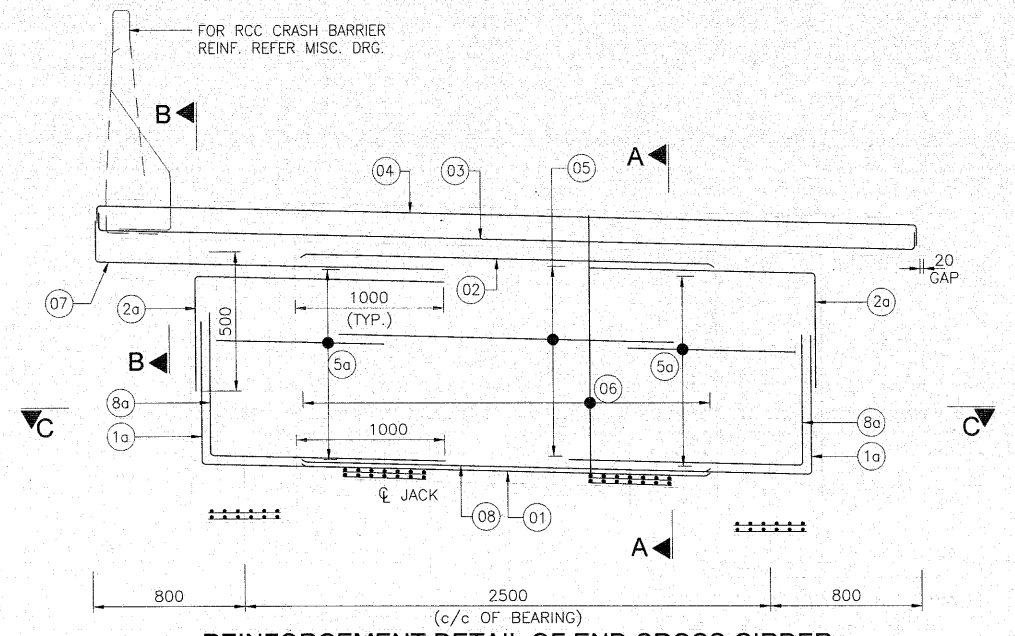

REINFORCEMENT DETAIL OF END CROSS GIRDER

(SCALE 1:30)

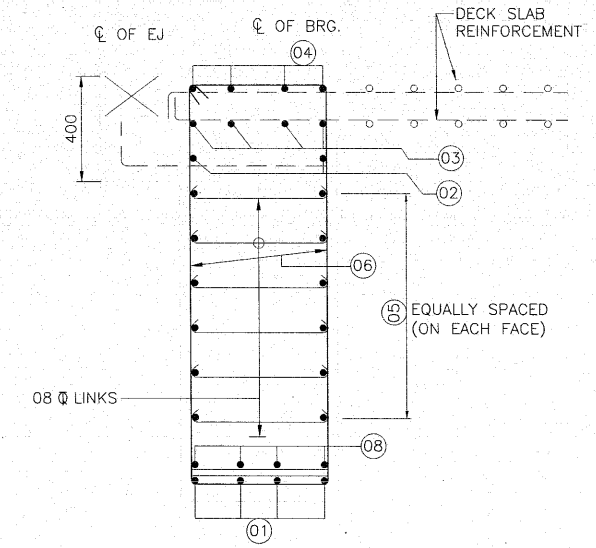

SECTION A-A

(SCALE 1:20)

SCHEDULE OF REINFORCEMENT

BAR MARK	SHAPE	BAR DIA & SPACING/Nos.
01		10Φ–4 Nos.
1a	650	10Φ–4x2 Nos.
02		10Φ–2 Nos.
2a	650	10Φ–2 Nos.
03	150	10Φ–4 Nos.
04	150	10Φ–4 Nos.
05		10Φ–1x7 Nos.
5a		10Φ–2x7 Nos.
06		2L–10Φ@200 C/C
07	200	10Φ–2x2 Nos.
08		10Φ–4 Nos.
8a		10Φ–4x2 Nos.

Resident Engineer
STUP Consultants Pvt. Ltd.
Nagaon, Assam

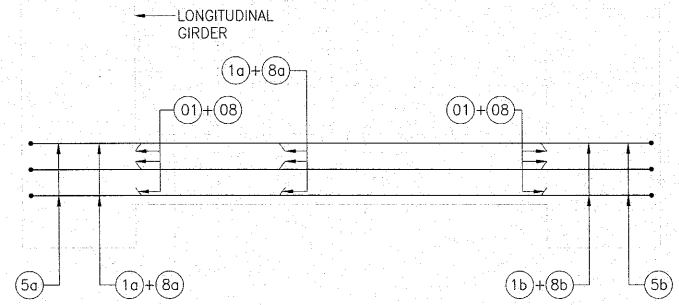

PLAN OF END CROSS GIRDER AT - CC

(SCALE 1:30)

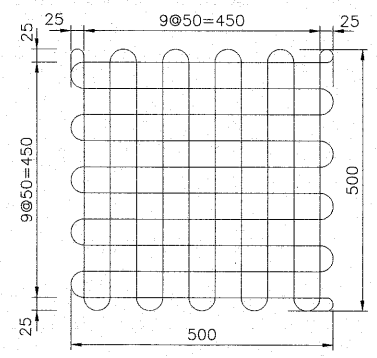

8Φ MESH TYPE-A

(MESH TO BE PLACE UNDER JACK)

(SCALE: 1:10)

Asstt. Tech. Leader
STUP Consultants Pvt. Ltd.
Nagaon, Assam

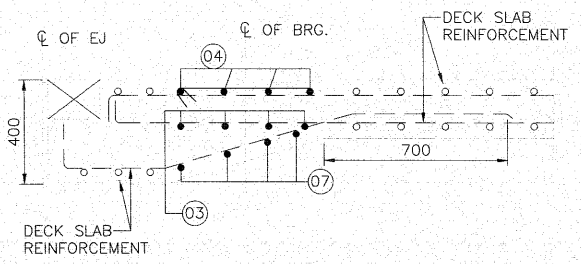

SECTION B-B

(SCALE 1:20)

AECOM India Private Limited Gurgaon

Rev.	Date	Description on Revisions
R0	13-12-2022	FIRST SUBMISSION

Revisions

CLIENT:- NATIONAL HIGHWAYS & INFRASTRUCTURE (Development Coporation Ltd)

AUTHORITY'S ENGINEER: STUP Consultants P. Ltd & Ayoleeza Consultants P. Ltd.

CONSULTANT:- CETEST Engineering Consultancy CE TESTING COMPANY PVT. LTD.

SAEFTY CONSULTANT:- Chaitanya Projects Consultancy Pvt. Ltd

PROJECT: FOUR LANING OF NH-37 FROM RANGAGARA TO KALIABOR TINIALI (CH: 297.000 KM TO CH: 315.315 KM) IN NAGAON DISTRICT IN THE STATE OF ASSAM UNDER SARDP-NE, PHASE A ON EPC MODE

EPC CONTRACTOR:- SIMPLEX INFRASTRUCTURES LIMITED, 27, SHAKESPEARE SARANI KOLKATA-17, INDIA

CONSULTANTS:- AECOM, 9th Floor, Infinity Tower C DLF Cyber City, DLF Phase II, Gurgaon-122002, Haryana, India

AUTHORISED SIGNATORY	DATE	AUTHORISED SIGNATORY	DATE	AUTHORISED SIGNATORY	DATE

DRAWN	DESIGN	CHECKED BY	APPROVED BY
MANISH VERMA	PRAMOD KIRAR	S P. SINGH	S. RASTOGI

SCALE:- AS SHOWN

TITLE:- DIMENSION & REINFORCEMENT DETAILS OF RCC GIRDER OF SPAN 10.4M FOR MINOR BRIDGE AT CH. 307+192 (SCH-B CH. 306+917) (END-CROSS-GIRDER)

DRAWING NO.:- AECOM-DELD15159-DD-DWG-MNB-306+917-SUP-02 (SH 3 OF 4) REV. R0

ANNEXURE 4

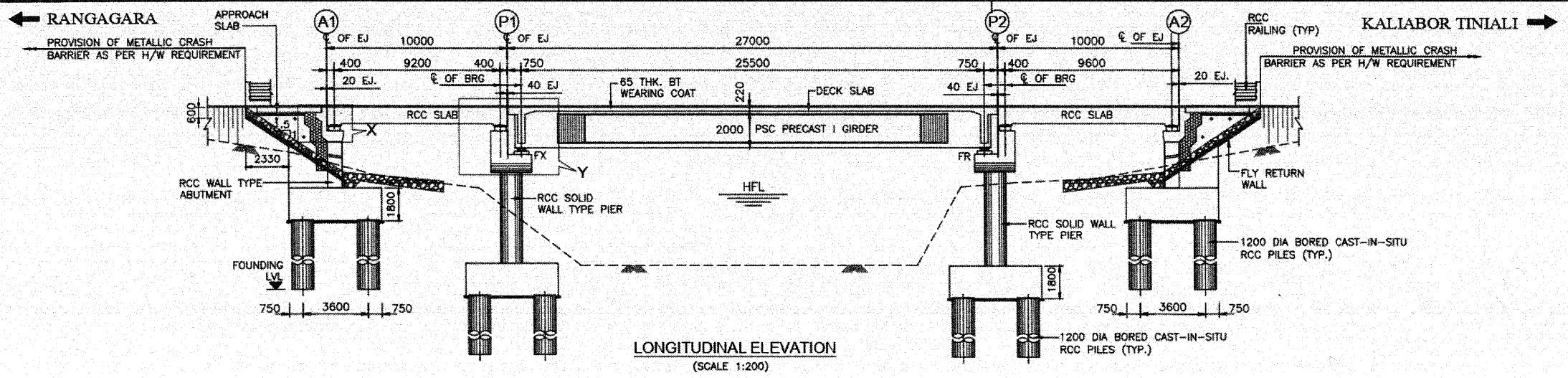

LONGITUDINAL ELEVATION
(SCALE 1:200)

FRL	LHS	69.557	69.570		69.531	69.491
	RHS	68.821	68.834		68.795	68.755
GL/BL		65.325	62.417	58.976	63.440	64.575
PILE CAP TOP LVL.		64.825	61.917		62.940	64.075
FOUNDING LVL.		---	---		---	---
DESIGN CHAINAGE		303+471.5	303+481.5	303+495	303+508.5	303+518.5

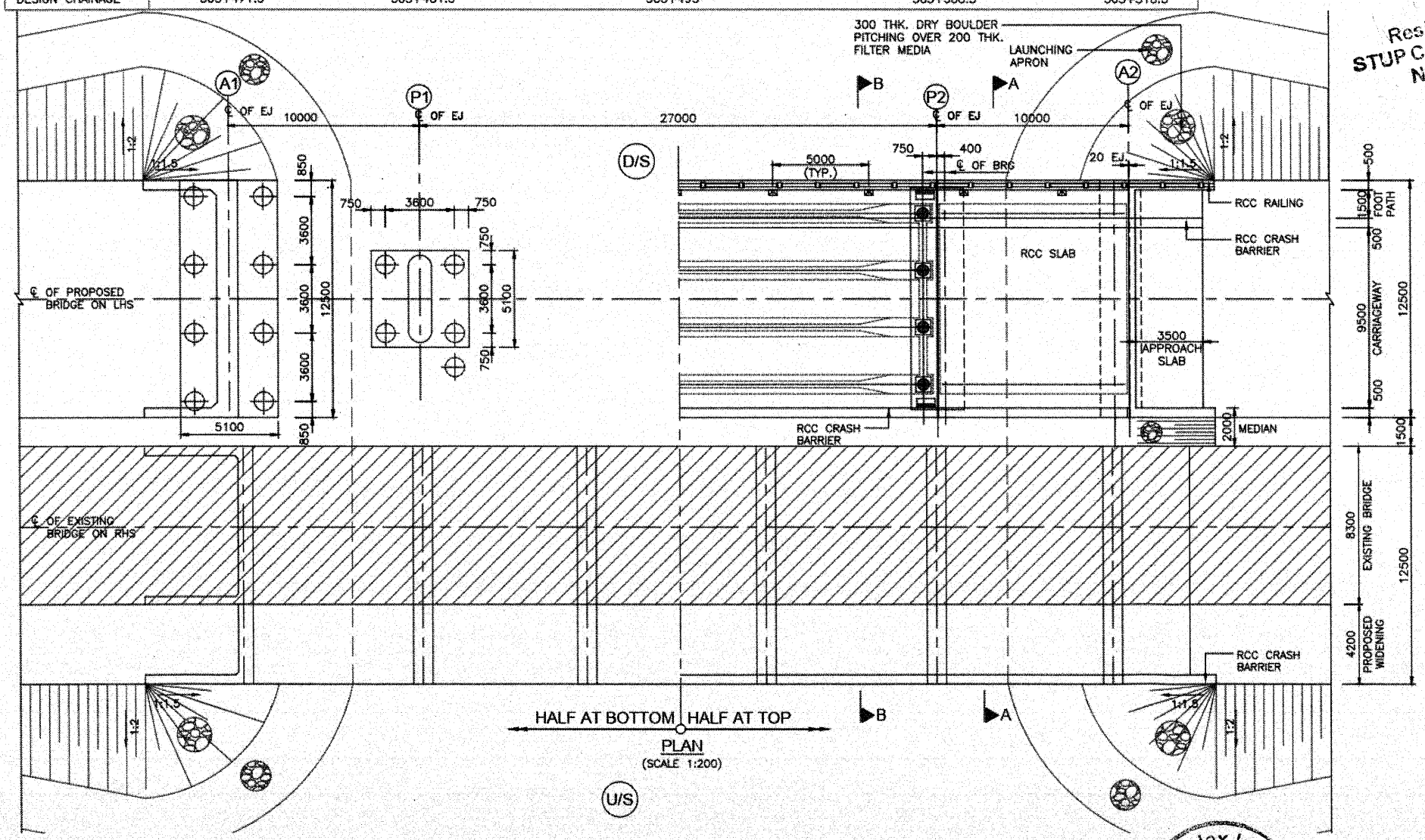

PLAN
(SCALE 1:200)

NOTES:-

1. ALL DIMENSIONS ARE IN MILLIMETERS, LEVELS ARE IN METERS UNLESS OTHERWISE MENTIONED.
2. NO DIMENSION SHALL BE MEASURED FROM THE DRAWINGS. ONLY WRITTEN DIMENSIONS SHALL BE FOLLOWED.
3. THE DRAWING SHALL BE READ IN CONJUNCTION WITH RELEVANT HIGHWAY PLAN AND PROFILE DRAWINGS. FRL, BED LEVEL, CAMBER/SUPERELEVATION AND LAYOUT SHALL ALSO BE VERIFIED AT SITE BEFORE EXECUTION. DISCEPANCIES SHALL BE BROUGHT TO THE NOTICE OF THE ENGINEER FOR REVISION IN DRAWINGS, IF ANY.
4. CHAINAGE OF THE STRUCTURE IS AT THE CENTER LINE OF THE PROPOSED STRUCTURE.
5. THE REINFORCEMENT SHALL BE HYSD BARS OF GRADE DESIGNATION Fe 500D CONFORMING TO IS 1786-2008.
6. CONCRETE SHALL BE DESIGN MIX WITH A MINIMUM 28 DAYS CHARACTERISTIC CUBE STRENGTH FOR DIFFERENT ELEMENTS AS FOLLOWS:
   - a.PSC PRECAST I-GIRDER M45
   - b.RCC DECK SLAB & CROSS GIRDER M40
   - c.RCC SOLID SLAB M35
   - d.RCC ABUT. & ABUT. CAP M35
   - e.RCC PILE & PILE CAP M35
   - f.RCC CRASH BARRIER M40
   - g.RCC APPROACH SLAB M30
   - h.PCC LEVELING COURSE M15
   - i. RCC PEDESTALS M40
   - j. RCC SEISMIC STOPPER M35
7. CLEAR COVER TO OUTER STEEL SHALL BE AS FOLLOWS:-
   - a.SUPERSTRUCTURE 40MM
   - b.RCC ABUT. STEM EARTH SIDE 75MM
   - c.RCC ABUT. OUTER SIDE 40MM
   - d.RCC ABUT. CAP 40MM
   - e.SEISMIC STOPPERS 40MM
   - f.PILE & PILE CAP 75MM
   - g.CRASH BARRIER 40MM
8. 65 THK. BITUMINOUS WEARING COAT SHALL BE ADOPTED IN CONFORMITY WITH SECTION 2702 OF MORTH SPECIFICATIONS.
9. DRAINAGE SPOUT 100MM DIA SPACED 5000MM C/C SHALL BE PROVIDED IN SUPERSTRUCTURE.
10. CONDITION OF EXPOSURE IS MODERATE.
11. THIS STRUCTURE LIES IN SEISMIC ZONE V.
12. FORMATION LEVEL SHOWN IS AT MEDIAN EDGE.
13. THE STRUCTURE HAS BE DESIGNED FOR LIVE LOAD COMBINATIONS CONFORMING TO IRC: 6-2014.
14. SINGLE STRIP SEAL TYPE EXPANSION JOINT SHALL BE PROVIDED AS PER MODIFIED INTERIM SPECIFICATION FOR EXPANSION JOINTS ISSUED VIDE "MORTH" CIRCULAR NO. RW/NH-34059/1/98-S&R DATED 30-11-2000 & 25-01-2001.
15. 600MM THICK FILTER MEDIA SHALL BE PROVIDED BEHIND SOLID ABUTMENT WALL & RETURN WALLS.
16. ALL SOLID WALLS RETAINING THE EARTH SHALL BE PROVIDED WITH WEEP HOLES (100MM DIA AND SLOPE 1V:20H) STARTING 150MM ABOVE THE GROUND LEVEL AND SPACED 1000MM C/C BOTH HORIZONTALLY AND VERTICALLY IN STAGGERED MANNER.
17. TAR PAPER BEARING SHALL BE PROVIDED BETWEEN APPROACH SLAB & BRACKET.
18. THE MAXIMUM PILE LOAD (TONNES) AS PER DESIGN IS:

NORMAL		SEISMIC	
A1	A2	A1	A2

WHICH IS LESS THAN PILE LOAD CAPACITY AT FOUNDING LEVEL AS PER GEOTECH REPORT.

19. PERMANENT STEEL LINER 6MM THK. SHALL BE PROVIDED UPTO MAX. SCOUR LEVEL.
20. FOR DETAILS OF FLOOR PROTECTION WORKS SUCH AS LAUNCHING APRON, REFER SEPARATE DRAWING.

REFERENCE DRAWINGS:

1.) SUPERSTRUCTURE:-
AECOM-DELD15159-STR-DWG-MNB-303+200-SUP-01 (SH1 TO 8)

2.) SUBSTRUCTURE:-
AECOM-DELD15159-STR-DWG-MNB-303+200-SUB-01 (SH1 TO 5)

3.) MISCELLANEOUS DWGS.
AECOM-DELD15159-MISC-01

4.) WIDENING METHODOLOGY
AECOM-DELD15159-STR-DWG-MNB-303+200-WID-01

5.) LAUNCHING APRON
AECOM-DELD15159-STR-DWG-MNB-303+200-APRON-01

LEGEND:-

FRL	-	FINISHED ROAD LEVEL
GL.	-	GROUND LEVEL
LVL.	-	LEVEL
FDN	-	FOUNDATION.
EJ	-	EXPANSION JOINT
LBL	-	LOWEST BED LEVEL
HFL	-	HIGHEST FLOOD LEVEL
H/W	-	HIGHWAY
MSL	-	MAXIMUM SCOUR LEVEL
BT	-	BITUMINOUS

Resident Engineer
STUP Consultants Pvt. Ltd.
Nagaon, Assam

Acting Team Leader
STUP Consultants Pvt. Ltd.
Nagaon, Assam

Rev.	Date	Description on Revisions
R0	JULY 2017	INITIAL SUBMISSION

Revisions

CLIENT:- NATIONAL HIGHWAYS & INFRASTRUCTURE (Development Corporation Ltd)

AUTHORITY'S ENGINEER: STUP Consultants P. Ltd & Ayoleeza Consultants P. Ltd. — AUTHORISED SIGNATORY | DATE

PROOF CHECKED CONSULTANT:- CETEST — AUTHORISED SIGNATORY | DATE

SAEFTY CONSULTANT:- Chaitanya Projects Consultancy Pvt. Ltd — AUTHORISED SIGNATORY | DATE

PROJECT: FOUR LANING OF NH-37 FROM RANGAGARA TO KALIABOR TINIALI (CH: 297.000 KM TO CH: 315.315 KM) IN NAGAON DISTRICT IN THE STATE OF ASSAM UNDER SARDP-NE, PHASE A ON EPC MODE

EPC CONTRACTOR:- SIMPLEX INFRASTRUCTURES LIMITED, 27, SHAKESPEARE SARANI, KOLKATA, INDIA

CONSULTANTS:- AECOM, 9th Floor, Infinity Tower C DLF Cyber City, DLF Phase II, Gurgaon-122002, Haryana, India

H. SEKHAR	S. P. SINGH	S. YADAV	S. RAVINDRA
DRAWN	DESIGN	CHECKED BY	APPROVED BY

SCALE:- AS SHOWN

TITLE:- GENERAL ARRANGEMENT DRAWING FOR MINOR BRIDGE AT CH. 303+495 (SCH-B CH. 303+200) (AMONI RIVER)

DRAWING NO.:- AECOM-DELD15159-STR-DWG-MIN-303+200-GAD-01 (SH 1 OF 2) — REV. R0

ANNEXURE 4

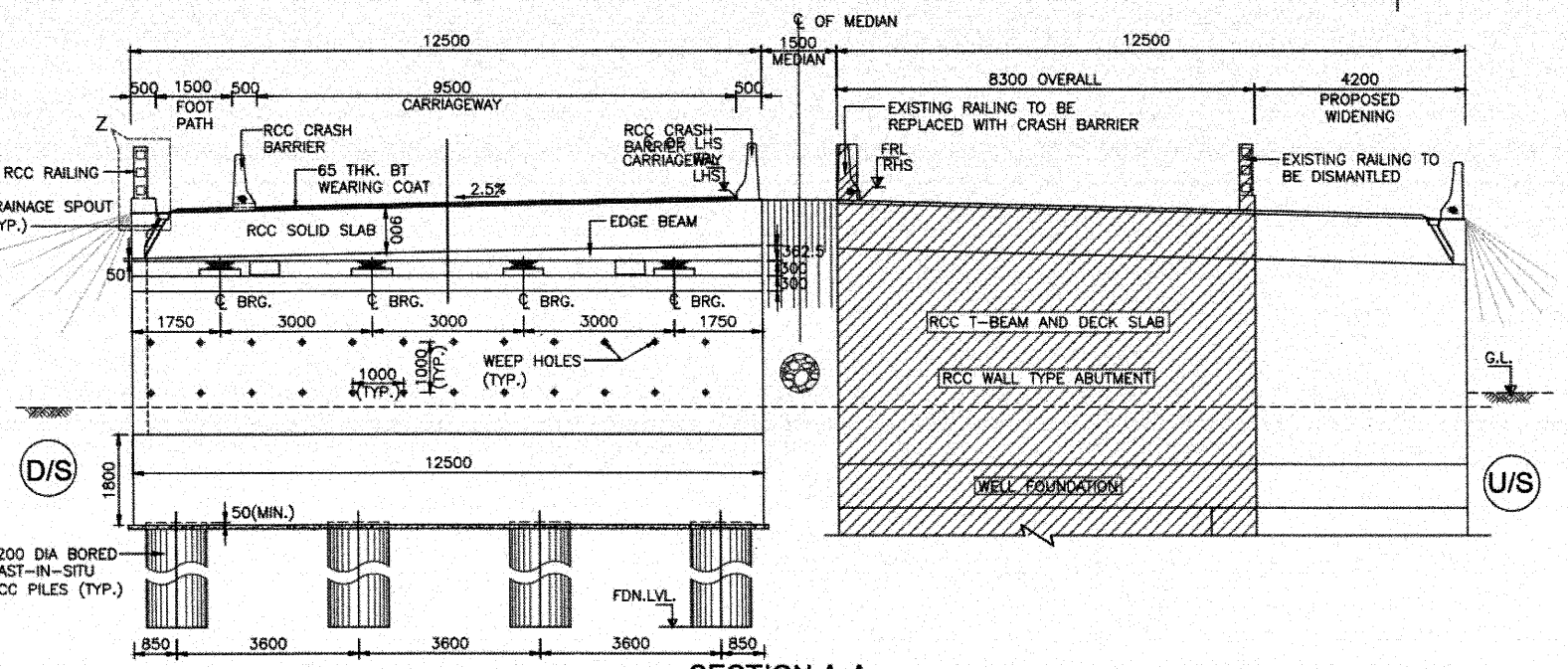

SECTION A-A
(SCALE : 1:75)

EXISTING BRIDGE

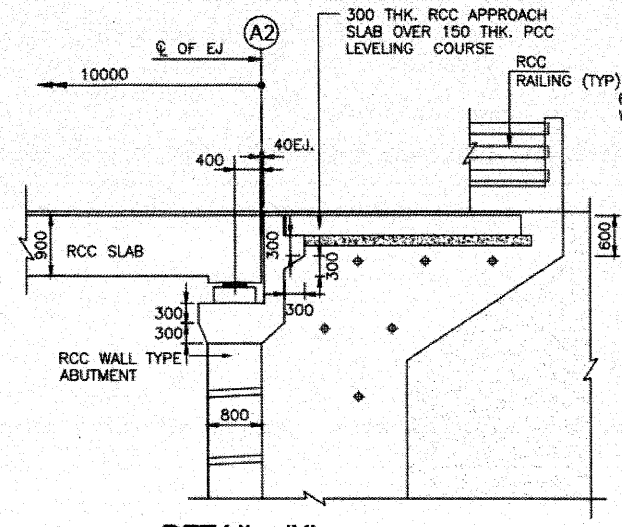

DETAIL - 'X'
(SCALE 1:75)

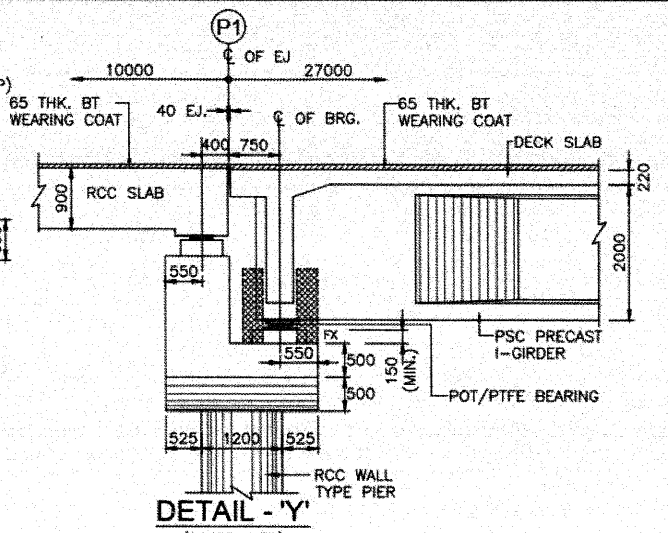

DETAIL - 'Y'
(SCALE 1:75)

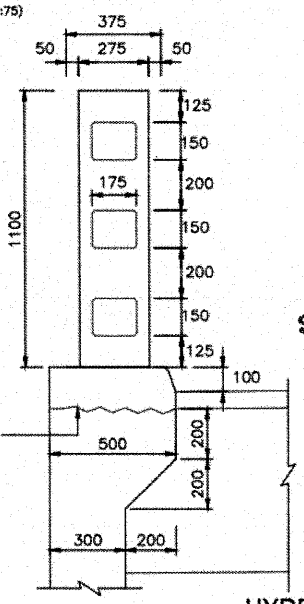

DETAIL-'Z'
(SCALE 1:20)

BORE HOLE DETALS

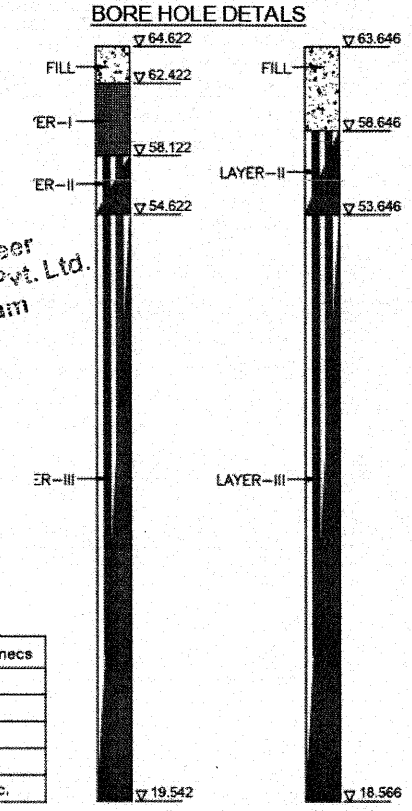

BH-01 BH-02

HYDROLOGY DATA

DISCHARGE (Q)	220.460 cumecs
HFL	66.017 m
LBL	58.976 m
MSL FOR ABUTMENTS	60.082 m
MSL FOR PIER	56.670 m
AVERAGE VELOCITY	1.142 m/sec.

Resident Engineer
STUP Consultants Pvt. Ltd.
Nagaon, Assam

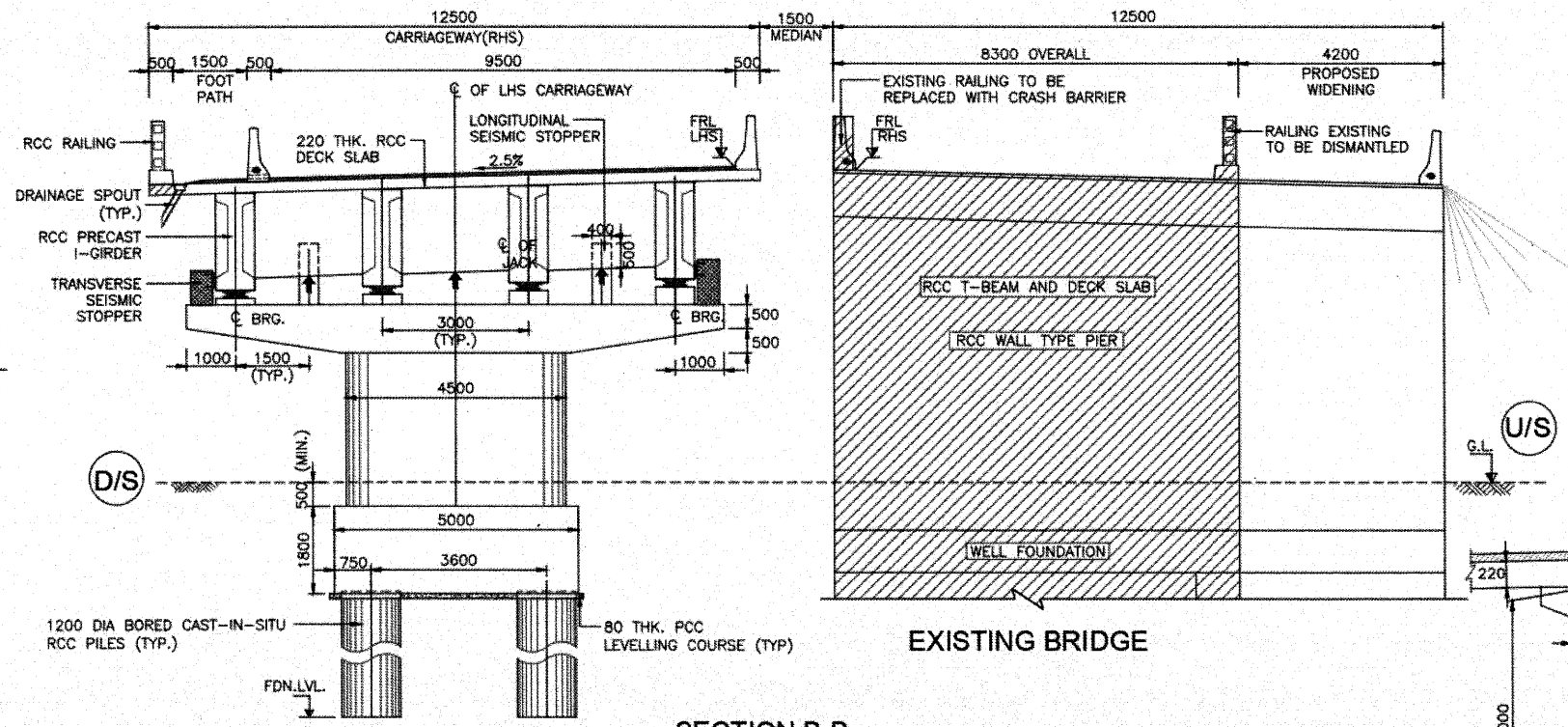

SECTION B-B
(SCALE : 1:75)

EXISTING BRIDGE

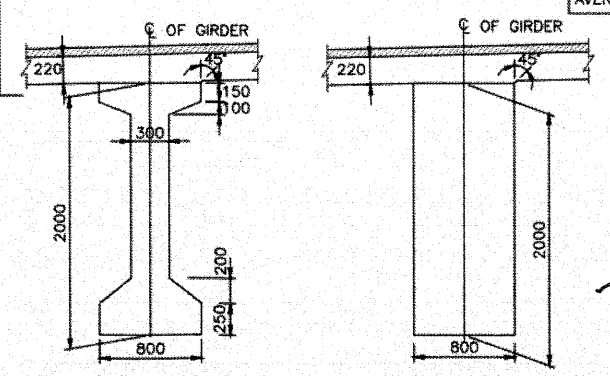

AT MID SPAN AT SUPPORT

DETAILS OF PRECAST PSC GIRDER
(SCALE 1:20)

Acting Team Leader
STUP Consultants Pvt. Ltd.
Nagaon, Assam

LEGEND FOR BORE HOLE

SYMBOL	DESCRIPTION
	FILL - (greyish yellow clayey sandy silt/silty sand)
	LAYER-I - yellowish grey very soft silty clay mixed traces of sand
	LAYER-II - greyish yellow loose to medium dense silty sand
	LAYER-III - grey / yellowish brown dense to verydense silty sand

Rev.	Date	Description on Revisions
R0	JULY 2017	INITIAL SUBMISSION

Revisions

CLIENT:- NATIONAL HIGHWAYS & INFRASTRUCTURE (Development Coporation Ltd)

AUTHORITY'S ENGINEER: STUP Consultants P. Ltd & Ayoleeza Consultants P. Ltd.

PROOF CHECKED CONSULTANT:- CETEST

SAEFTY CONSULTANT:- Chaitanya Projects Consultancy Pvt. Ltd

AUTHORISED SIGNATORY | DATE | AUTHORISED SIGNATORY | DATE | AUTHORISED SIGNATORY | DATE

PROJECT: FOUR LANING OF NH-37 FROM RANGAGARA TO KALIABOR TINIALI (CH: 297.000 KM TO CH: 315.315 KM) IN NAGAON DISTRICT IN THE STATE OF ASSAM UNDER SARDP-NE, PHASE A ON EPC MODE

EPC CONTRACTOR: SIMPLEX INFRASTRUCTURES LIMITED, 27, SHAKESPEARE SARANI, KOLKATA-71 (WB)

Simplex Infrastructures Ltd.

CONSULTANTS:- AECOM, 9th Floor, Infinity Tower C DLF Cyber City, DLF Phase II, Gurgaon-122002, Haryana, India

DRAWN | DESIGN | CHECKED BY | APPROVED BY

SCALE:- AS SHOWN

TITLE:- GENERAL ARRANGEMENT DRAWING FOR MINOR BRIDGE AT CH. 303+495 (SCH-B CH. 303+200) (AMONI RIVER)

DRAWING NO.:- AECOM-DELD15159-STR-DWG-MIN-303+200-GAD-01 (SH 2 OF 2) REV. R0

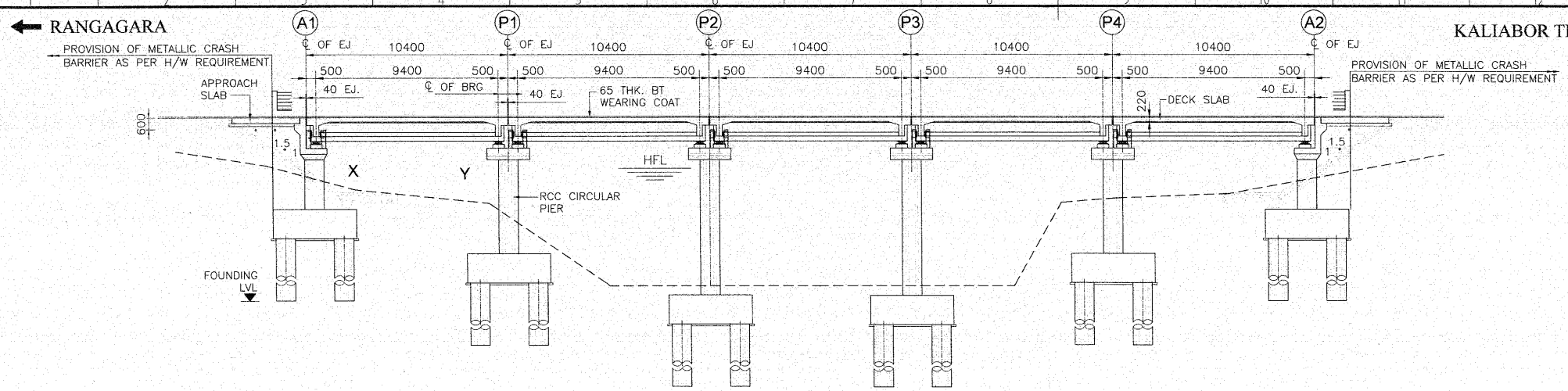

LONGITUDINAL ELEVATION

(SCALE 1:200)

FRL	RHS	68.812	68.834	68.833		68.830	68.814	68.778
GL/BL		65.694	63.570	60.087	58.976	60.080	64.574	65.604
PILE CAP TOP LVL.		64.825	58.976	58.976		58.976	58.976	64.825
FOUNDING LVL.		37.622	32.476	32.476		32.476	32.476	37.622
DESIGN CHAINAGE		303+464	303+474.4	303+484.8	303+490	303+495.2	303+505.6	303+516

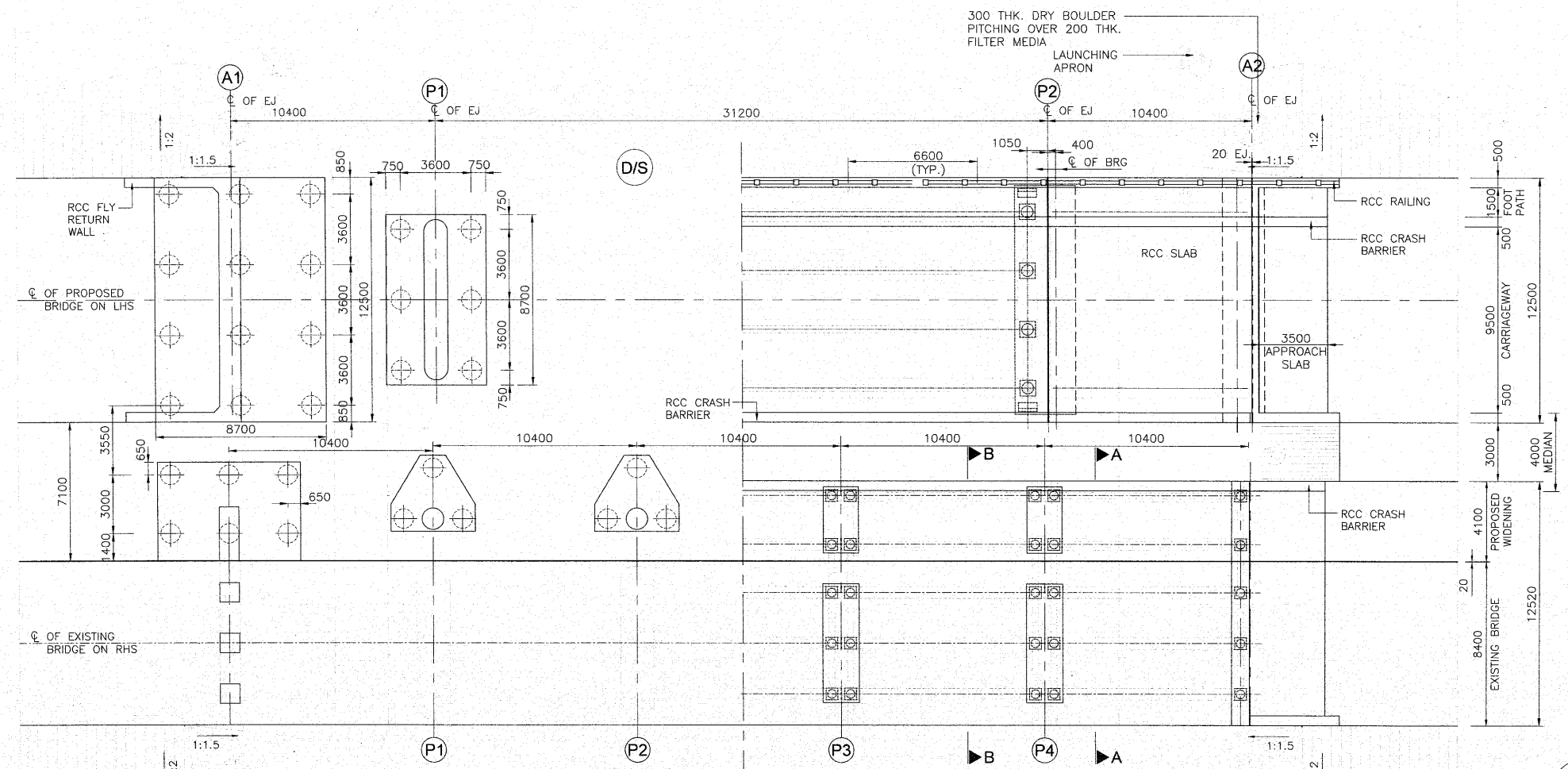

PLAN

(SCALE 1:200)

NOTES:-

1. ALL DIMENSIONS ARE IN MILLIMETERS, LEVELS ARE IN METERS UNLESS OTHERWISE MENTIONED.
2. NO DIMENSION SHALL BE MEASURED FROM THE DRAWINGS. ONLY WRITTEN DIMENSIONS SHALL BE FOLLOWED.
3. THE DRAWING SHALL BE READ IN CONJUNCTION WITH RELEVANT HIGHWAY PLAN AND PROFILE DRAWINGS. FRL, BED LEVEL, CAMBER/SUPERELEVATION AND LAYOUT SHALL ALSO BE VERIFIED AT SITE BEFORE EXECUTION. DISCEPANCIES SHALL BE BROUGHT TO THE NOTICE OF THE ENGINEER FOR REVISION IN DRAWINGS, IF ANY.
4. CHAINAGE OF THE STRUCTURE IS AT THE CENTER LINE OF THE PROPOSED STRUCTURE.
5. THE REINFORCEMENT SHALL BE HYSD BARS OF GRADE DESIGNATION Fe 500D CONFORMING TO IS 1786–2008.
6. CONCRETE SHALL BE DESIGN MIX WITH A MINIMUM 28 DAYS CHARACTERISTIC CUBE STRENGTH FOR DIFFERENT ELEMENTS AS FOLLOWS:
   - a.RCC GIRDER — M35
   - b.RCC DECK SLAB & CROSS GIRDER — M35
   - c.RCC SOLID SLAB — M35
   - d.RCC ABUT. & ABUT. CAP — M35
   - e.RCC PILE & PILE CAP — M35
   - f. RCC CRASH BARRIER — M40
   - g.RCC APPROACH SLAB — M30
   - h.PCC LEVELING COURSE — M15
   - i. RCC PEDESTALS — M40
   - j. RCC SEISMIC STOPPER — M35
7. CLEAR COVER TO OUTER STEEL SHALL BE AS FOLLOWS:–
   - a.SUPERSTRUCTURE — 40MM
   - b.RCC ABUT. STEM EARTH SIDE — 75MM
   - c.RCC ABUT. OUTER SIDE — 75MM
   - d.RCC ABUT. CAP — 40MM
   - e.SEISMIC STOPPERS — 40MM
   - f. PILE & PILE CAP — 75MM
   - g.CRASH BARRIER — 40MM
8. 65mm THK. BITUMINOUS WEARING COAT SHALL BE ADOPTED IN CONFORMITY WITH SECTION 2702 OF MORTH SPECIFICATIONS.
9. DRAINAGE SPOUT 100MM DIA SPACED 5000MM C/C SHALL BE PROVIDED IN SUPERSTRUCTURE.
10. CONDITION OF EXPOSURE IS MODERATE.
11. THIS STRUCTURE LIES IN SEISMIC ZONE V.
12. FORMATION LEVEL SHOWN IS AT MEDIAN EDGE.
13. THE STRUCTURE HAS BE DESIGNED FOR LIVE LOAD COMBINATIONS CONFORMING TO IRC: 6–2014.
14. SINGLE STRIP SEAL TYPE EXPANSION JOINT SHALL BE PROVIDED AS PER MODIFIED INTERIM SPECIFICATION FOR EXPANSION JOINTS ISSUED VIDE "MORTH" CIRCULAR NO. RW/NH–34059/1/98–S&R DATED 30–11–2000 & 25–01–2001.
15. 600MM THICK FILTER MEDIA SHALL BE PROVIDED BEHIND SOLID ABUTMENT WALL & RETURN WALLS.
16. ALL SOLID WALLS RETAINING THE EARTH SHALL BE PROVIDED WITH WEEP HOLES (100MM DIA AND SLOPE 1V:20H) STARTING 150MM ABOVE THE GROUND LEVEL AND SPACED 1000MM C/C BOTH HORIZONTALLY AND VERTICALLY IN STAGGERED MANNER.
17. TAR PAPER BEARING SHALL BE PROVIDED BETWEEN APPROACH SLAB & BRACKET.
18. THE MAXIMUM PILE LOAD (TONNES) AS PER DESIGN IS:

NORMAL		SEISMIC	
A1	A2	A1	A2
134		149	

WHICH IS LESS THAN PILE LOAD CAPACITY AT FOUNDING LEVEL AS PER GEOTECH REPORT.

19. PERMANENT STEEL LINER 6MM THK. SHALL BE PROVIDED UPTO MAX. SCOUR LEVEL.
20. FOR DETAILS OF FLOOR PROTECTION WORKS SUCH AS LAUNCHING APRON, REFER SEPARATE DRAWING.

REFERENCE DRAWINGS:

1.) SUPERSTRUCTURE:–
AECOM–DELD15159–STR–DWG–MNB–303+200–SUP–01 (SH1 TO 8)

2.) SUBSTRUCTURE:–
AECOM–DELD15159–STR–DWG–MNB–303+200–SUB–01 (SH1 TO 5)

3.) MISCELLANEOUS DWGS.
AECOM–DELD15159–MISC–01

4.) GAD LHS NEW 2 LANE BRIDGE:–
AECOM–DELD15159–STR–DWG–MNB–303+200–GAD–01

5.) LAUNCHING APRON
AECOM–DELD15159–STR–DWG–MNB–303+200–APRON–01

LEGEND:-

FRL	–	FINISHED ROAD LEVEL
GL	–	GROUND LEVEL
LVL.	–	LEVEL
FDN	–	FOUNDATION.
EJ	–	EXPANSION JOINT
LBL	–	LOWEST BED LEVEL
HFL	–	HIGHEST FLOOD LEVEL
H/W	–	HIGHWAY
MSL	–	MAXIMUM SCOUR LEVEL
BT	–	BITUMINOUS

Resident Engineer
STUP Consultants Pvt. Ltd.
Nagaon, Assam

Acting Team Leader
STUP Consultants Pvt. Ltd.
Nagaon, Assam

Rev.	Date	Description on Revisions
R2	23-03-2023	AS PER IE OBSERVATIONS
R1	DEC. 2020	LONGITUDINAL EXPANSION JOINT ADDED
R0	MARCH 2018	FIRST SUBMISSION

Revisions

CLIENT:- NATIONAL HIGHWAYS & INFRASTRUCTURE (Development Coporation Ltd)

AUTHORITY'S ENGINEER: STUP Consultants P. Ltd & Ayoleeza Consultants P. Ltd.

PROOF CHECKED CONSULTANT:- CETEST C E TESTING COMPANY PVT. LTD.

SAEFTY CONSULTANT:- Chaitanya Projects Consultancy Pvt. Ltd

AUTHORISED SIGNATORY | DATE | AUTHORISED SIGNATORY | DATE | AUTHORISED SIGNATORY | DATE

PROJECT: FOUR LANING OF NH-37 FROM RANGAGARA TO KALIABOR TINIALI (CH: 297.000 KM TO CH: 315.315 KM) IN NAGAON DISTRICT IN THE STATE OF ASSAM UNDER SARDP-NE, PHASE A ON EPC MODE

EPC CONTRACTOR: SIMPLEX INFRASTRUCTURES LIMITED, 116 SHAKESPEARE SARANI, KOLKATA-17, INDIA

CONSULTANTS:- AECOM, 9th Floor, Infinity Tower C DLF Cyber City, DLF Phase II, Gurgaon-122002, Haryana, India

DRAWN	DESIGN	CHECKED BY	APPROVED BY
R. BENIWAL	S. P. SINGH	S. YADAV	S. RASTOGI

SCALE:- AS SHOWN

TITLE:- GENERAL ARRANGEMENT DRAWING FOR WIDENING OF EXISTING MINOR BRIDGE AT CH. 303+490 (SCH-B CH. 303+200) (AMONI RIVER)

DRAWING NO.:- AECOM-DELD15159-STR-DWG-MNB-303+200-GAD-02 (SH 1 OF 2) | REV. R1

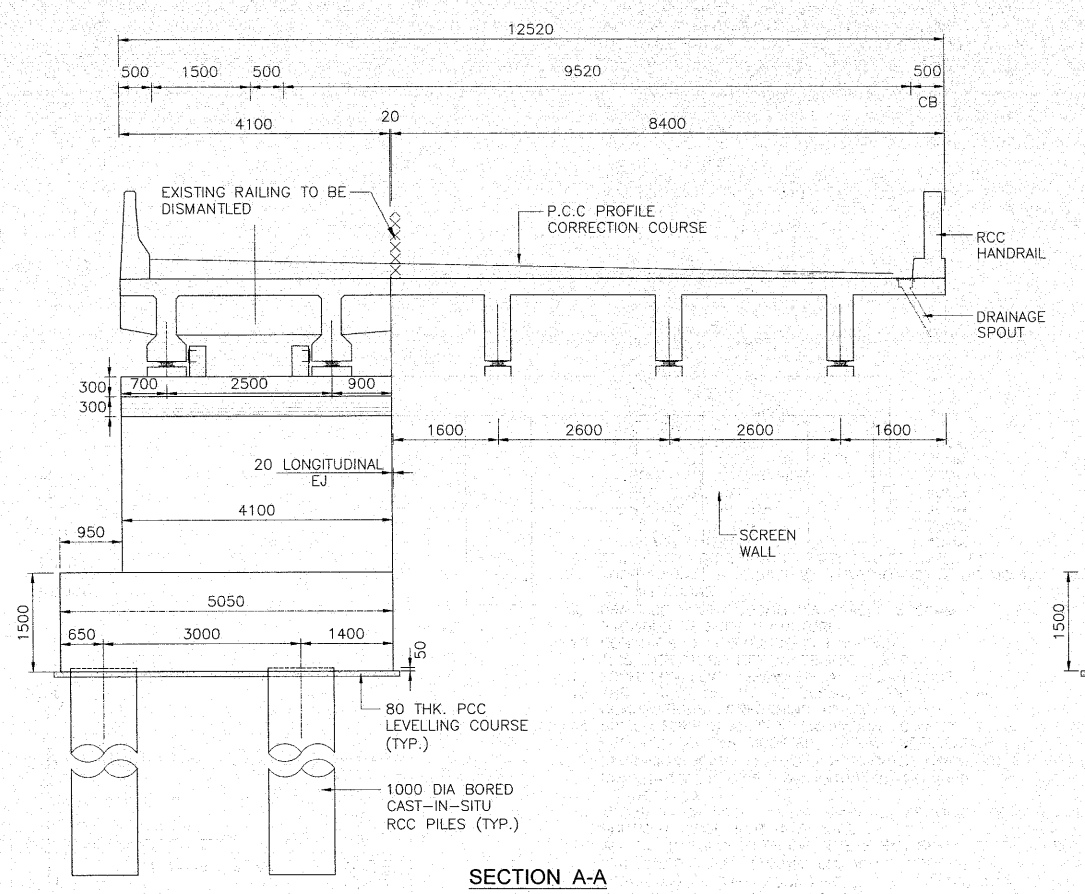

SECTION A-A
SCALE 1:100

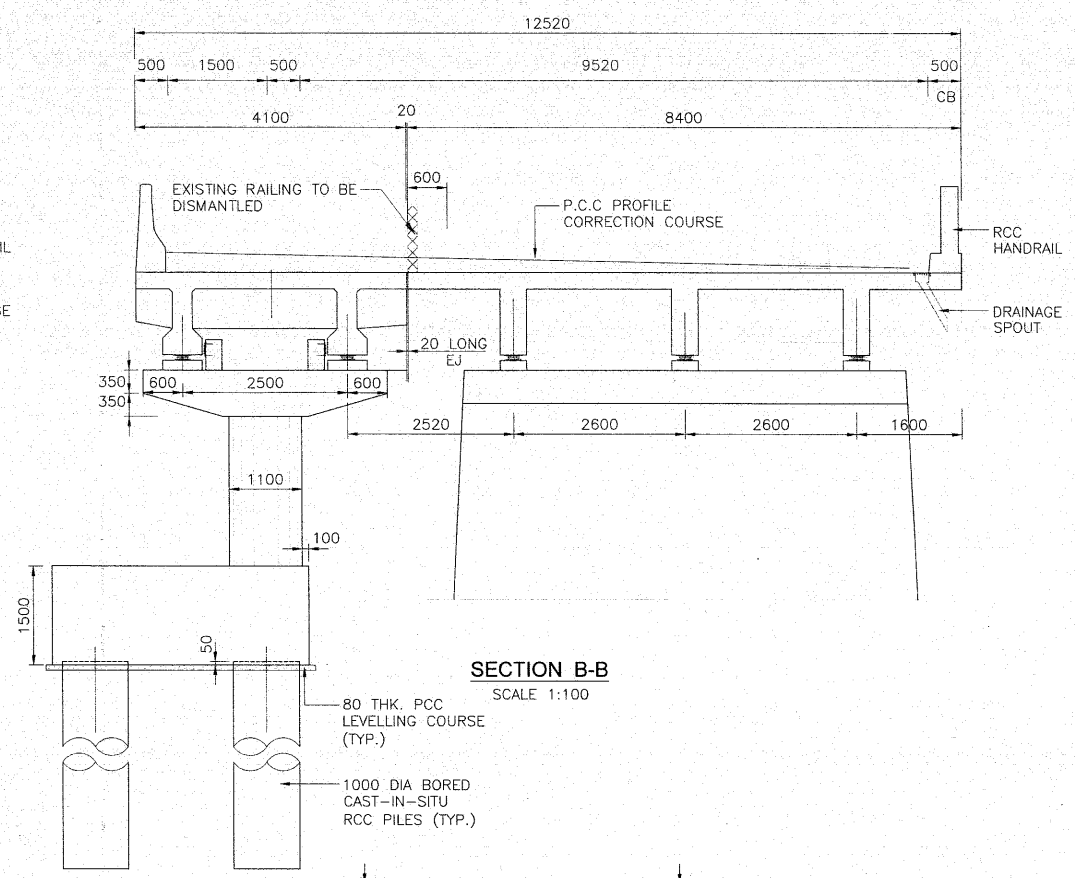

SECTION B-B
SCALE 1:100

RANGAGARA ← → KALIABOR TINIALI

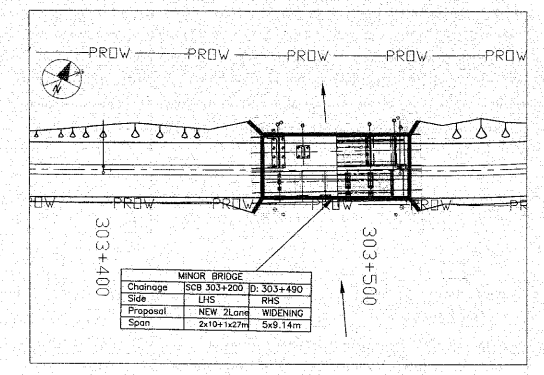

KEY PLAN

BORE HOLE DETALS

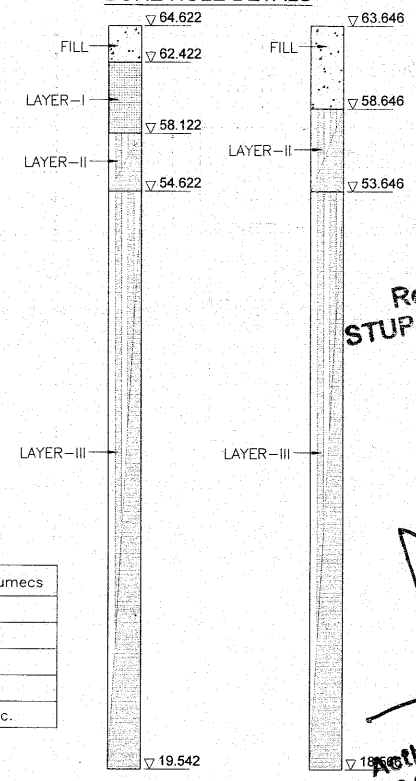

BH-01 BH-02

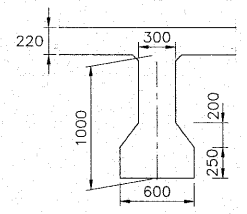

MID SECTION

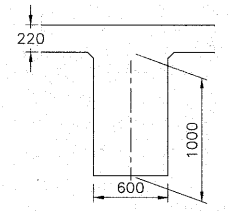

SUPPORT SECTION

CROSS SECTION OF RCC T-GIRDER
(SCALE 1:30)

HYDROLOGY DATA

DISCHARGE (Q)	182.046 cumecs
HFL	66.104 m
LBL	58.976 m
MSL FOR ABUTMENTS	58.976 m
MSL FOR PIER	57.827 m
AVERAGE VELOCITY	1.44 m/sec.

WIDENING METHODOLOGY

1. EXISTING RCC T-GIRDER+DECK SLAB SHALL BE WIDENED WITH RCC I-GIRDER+DECK SLAB TYPE OF STRUCTURE.
2. DISMANTLE THE PARAPET/RAILING ON TOP OF EXISTING STRUCTURE ON THE SIDE(S) OF PROPOSED WIDENING.
3. DISMANTLE THE EXISTING RETURN WALL ON WIDENING SIDE.
4. THOROUGHLY CLEAN THE SURFACE OF EXISTING STRUCTURE WITH MECHANICAL/HAND TOOLS TO REMOVE DEBRIS AND ACCUMULATED WASTE. CLEAN THE REINFORCEMENT PROTRUDING FROM OLD CONCRETE OF RUST, LOOSE MORTAR OR ANY OTHER CONTAMINATION. SOAK THE OLD SURFACE WITH WATER.
5. APPLY EPOXY COAT ON OLD CONCRETE SURFACE.
6. 3 PILE ARRANGEMENT OF 1M. DIA PILE IS PROVIDED AS A SEPARATE FOUNDATION & SUBSTRUCTURE FOR WIDENED WIDTH OF BRIDGE.
7. TWO TIMES OF DIAMETER OF PILE CLEAR SPACING IS KEPT FROM EXISTING FOUNDATION KEEPING THE MINIMUM SPACING REQUIRED FOR FRICTION PILES.

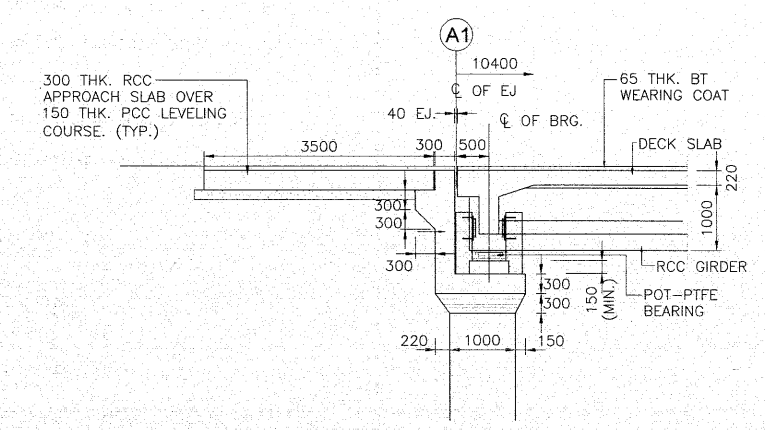

DETAIL - 'X'
(SCALE 1:75)

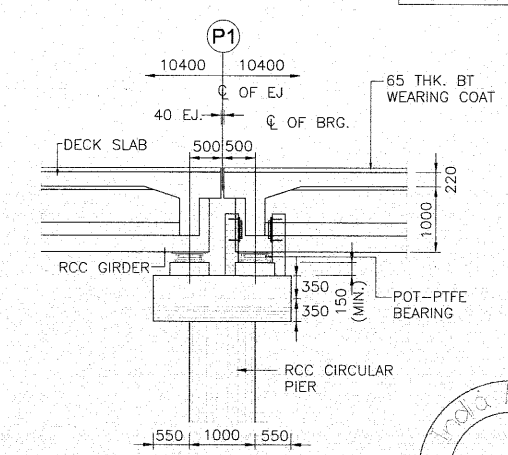

DETAIL - 'Y'
(SCALE 1:75)

LEGEND FOR BORE HOLE

SYMBOL	DESCRIPTION
	FILL - (greyish yellow clayey sandy silt/silty sand)
	LAYER-I - yellowish grey very soft silty clay mixed traces of sand
	LAYER-II - greyish yellow loose to medium dense silty sand
	LAYER-III - grey / yellowish brown dense to verydense silty sand

Rev.	Date	Description on Revisions
R2	23-03-2023	AS PER IE OBSERVATIONS
R1	DEC. 2020	LONGITUDINAL EXPANSION JOINT ADDED
R0	MARCH 2018	FIRST SUBMISSION

Revisions

Resident Engineer
STUP Consultants Pvt. Ltd
Nagaon, Assam

Acting Team Leader
STUP Consultants Pvt. Ltd.
Nagaon, Assam

CLIENT:- NATIONAL HIGHWAYS & INFRASTRUCTURE (Development Coporation Ltd)

AUTHORITY'S ENGINEER: STUP Consultants P. Ltd & Ayoleeza Consultants P. Ltd.

PROOF CHECKED CONSULTANT:- CETEST C E TESTING COMPANY PVT. LTD.

SAEFTY CONSULTANT:- Chaitanya Projects Consultancy Pvt. Ltd

AUTHORISED SIGNATORY | DATE | AUTHORISED SIGNATORY | DATE | AUTHORISED SIGNATORY | DATE

PROJECT: FOUR LANING OF NH-37 FROM RANGAGARA TO KALIABOR TINIALI (CH: 297.000 KM TO CH: 315.315 KM) IN NAGAON DISTRICT IN THE STATE OF ASSAM UNDER SARDP-NE, PHASE A ON EPC MODE

EPC CONTRACTOR:- SIMPLEX INFRASTRUCTURES LIMITED 27 SHAKESPEARE SARANI, KOLKATA-17 INDIA

CONSULTANTS:- AECOM
9th Floor, Infinity Tower C DLF Cyber City DLF Phase II, Gurgaon-122002, Haryana, India

R. BENIWAL	S P. SINGH	S. YADAV	S. RASTOGI
DRAWN	DESIGN	CHECKED BY	APPROVED BY

SCALE:- AS SHOWN

TITLE:- GENERAL ARRANGEMENT DRAWING FOR WIDENING OF EXISTING MINOR BRIDGE AT CH. 303+490 (SCH-B CH. 303+200) (AMONI RIVER)

DRAWING NO.:- AECOM-DELD15159-STR-DWG-MNB-303+200-GAD-02 (SH 2 OF 2) REV. R1

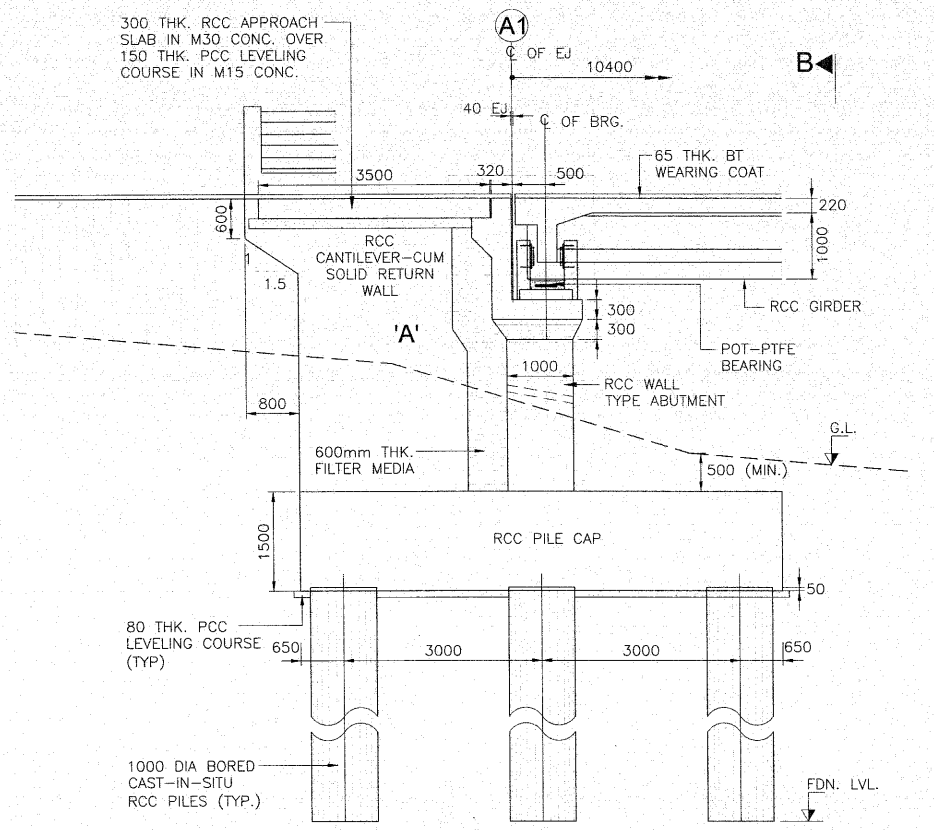

LONGITUDINAL ELEVATION
(SCALE 1:75)

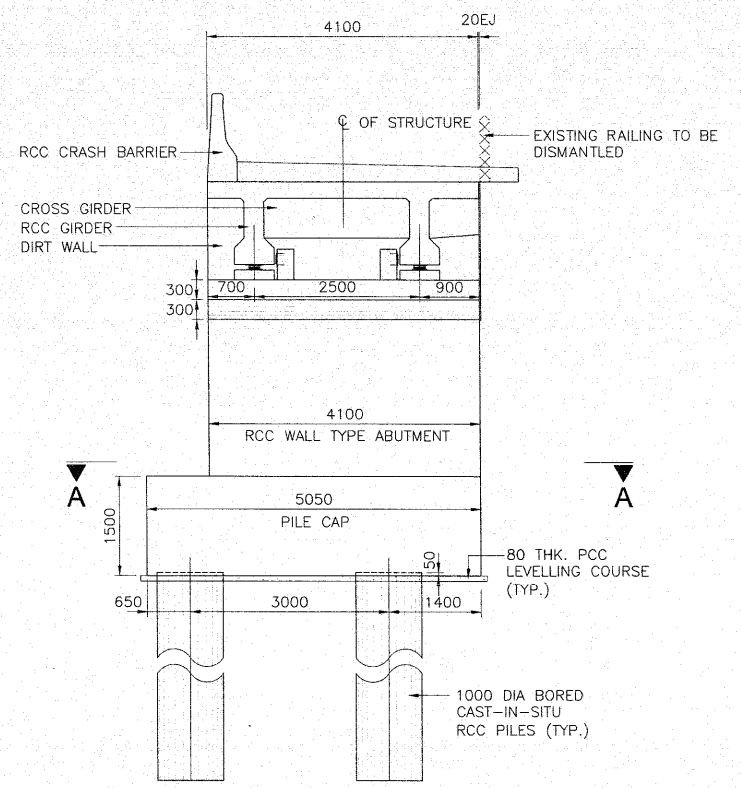

VIEW B-B
SCALE 1:75

NOTES:-

1. ALL DIMENSIONS ARE IN MILLIMETERS, LEVELS ARE IN METERS UNLESS OTHERWISE MENTIONED.
2. NO DIMENSION SHALL BE MEASURED FROM THE DRAWINGS. ONLY WRITTEN DIMENSIONS SHALL BE FOLLOWED.
3. THE REINFORCEMENT SHALL BE HYSD BARS OF GRADE DESIGNATION Fe 500D CONFORMING TO IS 1786-2008.
4. CONCRETE SHALL BE DESIGN MIX WITH A MINIMUM 28 DAYS CHARACTERISTIC CUBE STRENGTH FOR DIFFERENT ELEMENTS AS FOLLOWS:
   - a.RCC ABUT. & ABUT. CAP — M35
   - b.RCC PILE & PILE CAP — M35
   - c.RCC CRASH BARRIER — M40
   - d.PCC LEVELING COURSE — M15
   - e.RCC PEDESTALS — M40
   - f.RCC SEISMIC STOPPER — M35
5. CLEAR COVER TO OUTER STEEL SHALL BE AS FOLLOWS:-
   - a.RCC ABUT. STEM EARTH SIDE — 75MM
   - b.RCC ABUT. OUTER SIDE — 75MM
   - c.RCC ABUT. CAP — 40MM
   - d.RCC SEISMIC STOPPERS — 40MM
   - e.RCC PILE & PILE CAP — 75MM
   - f.RCC CRASH BARRIER — 40MM
6. 600MM THICK FILTER MEDIA SHALL BE PROVIDED BEHIND SOLID ABUTMENT WALL & RETURN WALLS.
7. ALL SOLID WALLS RETAINING THE EARTH SHALL BE PROVIDED WITH WEEP HOLES (100MM DIA AND SLOPE 1V:20H) STARTING 150MM ABOVE THE GROUND LEVEL AND SPACED 1000MM C/C BOTH HORIZONTALLY AND VERTICALLY IN STAGGERED MANNER.
8. PERMANENT STEEL LINER 6MM THK. SHALL BE PROVIDED UPTO MAX. SCOUR LEVEL IN PILES.
9. LAPPING OF REINFORCEMENT SHALL BE AVOIDED AS FAR AS POSSIBLE. IN CASE LAPPING OF BARS BECOME UNAVOIDABLE, NOT MORE THAN 50% OF BARS SHALL BE LAPPED AT A SECTION. LAP LENGTH SHALL BE PROVIDED AS PER CLAUSE 15.2.5 IRC:112-2011:
   - * 1.5x36ø (GRADE M35) FAVOURABLE CONDITION
   - * 1.5x1.43x36ø (GRADE M35) UNFAVOURABLE CONDITION
10. ANCHORAGE LENGTH SHALL BE AS PER CLAUSE 15.2.3 & 15.2.4, IRC:112-2011:
    - * 36ø (GRADE M35) FAVORABLE CONDITION
    - * 1.43x36ø (GRADE M35) UNFAVORABLE CONDITION

Resident Engineer
STUP Consultants Pvt. Ltd.
Nagaon, Assam

LEVEL DETAILS

LEVELS	FOR RHS WIDENING C/W	
	A1	A2
FRL	68.812	68.778
ABUTMENT CAP TOP LVL.	67.170	67.137
GL	65.694	65.604
PILE CAP TOP LVL.	64.825	64.825
FDN. LEVEL	37.622	37.622
ALL LEVELS SHALL BE VERIFIED AT SITE BEFORE EXECUTION OF WORK.		

REFERENCE DRAWINGS

1.) GENERAL ARRANGEMENT DRAWING:-
AECOM/STR/MNB RHS/303+200/GAD/01 (SH1 & 2)
2.) SUPERSTRUCTURE:-
AECOM/STR/MNB RHS/303+200/SUP/01 (SH1 TO 7)
3.) SUBSTRUCTURE:-
AECOM/STR/MNB RHS/303+200/SUB/01 (SH 1 TO 4)

LEGEND:-

- ◯ – BEARING IN PLAN
- ▬ – POT-CUM-PTFE BEARING IN ELEVATION
- ○ – JACK LOCATION IN PLAN
- ↑ – JACK LOCATION IN ELEVATION
- BRG – BEARING
- EJ – EXPANSION JOINT
- LVL – LEVEL
- ABUT – ABUTMENT
- FRL – FINISHED ROAD LEVEL
- FDN – FOUNDATION
- LVL – LEVEL
- C/W – CARRIAGEWAY
- BT – BITUMINOUS

Acting Team Leader
STUP Consultants Pvt. Ltd.
Nagaon, Assam

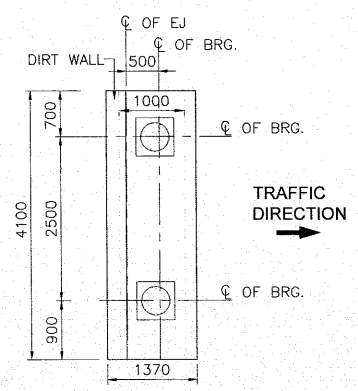

PLAN OF ABUTMENT CAP
(SCALE 1:75)

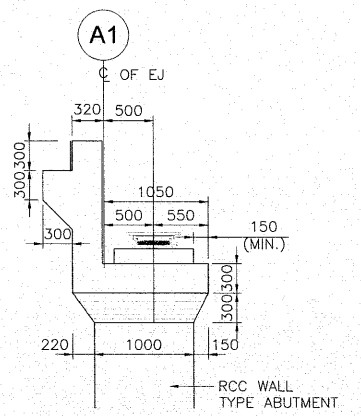

DETAIL-'A'
(SCALE : 1:50)

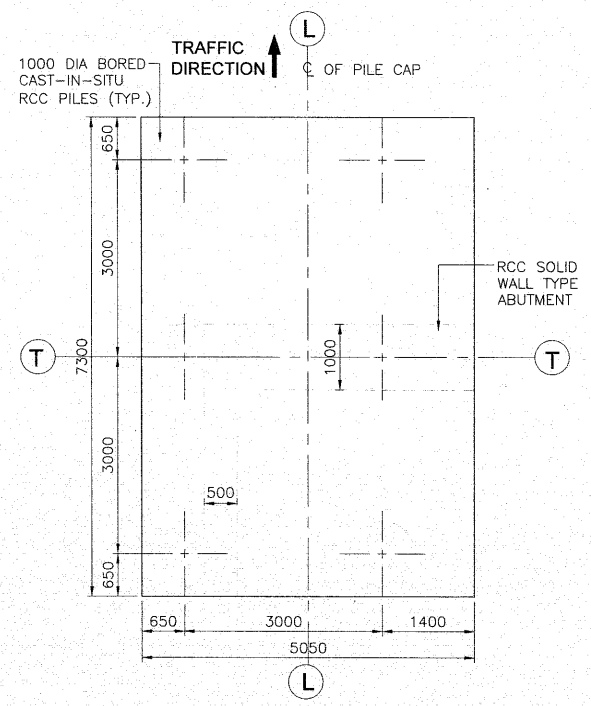

SECTION A-A
PLAN OF ABUTMENT, PILE CAP & PILES
(SCALE 1:75)

Rev.	Date	Description on Revisions
R1	23-03-2023	AS PER IE OBSERVATIONS
R0	NOV. 2018	INITIAL SUBMISSION

Revisions

CLIENT:- NATIONAL HIGHWAYS & INFRASTRUCTURE (Development Coporation Ltd)

AUTHORITY'S ENGINEER: STUP Consultants P. Ltd & Ayoleeza Consultants P. Ltd.

PROJECT CHECK CONSULTANT:- CETEST (C E TESTING COMPANY PVT. LTD.)

SAEFTY CONSULTANT:- Chaitanya Projects Consultancy Pvt. Ltd

PROJECT: FOUR LANING OF NH-37 FROM RANGAGARA TO KALIABOR TINIALI (CH: 297.000 KM TO CH: 315.315 KM) IN NAGAON DISTRICT IN THE STATE OF ASSAM UNDER SARDP-NE, PHASE A ON EPC MODE

EPC CONTRACTOR:- SIMPLEX INFRASTRUCTURES LIMITED, 116 BELVEDERE ROAD, KOLKATA-17, INDIA

CONSULTANTS:- AECOM, 9th Floor, Infinity Tower C DLF Cyber City, DLF Phase II, Gurgaon-122002, Haryana, India

DRAWN	DESIGN	CHECKED BY	APPROVED BY
R BENWAL	S P SINGH	S. YADAV	S RASTOGI

SCALE:- AS SHOWN

TITLE:- DIMENSION & REINFORCEMENT DETAILS OF RHS ABUTMENT & FOUNDATION FOR A1 & A2 FOR MINOR BRIDGE AT CH. 303+490 (SCH-B CH. 303+200)

DRAWING NO.:- AECOM-DELD15159-STR-DWG-MNB RHS-303+490-SUB-04 (SH1 OF 4) — REV. R0

AUTHORISED SIGNATORY | DATE | AUTHORISED SIGNATORY | DATE | AUTHORISED SIGNATORY | DATE

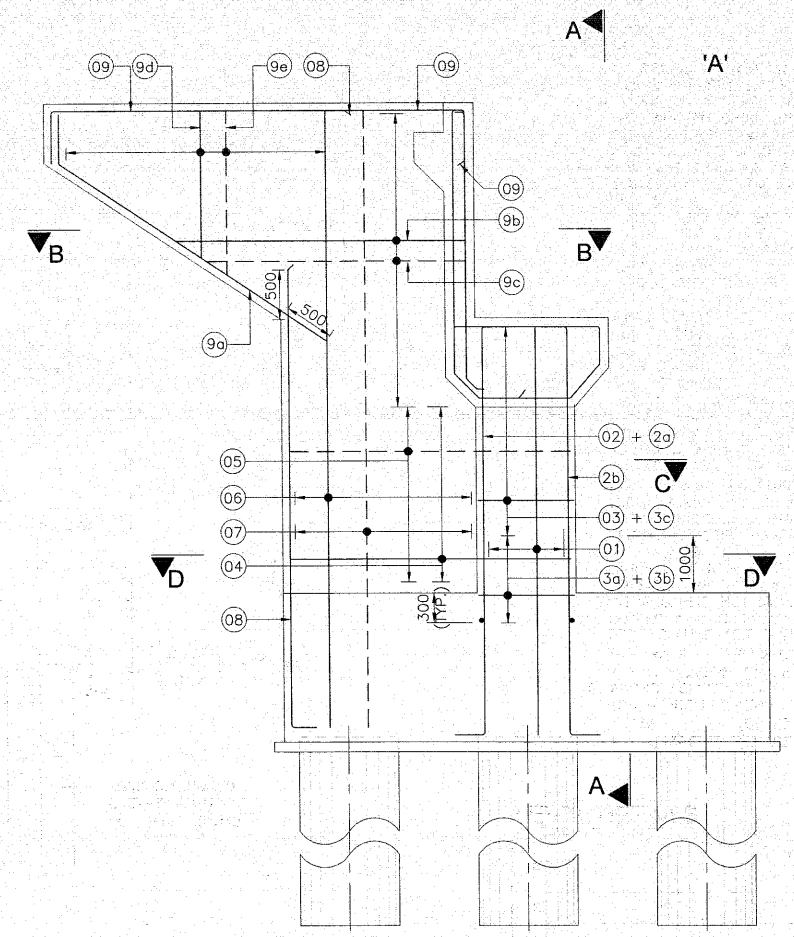

REINFORCEMENT DETAILS OF ABUTMENT

(SCALE 1:50)

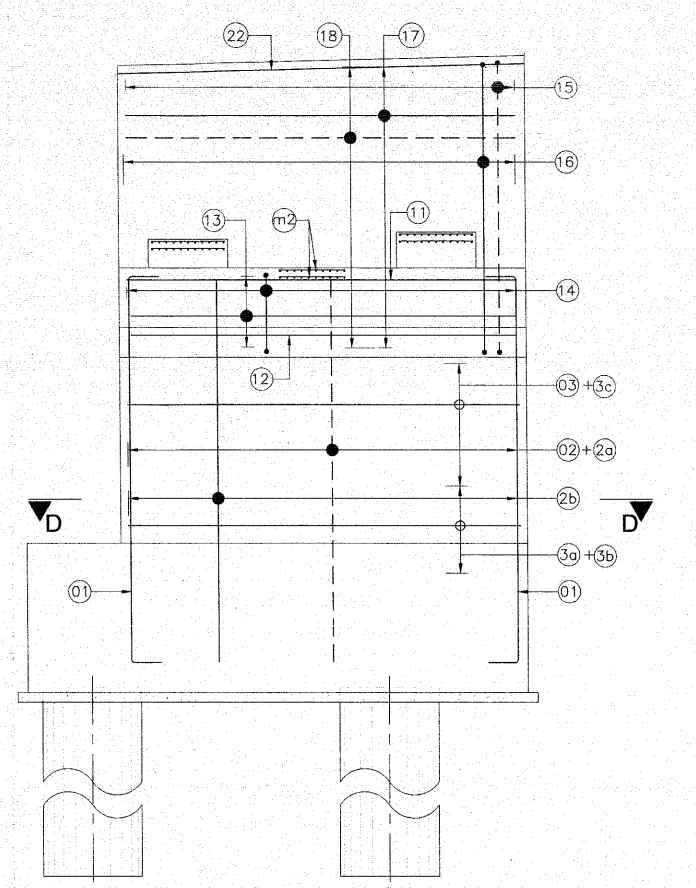

SECTION A-A

(CORBEL R/F OF ABUTMENT CAP NOT SHOWN FOR CLARITY)
(SCALE 1:50)

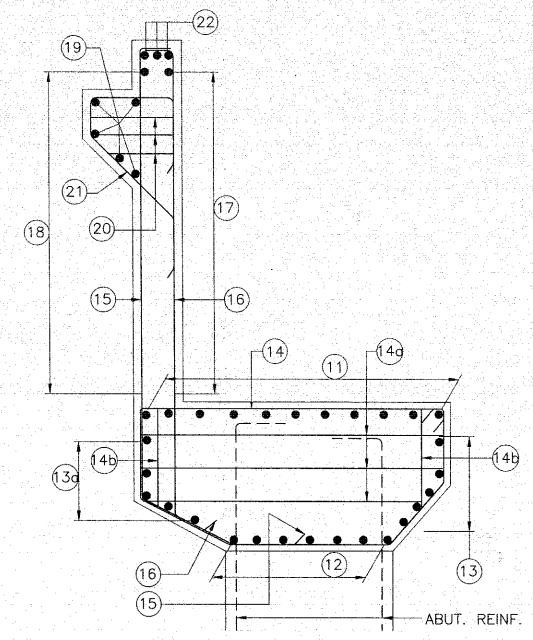

DETAIL - 'A'

(SCALE 1:30)

Resident Engineer
STUP Consultants Pvt. Ltd.
Nagaon, Assam

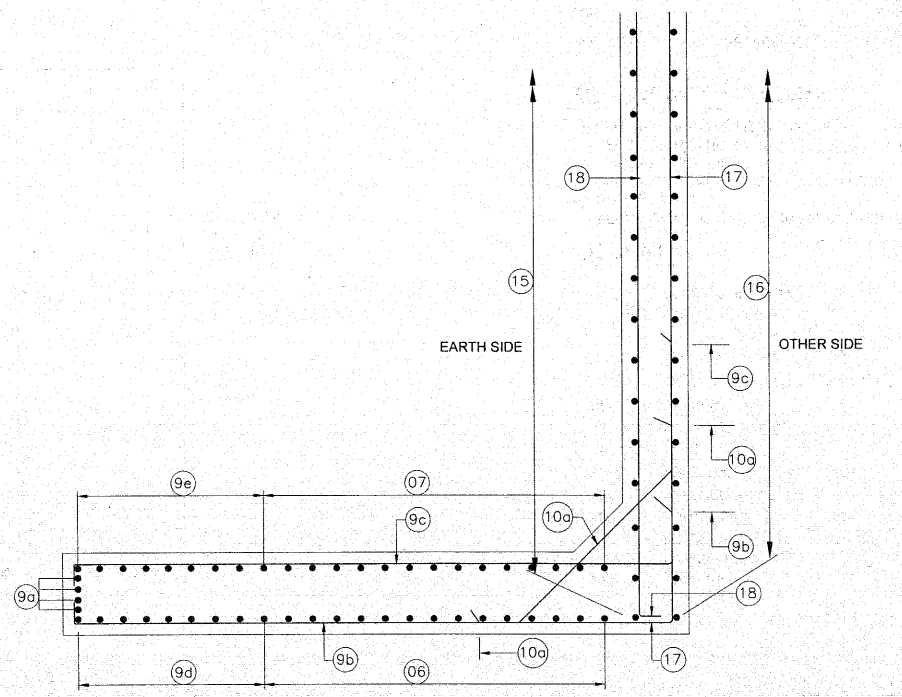

SECTION B-B

(SCALE 1:30)

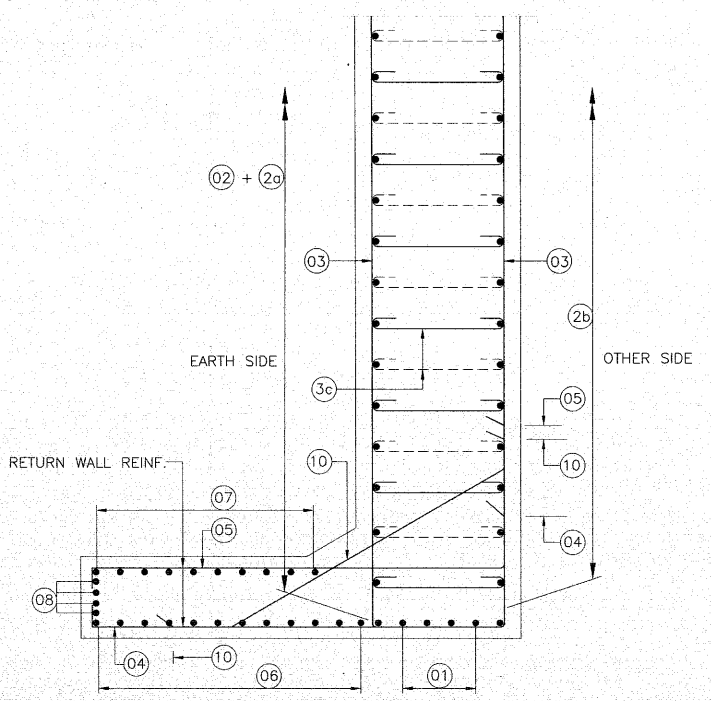

SECTION C-C

(SCALE 1:30)

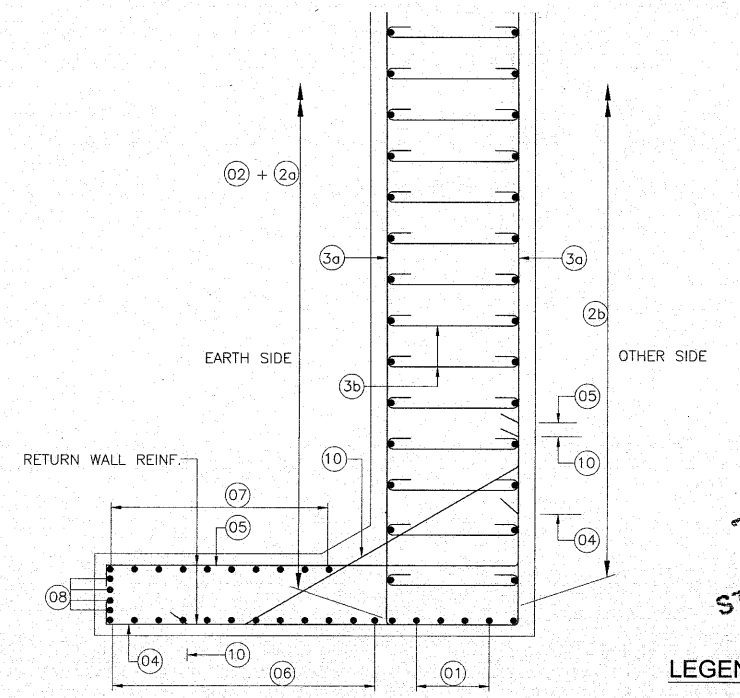

SECTION D-D

(SCALE 1:30)

Acting Team Leader
STUP Consultants Pvt. Ltd.
Nagaon, Assam

LEGEND:-

- - - - - - - EARTH SIDE
——————— OTHER SIDE

Rev.	Date	Description on Revisions
R1	23-03-2023	AS PER IE OBSERVATIONS
R0	NOV. 2018	INITIAL SUBMISSION

Revisions

CLIENT:- NATIONAL HIGHWAYS & INFRASTRUCTURE (Development Coporation Ltd)

AUTHORITY'S ENGINEER: STUP Consultants P. Ltd & Ayoleeza Consultants P. Ltd.

AUTHORISED SIGNATORY | DATE

PROJECT CONSULTANT:- CETEST C.E. TESTING COMPANY PVT. LTD.

AUTHORISED SIGNATORY | DATE

SAEFTY CONSULTANT:- Chaitanya Projects Consultancy Pvt. Ltd

AUTHORISED SIGNATORY | DATE

PROJECT: FOUR LANING OF NH-37 FROM RANGAGARA TO KALIABOR TINIALI (CH: 297.000 KM TO CH: 315.315 KM) IN NAGAON DISTRICT IN THE STATE OF ASSAM UNDER SARDP-NE, PHASE A ON EPC MODE

EPC CONTRACTOR:- SIMPLEX INFRASTRUCTURES LIMITED 21, SHAKESPEARE SARANI, KOLKATA-17, INDIA

CONSULTANTS:- AECOM
9th Floor, Infinity Tower C DLF Cyber City DLF Phase II, Gurgaon-122002, Haryana, India

DRAWN	DESIGN	CHECKED BY	APPROVED BY
R. BENWAL	S. P. SINGH	S. YADAV	S. RASTOGI

SCALE:- AS SHOWN

TITLE:- DIMENSION & REINFORCEMENT DETAILS OF RHS ABUTMENT & FOUNDATION FOR A1 & A2 FOR MINOR BRIDGE AT CH. 303+490 (SCH-B CH. 303+200)

DRAWING NO.:- AECOM-DELD15159-STR-DWG-MNB RHS-303+490-SUB-04 (SH2 OF 4) | REV. R0

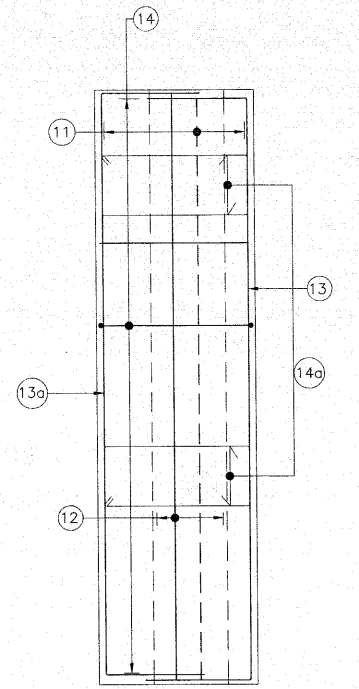

TOP PLAN OF ABUTMENT CAP

(SCALE 1:50)

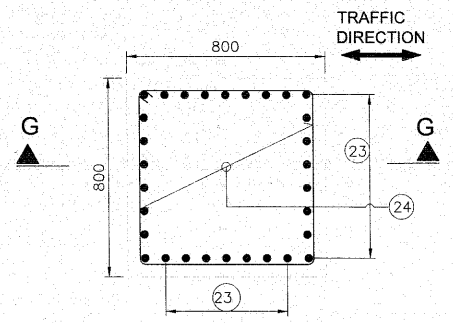

PLAN (SHOWING REINF.IN PEDESTAL FOR FREE BEARING)

(SCALE 1:20)

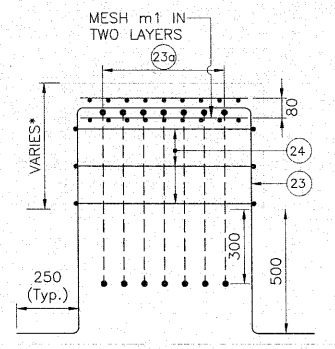

SECTION G-G

(*MINIMUM = 350 – HT. OF BRG.)
(SCALE: 1:20)

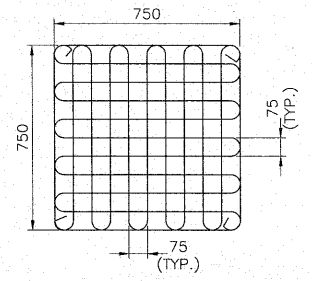

8 ϕ MESH (m1) FOR PEDESTAL

(UNDER BEARING LOCATION TWO LAYERS ONE AT 20MM & ANOTHER AT 80MM FROM TOP)
(SCALE: 1:20)

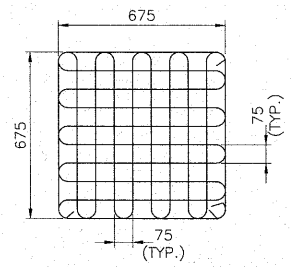

8 ϕ MESH (m2)

(UNDER JACK LOCATION TWO LAYERS ONE AT 20MM & ANOTHER AT 80MM FROM TOP)
(SCALE 1:20)

BAR SHAPE SCHEDULE

BAR MARK	DESCRIPTION	BAR SHAPE	REMARKS	
01	16ϕ–6 Nos x 2	300 300		ABUTMENT SHAFT
02	25ϕ–17 Nos.	300 300		
2a	25ϕ–17 Nos.	300 300		
2b	16ϕ–34 Nos.	300 300		
03	12ϕ @80 c/c			
3a	12 ϕ @80 c/c			
3b	10 ϕ 32Nos. HORIZONTALLY @80 c/c VERTICALLY	68 68		
3c	10 ϕ 16Nos. HORIZONTALLY @80 c/c VERTICALLY	68 68	STAGGERED ALONG HEIGHT	
04	12ϕ @170 c/c	200 200 1000		RETURN WALL
05	12ϕ @170 c/c	200 500 1000		
06	12ϕ @160 c/c	200 200		
07	12ϕ @160 c/c	200 200		
08	12ϕ–4 Nos.	200 200		
09	20ϕ–4 Nos.	400 500		
9a	12ϕ–4 Nos.	400		
9b	12ϕ @170 c/c	200 200		
9c	12ϕ @170 c/c	200 200		
9d	12ϕ @160 c/c	200 200		
9e	12ϕ @160 c/c	200 200		
10	10ϕ @170 c/c	300 300		
10a	10ϕ @170 c/c	300 300		
11	16ϕ–9 Nos.	300 500		ABUTMENT CAP
12	16ϕ–3 Nos.	300 500		
13	16ϕ–3 Nos.	A A	A=900 TO 500 VARIES	
13a	16ϕ–3 Nos.	A A	A=900 TO 500 VARIES	
14	16ϕ @110 c/c			
14a	12 Nos.–2L 10ϕ IN TRANS. DIR. @250 IN VERTICAL DIR.		IN TWO LAYERS	
14b	12 Nos.–2L 10ϕ IN TRANS. DIR. @250 IN TRAFFIC DIR.		IN ONE LAYERS	
15	16ϕ @200 c/c	150 500		DIRT WALL & BRACKET
16	12ϕ @200 c/c	150 200		
17	12ϕ @200 c/c	150 150		
18	12ϕ @200 c/c	150 150		
19	12ϕ–5 Nos.			
20	2L–10ϕ @400c/c	400 200		
21	12ϕ @200 c/c	400 300		
22	20ϕ–3 Nos.	300 300		
23	16ϕ@ 8Nos	250 250		PEDESTAL
23a	12ϕ@ 7Nos	150 150		
24	2L–10ϕ@150c/c VERTICALLY		IN 3 LAYER	

IMPORTANT NOTE:

REINFORCEMENT DETAILS TO BE REFERRED ONLY FROM TABLE

Resident
STUP Consultants Pvt. Ltd.
Nagaon, Assam

Acting Team Leader
STUP Consultants Pvt. Ltd.
Nagaon, Assam

Rev.	Date	Description on Revisions
R1	23-03-2023	AS PER IE OBSERVATIONS
R0	NOV. 2018	INITIAL SUBMISSION

Revisions

CLIENT:- NATIONAL HIGHWAYS & INFRASTRUCTURE (Development Coporation Ltd)

AUTHORITY'S ENGINEER:- STUP Consultants P. Ltd & Ayoleeza Consultants P. Ltd.

PROOF CHECK CONSULTANT:- C E TESTING COMPANY PVT. LTD.

SAEFTY CONSULTANT:- Chaitanya Projects Consultancy Pvt. Ltd

AUTHORISED SIGNATORY | DATE | AUTHORISED SIGNATORY | DATE | AUTHORISED SIGNATORY | DATE

PROJECT: FOUR LANING OF NH-37 FROM RANGAGARA TO KALIABOR TINIALI (CH: 297.000 KM TO CH: 315.315 KM) IN NAGAON DISTRICT IN THE STATE OF ASSAM UNDER SARDP-NE, PHASE A ON EPC MODE

EPC CONTRACTOR:- SIMPLEX INFRASTRUCTURES LIMITED, 27, SHAKESPEARE SARANI, KOLKATA-17, INDIA

CONSULTANTS:- AECOM, 9th Floor, Infinity Tower C DLF Cyber City, DLF Phase II, Gurgaon-122002, Haryana, India

DRAWN	DESIGN	CHECKED BY	APPROVED BY
R. BEHERAA	D. P. SINGH	S. YADAV	S. RASTOGI

SCALE:- AS SHOWN

TITLE:- DIMENSION & REINFORCEMENT DETAILS OF RHS ABUTMENT & FOUNDATION FOR A1 & A2 FOR MINOR BRIDGE AT CH. 303+490 (SCH-B CH. 303+200)

DRAWING NO.:- AECOM-DEL15159-STR-DWG-MNB RHS-303+490-SUB-04 (SH3 OF 4) | REV. R0

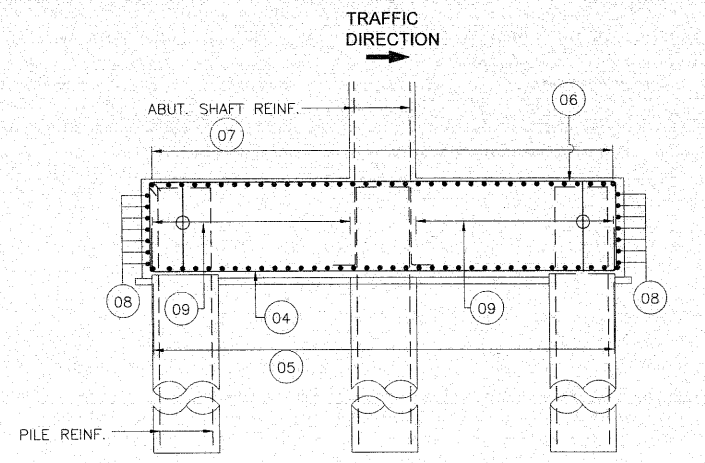

SECTION A-A
(SCALE 1:75)

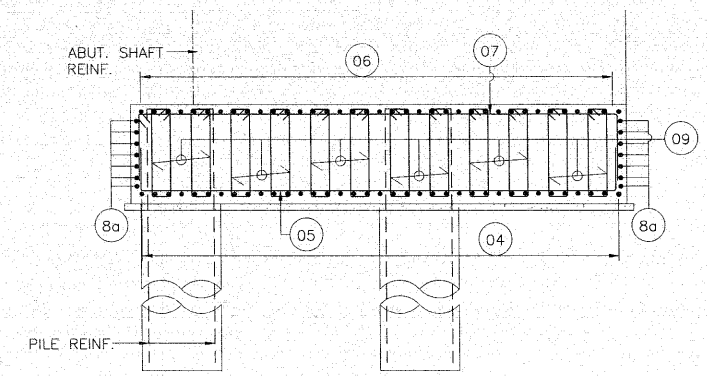

SECTION B-B
(SCALE 1:75)

BAR SHAPE SCHEDULE

BAR MRKD.	DESCRIPTION	BAR SHAPE	
01	32ϕ–11 Nos.	350	PILE
1a	32ϕ–11 Nos.	350	
02	12+12 @100c/c		
2a	12ϕ@100c/c		
03	NOT IN USE		
04	25ϕ@180c/c	1000 1000	PILE CAP
05	16ϕ@150c/c	1000 1000	
06	20ϕ@180c/c	1600 1600	
07	20ϕ@150c/c	1600 1600	
08	12ϕ@150c/c	300 300	
8a	12ϕ@180c/c	300 300	
09	2L–10ϕ 9Nos. IN TRANSV. DIRECTION @250c/c IN TRAFFIC DIRECTION		

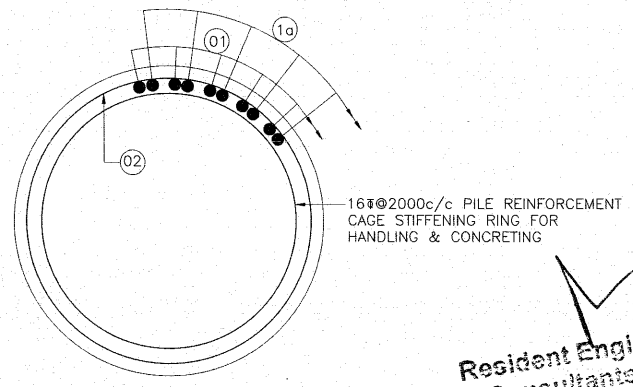

SECTION C-C
(SCALE 1:20)

IMPORTANT NOTE:
REINFORCEMENT DETAILS TO BE REFERRED ONLY FROM TABLE

LEGEND:-
- - - - - - BAR ON TOP FACE
——— BAR ON BOTTOM FACE

Ld = 1.43 x 40 x 32 x $2^{0.5}$ = 2589≈ 3000MM

Resident Engineer
STUP Consultants Pvt. Ltd.
Nagaon, Assam

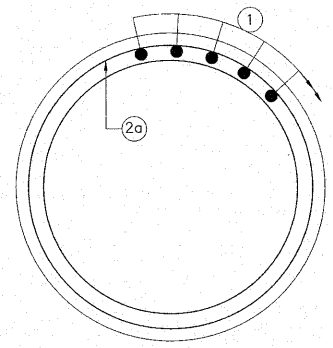

SECTION D-D
(SCALE 1:20)

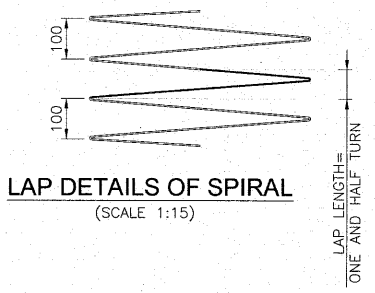

LAP DETAILS OF SPIRAL
(SCALE 1:15)

Acting Team Leader
STUP Consultants Pvt. Ltd.
Nagaon, Assam

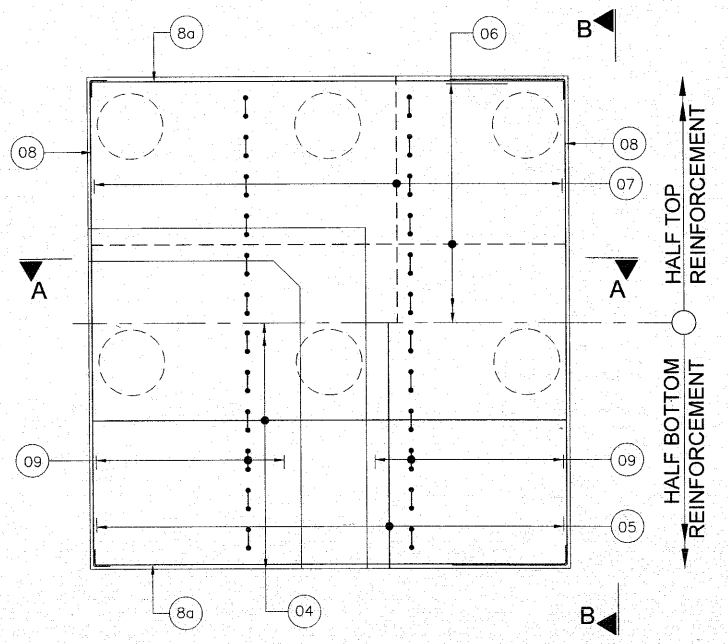

TOP PLAN OF PILE CAP
(SCALE 1:75)

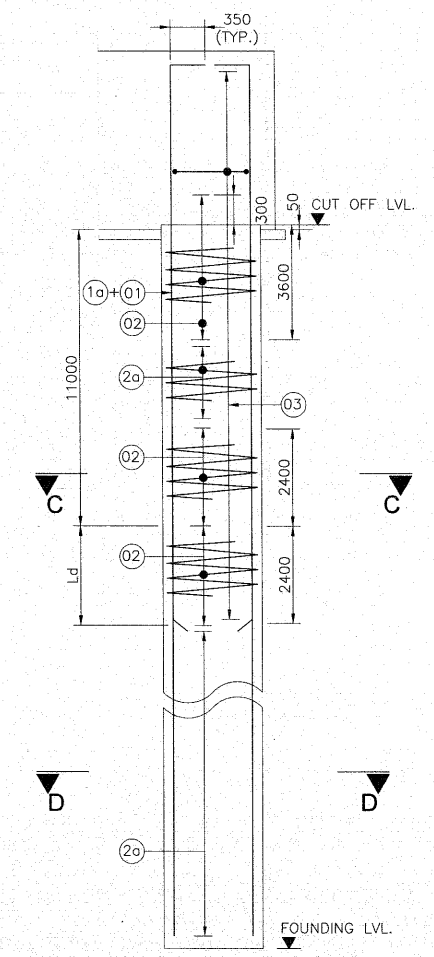

REINF. DETAILS OF PILE SHAFT
(SCALE 1:50)

LOCATION	LENGTH OF PILE (m)	DESIGN VERTICAL LOAD (t)		VERTICAL LOAD CARRYING CAPACITY (t) (AS PER GEOTECH REPORT)		LATERAL DEFLECTION OF PILE AT SCOUR LEVEL (mm)	PERMISSIBLE LATERAL DEFLECTION OF PILE AT SCOUR LEVEL (mm)
		NORMAL	SEISMIC	NORMAL	SEISMIC		
A1 & A2	25.7	83	86	540	675	5.37	10.0

AECOM India Private Limited Gurgaon

Rev.	Date	Description on Revisions
R1	23-03-2023	AS PER IE OBSERVATIONS
R0	NOV. 2018	INITIAL SUBMISSION

Revisions

CLIENT:- NATIONAL HIGHWAYS & INFRASTRUCTURE (Development Coporation Ltd)

AUTHORITY'S ENGINEER: STUP Consultants P. Ltd & Ayoleeza Consultants P. Ltd.
AUTHORISED SIGNATORY | DATE

PROJECT CONSULTANT:- C.E. TESTING COMPANY PVT. LTD.
AUTHORISED SIGNATORY | DATE

SAEFTY CONSULTANT:- Chaitanya Projects Consultancy Pvt. Ltd
AUTHORISED SIGNATORY | DATE

PROJECT: FOUR LANING OF NH-37 FROM RANGAGARA TO KALIABOR TINIALI (CH: 297.000 KM TO CH: 315.315 KM) IN NAGAON DISTRICT IN THE STATE OF ASSAM UNDER SARDP-NE, PHASE A ON EPC MODE

EPC CONTRACTOR:- SIMPLEX INFRASTRUCTURES LIMITED, 27, SHAKESPEARE SARANI, KOLKATA-17, INDIA

CONSULTANTS:- AECOM, 9th Floor, Infinity Tower C DLF Cyber City DLF Phase II, Gurgaon-122002, Haryana, India

DRAWN	DESIGN	CHECKED BY	APPROVED BY
R. BENWAL	S. P. SINGH	S. YADAV	S. PASTOGI

SCALE:- AS SHOWN

TITLE:- DIMENSION & REINFORCEMENT DETAILS OF RHS ABUTMENT & FOUNDATION FOR A1 & A2 FOR MINOR BRIDGE AT CH. 303+490 (SCH-B CH. 303+200)

DRAWING NO.:- AECOM-DELD15159-STR-DWG-MNB RHS-303+490-SUB-04 (SH4 OF 4) REV. R0

Simplex Infrastructures Ltd

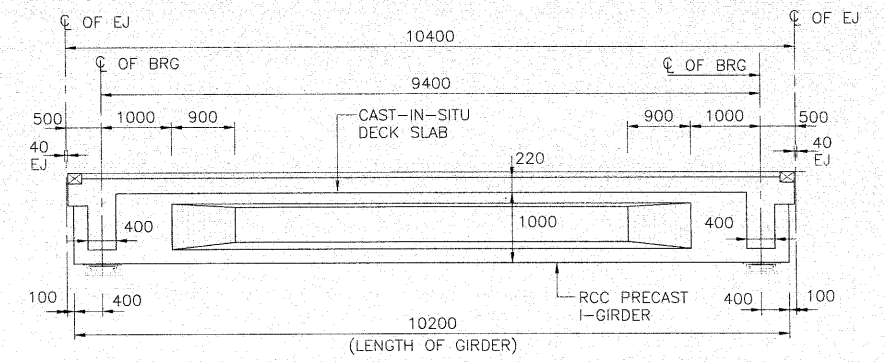

ELEVATION A-A
SCALE 1:75

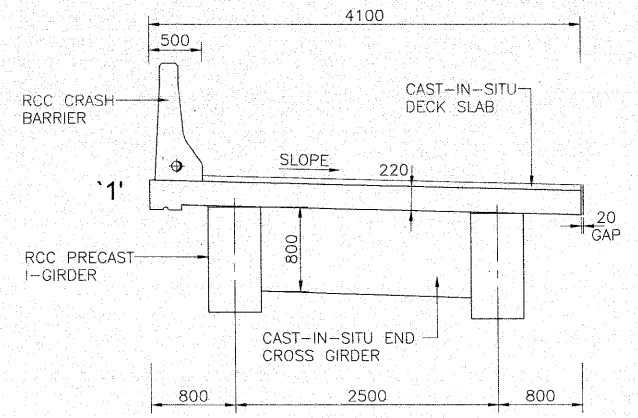

SECTION B-B
(SCALE 1:50)

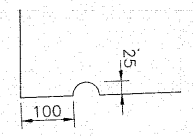

DETAIL-`1'
SHOWING DRIP COURSE
(SCALE 1:10)

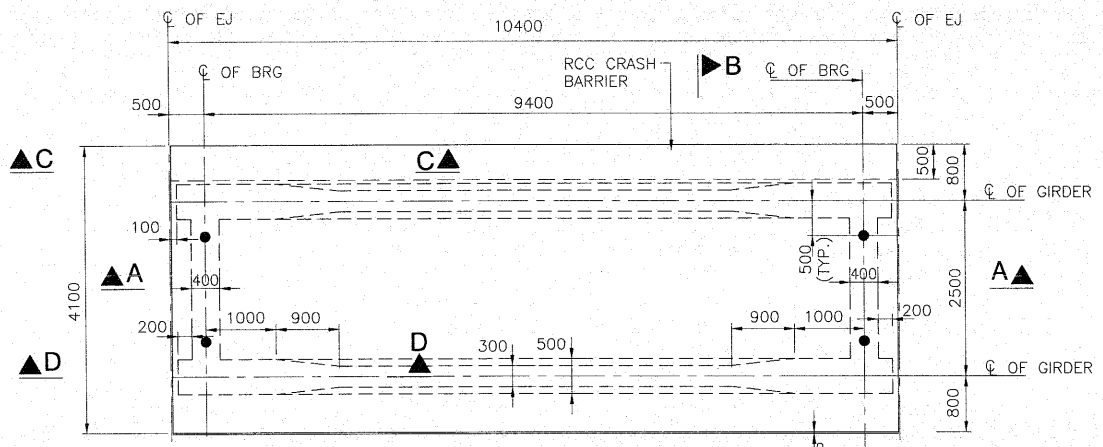

SECTIONAL PLAN
SCALE 1:75

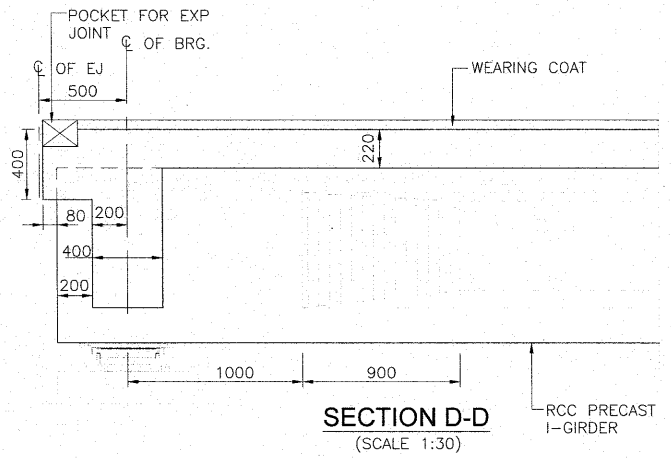

SECTION D-D
(SCALE 1:30)

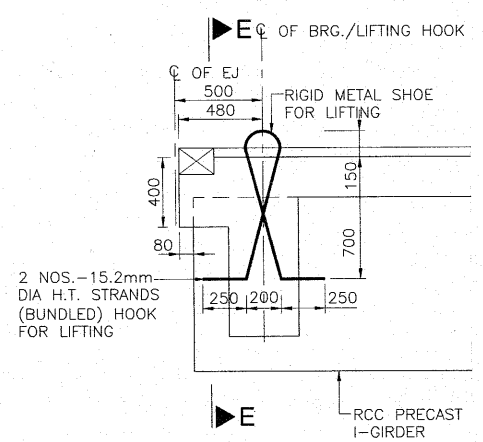

TYPICAL DETAIL OF LIFTING OF GIRDER AT EACH END OF GIRDER
(SCALE 1:30)

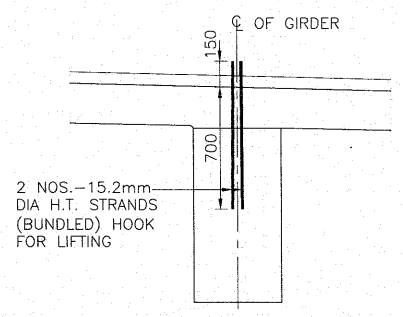

SECTION E-E
(SCALE 1:30)

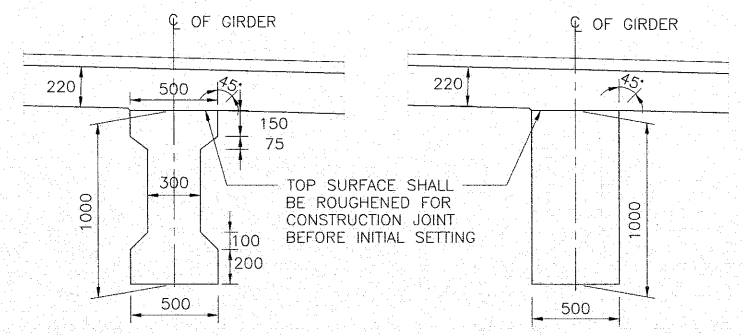

MID SECTION

SUPPORT SECTION

CROSS SECTION OF RCC PRECAST I-GIRDER
(SCALE 1:30)

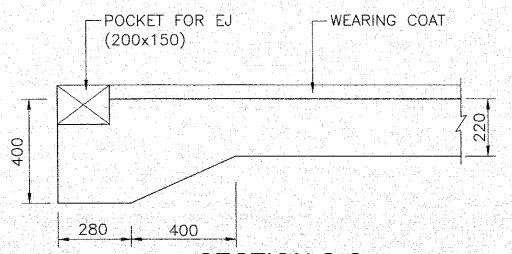

SECTION C-C
(SCALE 1:20)

NOTES:-

1. ALL DIMENSIONS ARE IN MILLIMETERS, LEVELS ARE IN METERS UNLESS OTHERWISE MENTIONED.
2. NO DIMENSIONS SHALL BE MEASURED FROM THE DRAWINGS. ONLY WRITTEN DIMENSIONS SHALL BE FOLLOWED.
3. CONCRETE SHALL BE DESIGN MIX WITH A MINIMUM 28 DAYS CHARACTERISTIC CUBE STRENGTH FOR DIFFERENT ELEMENTS AS FOLLOWS:
   a. RCC PRECAST I-GIRDER – M35
   b. RCC CAST-IN-SITU DECK SLAB – M35
   c. RCC CAST-IN-SITU END CROSS GIRDER – M35
4. SUITABLE HOLES SHALL BE LEFT IN PRECAST GIRDER FOR SUPPORTING THE DECK SLAB SHUTTERING.
5. THE REINFORCEMENT OF CRASH BARRIER SHALL BE PROPERLY ANCHORED IN THE DECK SLAB BEFORE CASTING THE DECK SLAB.
6. BEAMS SHALL BE KEPT UPRIGHT AT ALL TIMES AND TO BE CLEARLY MARKED INDICATING SPAN LOCATION & RESPECTIVE ENDS BEFORE REMOVAL FROM CASTING BED.
7. TOP SURFACE OF PRECAST BEAM & VERTICAL EDGES OF END TO BE LEFT ROUGHENED FOR EFFECTIVE BONDING.
8. THE REINFORCING STEEL SHALL BE HYSD BARS (GRADE DESIGNATION Fe-500D) CONFORMING TO IS:1786-2008.
9. LAPPING OF REINFORCEMENT SHALL BE AVOIDED AS FAR AS POSSIBLE. IN CASE LAPPING OF BARS BECOME UNAVOIDABLE, LAP LENGTH SHALL BE PROVIDED AS PER CLAUSE 15.2.5 IRC:112-2011:-
   * $\alpha_1 x 36\phi$ (GRADE M35) FAVOURABLE CONDITION
   * $\alpha_1 x 1.43 x 36\phi$ (GRADE M35) UNFAVOURABLE CONDITION

PERCENTAGE OF LAPPED BARS RELATIVE TO TOTAL CROSS-SECTIONAL AREA	<25%	33%	50%	>50%
α_1	1	1.15	1.4	1.5

10. ANCHORAGE LENGTH SHALL BE AS PER CLAUSE 15.2.3 & 15.2.4, IRC:112-2011:-
   * 36ϕ (GRADE M35) FAVORABLE CONDITION
   * $1.43x36\phi$ (GRADE M35) UNFAVORABLE CONDITION

CONSTRUCTION & SEQUENCE OF GIRDERS

1. AT '0'TH DAY, GIRDER SHALL BE CASTED ON CASTING BED.
2. AFTER 28 DAYS WHEN CONCRETE WILL ATTEND A STRENGTH OF 35MPA, GIRDERS SHALL THEN BE PLACED ON TEMPORARY SUPPORTS ON PIER CAP/ABUTMENT CAP.
3. PERMANENT BEARINGS SHALL BE INSTALLED ON PEDESTALS.
4. STEEL WEDGE SHALL BE FIXED UNDER GIRDER AT BEARING LOCATION AS PER RELEVANT WEDGE DETAILS.
5. TEMPORARY SUPPORT SHALL BE REMOVED SO THAT GIRDER PAD BE PLACED OVER PERMANENT BEARINGS.
6. DECK SLAB SHALL BE CAST AFTER 28 DAYS OF CASTING OF GIRDER.
7. CRASH BARRIER/RAILING SHALL BE ERECTED/CAST 3 DAYS AFTER CASTING THE DECK SLAB. THE DECK CANTILEVER SHUTTERING MAY BE OPENED AFTER THE DECK SLAB ATTAINS A STRENGTH OF 25MPa.
8. WEARING COAT MAY BE LAID AFTER REMOVAL OF SHUTTERING OF DECK 14 DAYS AFTER CASTING DECK SLAB OR WHEN DECK ATTAINS CONCRETE CUBE STRENGTH OF 35MPa.

Resident Engineer
STUP Consultants Pvt. Ltd.
Nagaon, Assam

REFERENCE DRAWINGS

1.) GENERAL ARRANGEMENT DRAWING:-
AECOM-DELD15159-DD-DWG-MNB-303+200-GAD-01

2.) SUBSTRUCTURE:-
AECOM-DELD15159-DD-DWG-MNB-303+200-SUB-01

LEGEND:-

FRL – FINISHED ROAD LEVEL
CC – CEMENT CONCRETE
LHS – LEFT HAND SIDE
RHS – RIGHT HAND SIDE
EJ – EXPANSION JOINT

CAST-IN-SITU PORTION
PRECAST PORTION
BOTTOM FACE
TOP FACE

Acting Team Leader
STUP Consultants Pvt. Ltd.
Nagaon, Assam

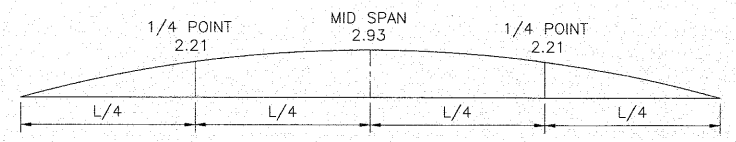

PRE-CAMBER IN GIRDER
SCALE 1:100

AECOM India Private Limited Gurgaon

Rev.	Date	Description on Revisions
R0	13-12-2022	FIRST SUBMISSION

Revisions

CLIENT:- NATIONAL HIGHWAYS & INFRASTRUCTURE (Development Coporation Ltd)

AUTHORITY'S ENGINEER: STUP Consultants P. Ltd & Ayoleeza Consultants P. Ltd.

PROJECT CONSULTANT:- CETEST Engineering Consultants, CE TESTING COMPANY PVT. LTD.

SAEFTY CONSULTANT:- Chaitanya Projects Consultancy Pvt. Ltd

PROJECT: FOUR LANING OF NH-37 FROM RANGAGARA TO KALIABOR TINIALI (CH: 297.000 KM TO CH: 315.315 KM) IN NAGAON DISTRICT IN THE STATE OF ASSAM UNDER SARDP-NE, PHASE A ON EPC MODE

EPC CONTRACTOR:- SIMPLEX INFRASTRUCTURES LIMITED, 27, DIAMOND HARBOUR ROAD, KOLKATA-27, INDIA

CONSULTANTS:- AECOM, 9th Floor, Infinity Tower C DLF Cyber City, DLF Phase II, Gurgaon-122002, Haryana, India

AUTHORISED SIGNATORY	DATE	AUTHORISED SIGNATORY	DATE	AUTHORISED SIGNATORY	DATE

MANISH VERMA	PRAMOD KIRAR	S P SINGH	S. RASTOGI
DRAWN	DESIGN	CHECKED BY	APPROVED BY

SCALE:- AS SHOWN

TITLE:- DIMENSION & REINFORCEMENT DETAILS OF RCC GIRDER OF SPAN 10.4M FOR MINOR BRIDGE AT CH. 303+490 (SCH-B CH. 303+200) (DIMENSION DETAILS)

DRAWING NO.:- AECOM-DELD15159-DD-DWG-MNB-303+200-SUP-02 (SH 1 OF 4) REV. R0

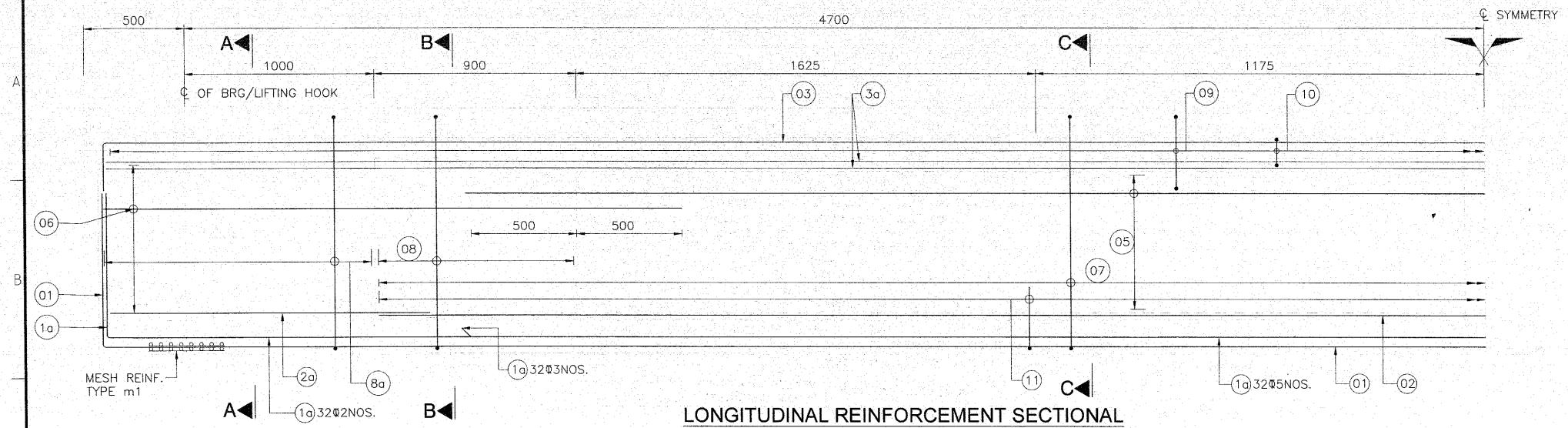

LONGITUDINAL REINFORCEMENT SECTIONAL
(SCALE 1 :30)

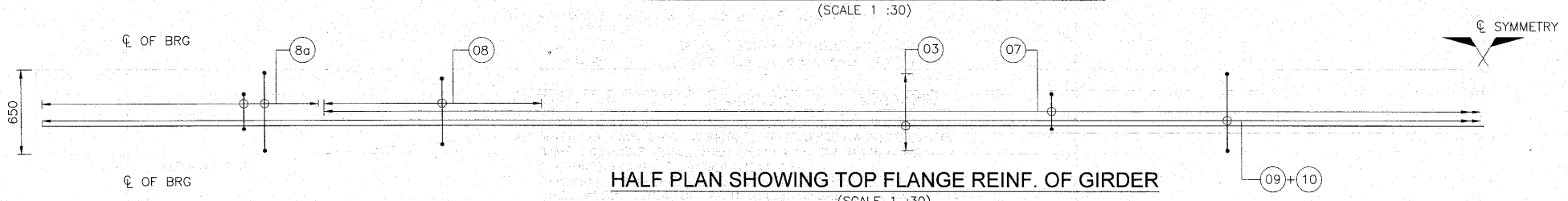

HALF PLAN SHOWING TOP FLANGE REINF. OF GIRDER
(SCALE 1 :30)

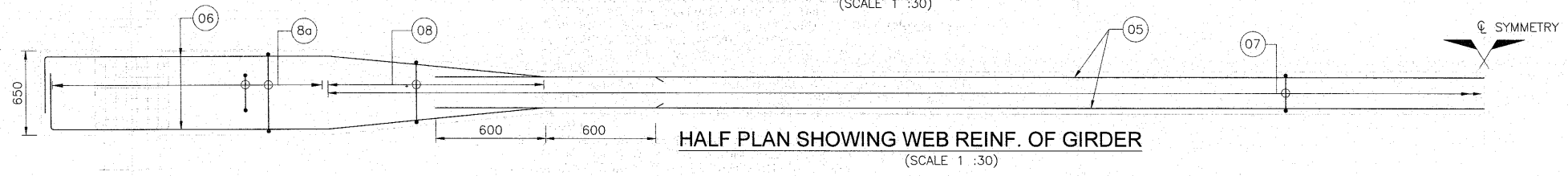

HALF PLAN SHOWING WEB REINF. OF GIRDER
(SCALE 1 :30)

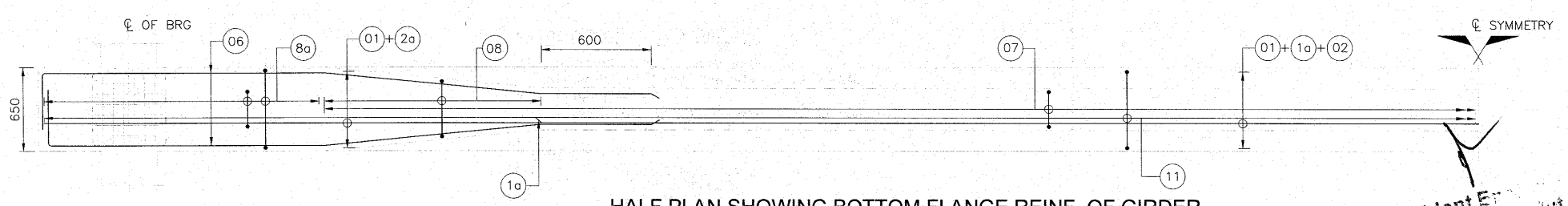

HALF PLAN SHOWING BOTTOM FLANGE REINF. OF GIRDER
(SCALE 1 :30)

Resident Engineer
STUP Consultants Pvt. Ltd.
Nagaon, Assam

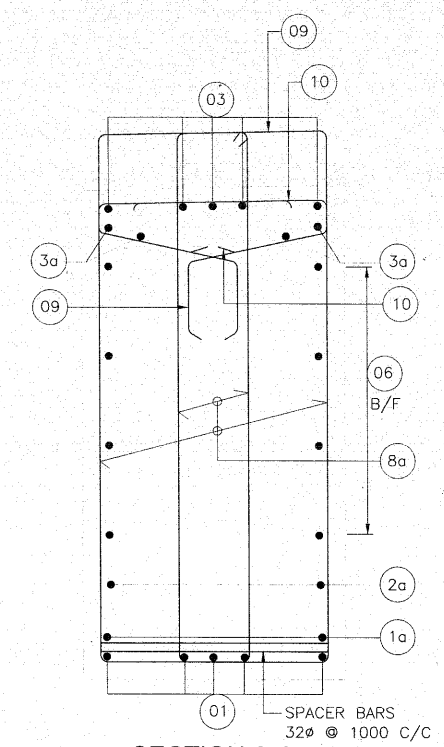

SECTION A-A
(SCALE 1:15)

SCHEDULE OF REINFORCEMENT

BAR MARK	SHAPE	DIA	SPACING/ NOS.	REMARKS
01	900	32 Φ	5 Nos.	
1a	900	32 Φ	5 Nos.	
02		10 Φ	1X2 Nos.	
2a	500	10 Φ	1X2 Nos.	
03	900	10 Φ	5 Nos.	
3a		10 Φ	4 Nos.	
04	NOT IN USE			
05		10 Φ	2X4 Nos.	
06	450	10 Φ	2X4 Nos.	
07	2 LEGGED	12 Φ	120c/c	
08	2 LEGGED VARIES	12 Φ	120c/c	
8a	4 LEGGED	12 Φ	120c/c	
09	150	10 Φ	120c/c	
10		10 Φ	120c/c	
11	150	10 Φ	120c/c	

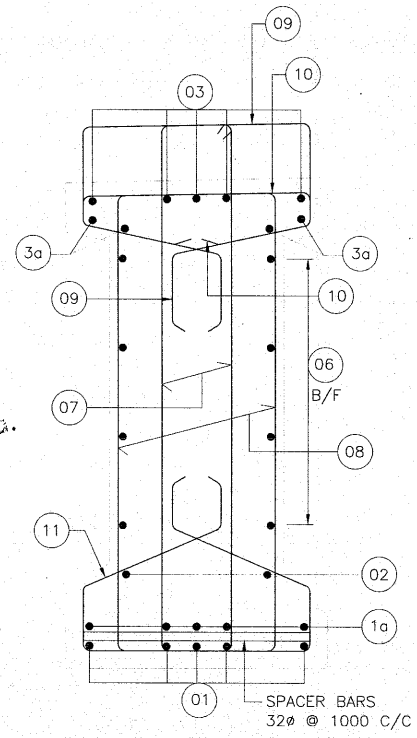

SECTION B-B
(SCALE 1:15)

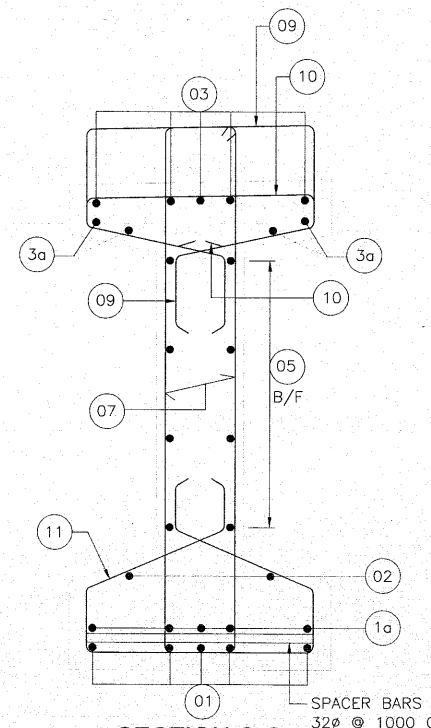

SECTION C-C
(SCALE 1:15)

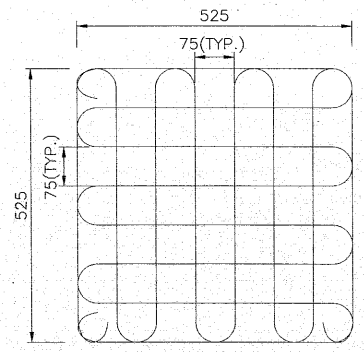

8 Φ MESH TYPE-m1
(IN TWO LAYERS ABOVE BEARING)
(SCALE: 1:10)

NOTES:-

1. ALL DIMENSIONS ARE IN MILLIMETERS, LEVELS ARE IN METERS UNLESS OTHERWISE MENTIONED.
2. NO DIMENSIONS SHALL BE MEASURED FROM THE DRAWINGS. ONLY WRITTEN DIMENSIONS SHALL BE FOLLOWED.
3. MESH TYPE 'm1' SHALL BE PROVIDED IN LONGITUDINAL GIRDER ABOVE BEARING LOCATION IN TWO LAYERS, AT 20mm AND AT 80mm FROM OUTER FACE OF GIRDER.
4. SPLICES OF REINF. SHALL BE DONE BY LAPS OF BARS WITH STRAIGHT ENDS OR WITH END HOOKS OR WELDING OR MECHANICAL DEVICES AS PER CLAUSE NO 15.2.5 OF IRC:112-2011
5. THE REINFORCEMENT OF CRASH BARRIER SHALL BE PROPERLY ANCHORED IN THE DECK SLAB BEFORE CASTING THE DECK SLAB.
6. MESH REINF. SHALL BE MS BARS (GRADE DESIGNATION S250) CONFORMING TO IS:432 PART-1 MILD STEEL.

Acting Team Leader
STUP Consultants Pvt. Ltd.
Nagaon, Assam

AECOM India Private Limited Gurgaon

Rev.	Date	Description on Revisions
R0	13-12-2022	FIRST SUBMISSION

Revisions

CLIENT:- NATIONAL HIGHWAYS & INFRASTRUCTURE (Development Coporation Ltd)

AUTHORITY'S ENGINEER: STUP Consultants P. Ltd & Ayoleeza Consultants P. Ltd.

RECOGNIZED MESH CONSULTANT:- CETEST Engineering Consultants — C.E TESTING COMPANY PVT. LTD.

SAEFTY CONSULTANT:- Chaitanya Projects Consultancy Pvt. Ltd

AUTHORISED SIGNATORY | DATE | AUTHORISED SIGNATORY | DATE | AUTHORISED SIGNATORY | DATE

PROJECT: FOUR LANING OF NH-37 FROM RANGAGARA TO KALIABOR TINIALI (CH: 297.000 KM TO CH: 315.315 KM) IN NAGAON DISTRICT IN THE STATE OF ASSAM UNDER SARDP-NE, PHASE A ON EPC MODE

EPC CONTRACTOR: SIMPLEX INFRASTRUCTURES LIMITED, 27, SHAKESPEARE SARANI, KOLKATA-71 INDIA

CONSULTANTS:- AECOM, 9th Floor, Infinity Tower C DLF Cyber City, DLF Phase II, Gurgaon-122002, Haryana, India

DRAWN	DESIGN	CHECKED BY	APPROVED BY
MANISH VERMA	PRAMOD KIRAR	S P SINGH	S. RASTOGI

SCALE:- AS SHOWN

TITLE:- DIMENSION & REINFORCEMENT DETAILS OF RCC GIRDER OF SPAN 10.4M FOR MINOR BRIDGE AT CH. 303+490 (SCH-B CH. 303+200) (LONGITUDINAL GIRDER MIN. REINF.)

DRAWING NO.:- AECOM-DELD15159-DD-DWG-MNB-303+200-SUP-02 (SH 2 OF 4) | REV. R0

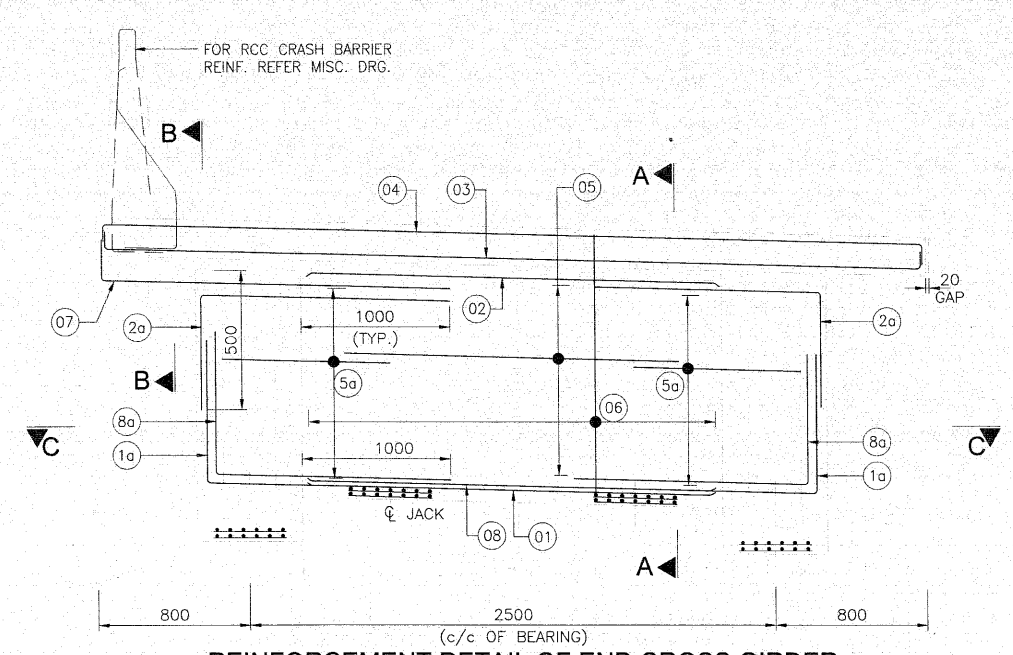

REINFORCEMENT DETAIL OF END CROSS GIRDER

(SCALE 1:30)

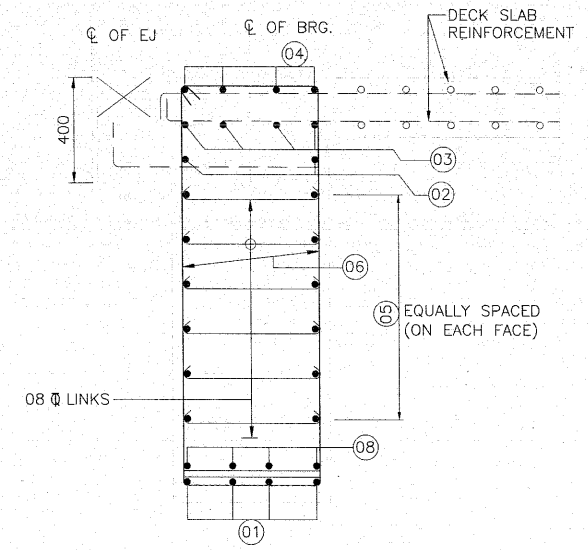

SECTION A-A

(SCALE 1:20)

SCHEDULE OF REINFORCEMENT

BAR MARK	SHAPE	BAR DIA & SPACING/Nos.
01		10Φ-4 Nos.
1a	650	10Φ-4x2 Nos.
02		10Φ-2 Nos.
2a	650	10Φ-2 Nos.
03	150	10Φ-4 Nos.
04	150	10Φ-4 Nos.
05		10Φ-1x7 Nos.
5a		10Φ-2x7 Nos.
06		2L-10Φ@200 C/C
07	200	10Φ-2x2 Nos.
08		10Φ-4 Nos.
8a		10Φ-4x2 Nos.

Resident Engineer
STUP Consultants Pvt. Ltd.
Nagaon

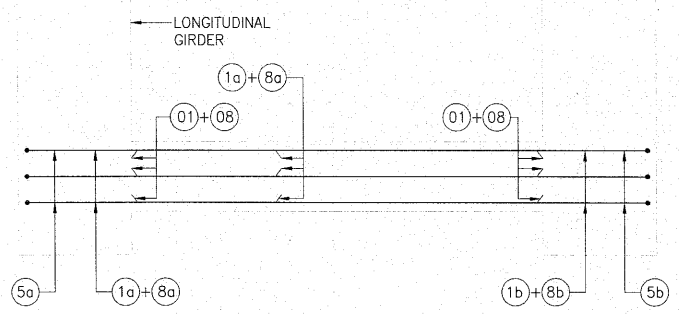

PLAN OF END CROSS GIRDER AT - CC

(SCALE 1:30)

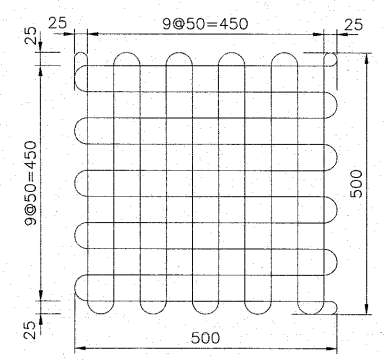

8Φ MESH TYPE-A

(MESH TO BE PLACE UNDER JACK)

(SCALE: 1:10)

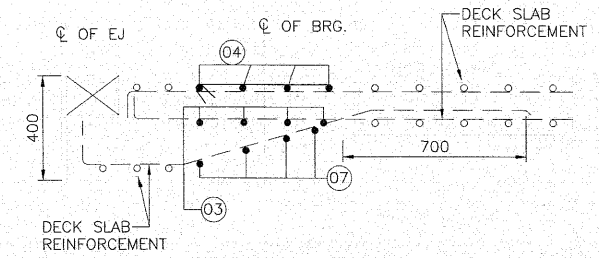

SECTION B-B

(SCALE 1:20)

Acting Team Leader
STUP Consultants Pvt. Ltd.
Nagaon, Assam

Rev.	Date	Description on Revisions
R0	13-12-2022	FIRST SUBMISSION

Revisions

CLIENT:- NATIONAL HIGHWAYS & INFRASTRUCTURE (Development Coporation Ltd)

AUTHORITY'S ENGINEER: STUP Consultants P. Ltd & Ayoleeza Consultants P. Ltd.

QUALITY CONSULTANT:- CETEST C.E.TESTING COMPANY PVT. LTD.

SAEFTY CONSULTANT:- Chaitanya Projects Consultancy Pvt. Ltd

AUTHORISED SIGNATORY | DATE | AUTHORISED SIGNATORY | DATE | AUTHORISED SIGNATORY | DATE

PROJECT: FOUR LANING OF NH-37 FROM RANGAGARA TO KALIABOR TINIALI (CH: 297.000 KM TO CH: 315.315 KM) IN NAGAON DISTRICT IN THE STATE OF ASSAM UNDER SARDP-NE, PHASE A ON EPC MODE

EPC CONTRACTOR:- SIMPLEX INFRASTRUCTURES LIMITED, 27, SHAKESPEARE SARANI, KOLKATA-71, INDIA

CONSULTANTS:- AECOM, 9th Floor, Infinity Tower C DLF Cyber City, DLF Phase II, Gurgaon-122002, Haryana, India

MANISH VERMA	PRAMOD KIRAR	S. P. SINGH	S. RASTOGI
DRAWN	DESIGN	CHECKED BY	APPROVED BY

SCALE:- AS SHOWN

TITLE:- DIMENSION & REINFORCEMENT DETAILS OF RCC GIRDER OF SPAN 10.4M FOR MINOR BRIDGE AT CH. 303+490 (SCH-B CH. 303+200) (END-CROSS-GIRDER)

DRAWING NO.:- AECOM-DELD15159-DD-DWG-MNB-303+200-SUP-02 (SH 3 OF 4) REV. R0

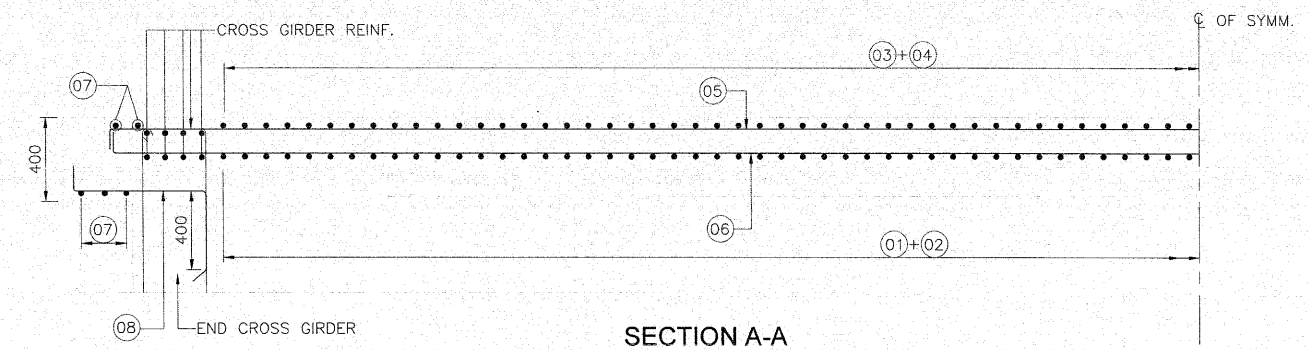

SECTION A-A
(SCALE 1:25)

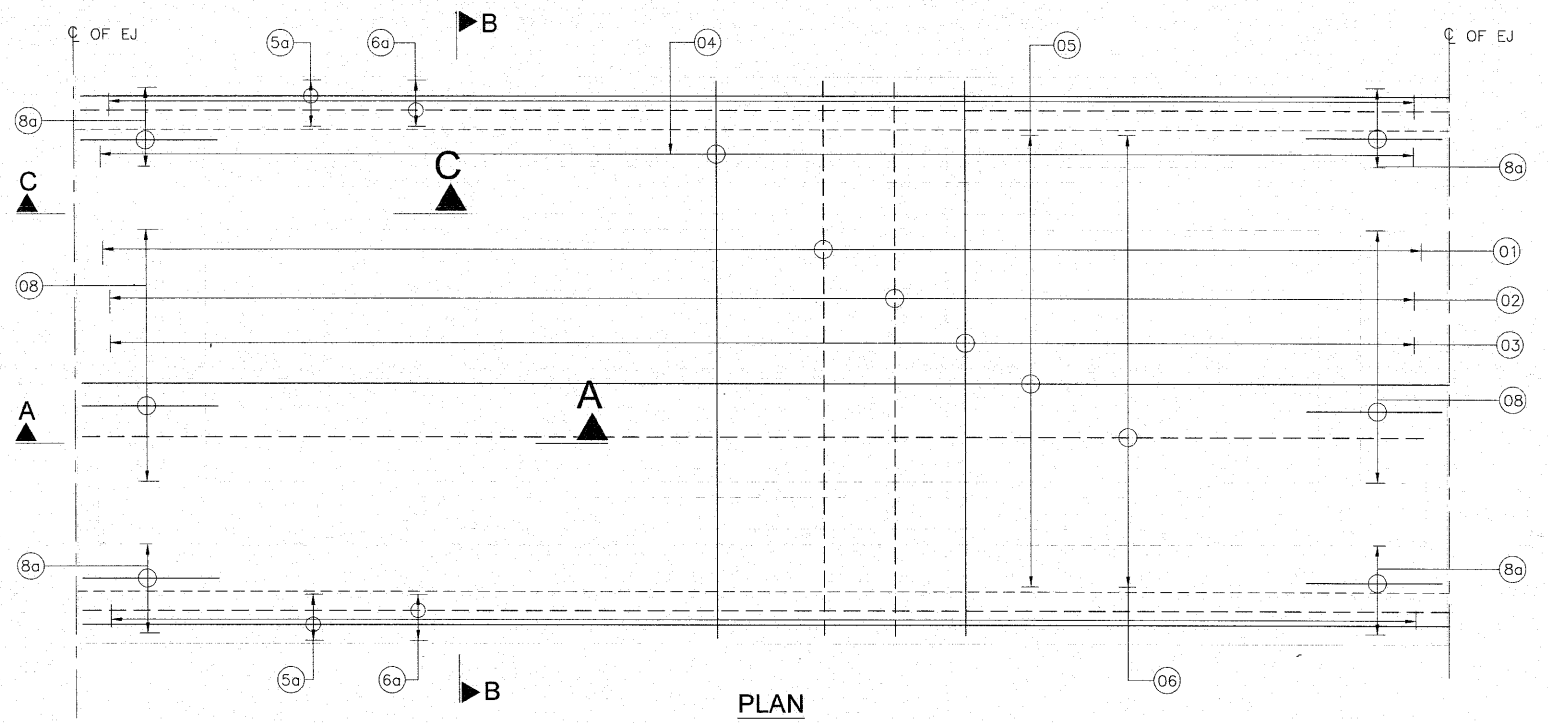

PLAN
SCALE: 1:50

SCHEDULE OF REINFORCEMENT

BAR MARK	SHAPE	BAR DIA & SPACING/Nos.	REMARKS
(01)	120	10 ϕ @ 150 C/C	BAR NO. 1 & 2 ARE ALTERNATE BARS
(02)		10 ϕ @ 150 C/C	
(03)	120	12 ϕ @ 150 C/C	BAR NO. 3 & 4 ARE ALTERNATE BARS
(04)	120 120	12 ϕ @ 150 C/C	
(05)		10 ϕ @ 200 C/C	
(5a)		16 ϕ–2x4 NOS.	
(06)		10 ϕ @ 200 C/C	
(6a)		16 ϕ–2x4 NOS.	
(07)		12 ϕ–5 NOS.	
(08)	400	12 ϕ @ 150 C/C	
(8a)	400	10 ϕ @ 150 C/C	

LEGEND:-

TOP REINFORCEMENT

BOTTOM REINFORCEMENT

Resident Engineer
STUP Consultants Pvt. Ltd.
Nagaon, Assam

CRASH BARRIER TO BE LEFT IN POSITION WHILE CASTING DECK SLAB

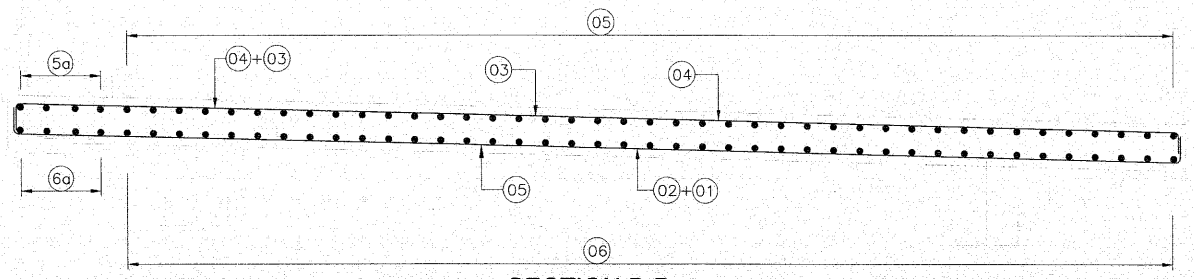

SECTION B-B
(SCALE 1:25)

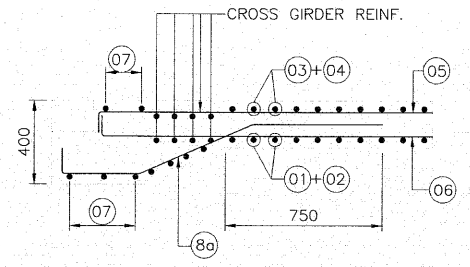

SECTION C-C
SCALE 1:25

Acting Team Leader
STUP Consultants Pvt. Ltd.
Nagaon, Assam

AECOM India Private Limited Gurgaon

Rev.	Date	Description on Revisions
R0	13-12-2022	FIRST SUBMISSION

Revisions

CLIENT:- NATIONAL HIGHWAYS & INFRASTRUCTURE (Development Coporation Ltd)

AUTHORITY'S ENGINEER: STUP Consultants P. Ltd & Ayoleeza Consultants P. Ltd.

AUTHORISED SIGNATORY | DATE

PROJECT MANAGEMENT CONSULTANT:- C & TESTING COMPANY PVT. LTD.

AUTHORISED SIGNATORY | DATE

SAEFTY CONSULTANT:- Chaitanya Projects Consultancy Pvt. Ltd

AUTHORISED SIGNATORY | DATE

PROJECT: FOUR LANING OF NH-37 FROM RANGAGARA TO KALIABOR TINIALI (CH: 297.000 KM TO CH: 315.315 KM) IN NAGAON DISTRICT IN THE STATE OF ASSAM UNDER SARDP-NE, PHASE A ON EPC MODE

EPC CONTRACTOR: SIMPLEX INFRASTRUCTURES LIMITED, 27, SHAKESPEARE SARANI, KOLKATA-17 INDIA

CONSULTANTS:- AECOM, 9th Floor, Infinity Tower C DLF Cyber City, DLF Phase II, Gurgaon-122002, Haryana, India

MANISH VERMA	PRAMOD KIRAR	S P SINGH	S RASTOGI
DRAWN	DESIGN	CHECKED BY	APPROVED BY

SCALE:- AS SHOWN

TITLE:- DIMENSION & REINFORCEMENT DETAILS OF RCC GIRDER OF SPAN 10.4M FOR MINOR BRIDGE AT CH. 303+490 (SCH-B CH. 303+200) (RCC DECK SLAB)

DRAWING NO.:- AECOM-DELD15159-DD-DWG-MNB-303+200-SUP-02 (SH 4 OF 4) | REV. R0

<<< TO RANGAGARA

TO KALIABOR >>>

DETAILS A

LEGEND:-

- Left Carriageway (Flyover)
- Right Carriageway(At Grade)
- Service/Slip Road(COS)
- Junction Improvement
- Median / Island
- New Jersy Crash Barrier
- Existing At Grade Four Lane(NH-37A)
- BEYOND SCOPE AS PER SCHEDULE -B(COS)

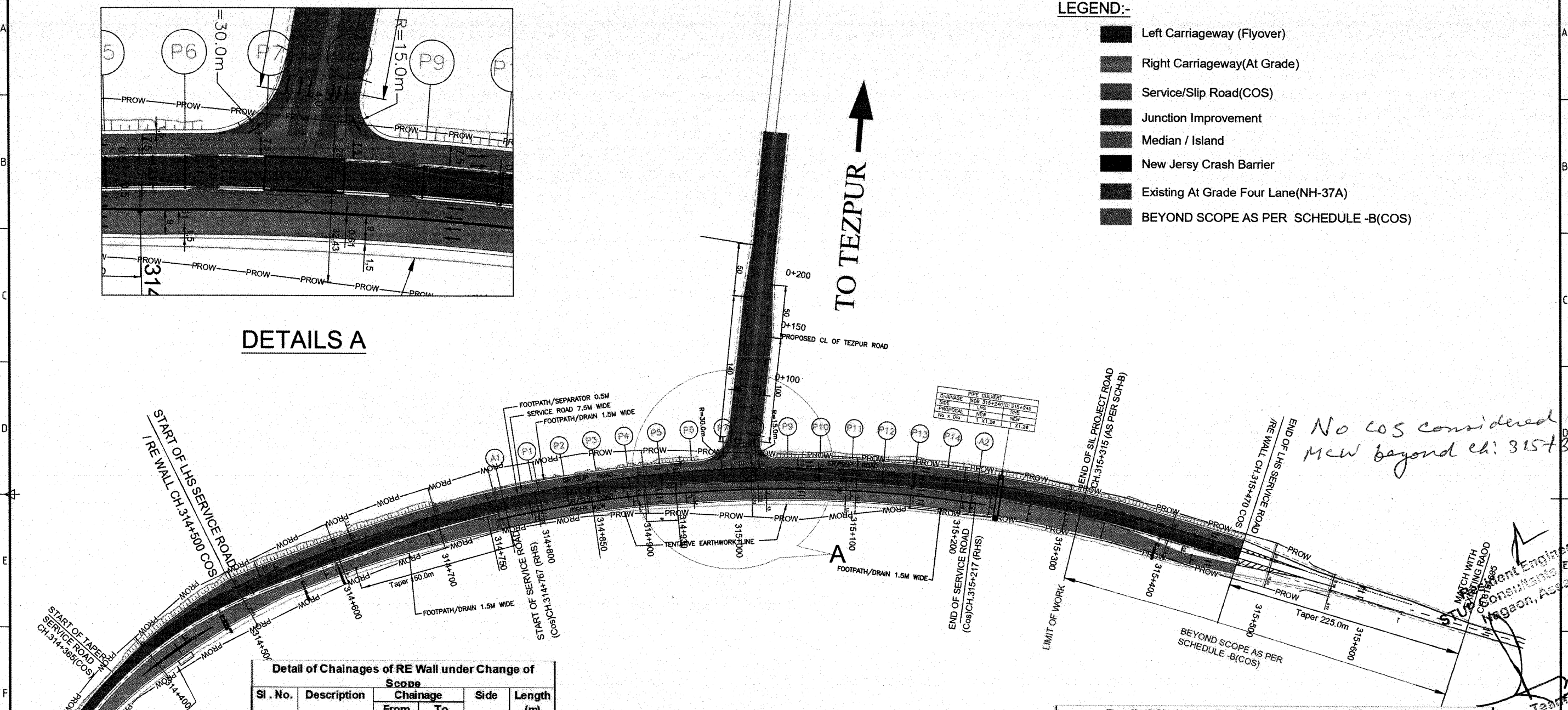

Detail of Chainages of RE Wall under Change of Scope					
Sl . No.	Description	Chainage		Side	Length (m)
		From	To		
1	A1 Approach	314+500	314+767	Both	267
2	A2 Approach	315+217	315+470	Both	253
Total = ((267+253)x2)					1040

Detail of Chainages for RCC Covered Drain under Change of Scope				
Sl . No.	Chainage		Side	Length
	From	To		
1	314+500	315+470	LHS	970
2	314+165	314+750	RHS	585
3	314+850	315+245	RHS	395
	Total			1,950

Detail of Chainages for Main Crriageway from Km. 315+315 to 315+695 under Change of Scope						
Sl . No.	Item	Chainage		Side	Length (m)	Width (m)
		From	To			
1	Main Carriageway	315+315	315+417	RCW	102	RCW = 9.00 m.
2	Main Carriageway	315+417	315+470	RCW	53	RCW = 9.00 m.
3	Main Carriageway	315+470	315+537	Both	67	LCW = 11.90 m and RCW = 9.00 m.
4	Main Carriageway	315+537	315+600	Both	63	Both CW due to Merging
5	Main Carriageway	315+600	315+695	Both	95	2-Lane
Total					380	

Detail of Chainages for Service Road under Change of Scope						
Sl . No.	Item	Chainage		Side	Length	Remarks
		From	To			
1	Taper Service Road	314+365	314+500	LHS	135	
	Service Road	**314+500**	**315+470**	**LHS**	**970**	
	Taper Service Road	315+470	315+545	LHS	75	
	Taper Service Road	315+545	315+640	LHS	95	
	Taper Service Road	315+640	315+695	LHS	55	
	Total(LHS)				**1,330**	
2	Taper Service Road	314+617	314+767	RHS	150	
	Service Road	**314+767**	**315+217**	**RHS**	**450**	
	Service Road	**315+217**	**315+239**	**RHS**	**22**	
	Service Road	**315+239**	**315+347**	**RHS**	**108**	
	Taper Service Road	315+347	315+417	RHS	70	
	Total(RHS)				**800**	

LAYOUT PLAN AT KALIABOR JUNCTION

STUP Consultants Pvt. Ltd. Resident Engineer Nagaon, Assam

Acting Team Leader STUP Consultants Pvt. Ltd. Nagaon, Assam

CLIENT:-	AUTHORITY'S ENGINEER:	PROOF CHECKED CONSULTANT:-	SAEFTY CONSULTANT:-	PROJECT:	EPC CONTRACTOR:-	CONSULTANTS:-	SCALE:-	TITLE:-
NATIONAL HIGHWAYS & INFRASTRUCTURE DEVELOPMENT CORPORATION LTD.	STUP Consultants P. Ltd & Ayoleeza Consultants P. Ltd.	CE TESTING Company Pvt. Ltd	Chaitanya Projects Consultancy Pvt. Ltd	FOUR LANING OF NH-37 FROM RANGAGARA TO KALIABOR TINIALI (CH: 297.000 KM TO CH: 315.315 KM) IN NAGAON DISTRICT IN THE STATE OF ASSAM UNDER SARDP-NE, PHASE A ON EPC MODE	SIMPLEX INFRASTRUCTURES LIMITED 27, SHAKESPEARE SARANI, KOLKATA-71, INDIA	AECOM 9th Floor, Infinity Tower C DLF Cyber City DLF Phase II, Gurgaon-122002, Haryana, India	NTS	MAJOR JUNCTION (CH: 314+735)
	AUTHORISED SIGNATORY / DATE	AUTHORISED SIGNATORY / DATE	AUTHORISED SIGNATORY / DATE			DRAWN / DESIGN / CHECKED BY / APPROVED BY		DRAWING NO.:- AECOM-DELD15159-DD-DWG-PP-01

AECOM India Private Limited Gurgaon

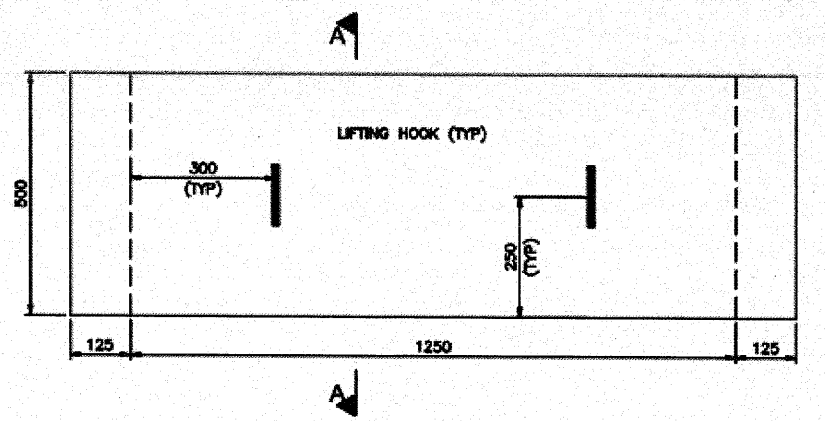

PLAN FOR COVER SLAB
(SCALE 1:10)

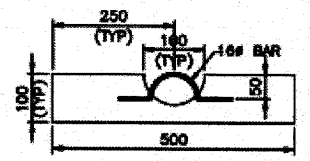

SECTION-A-A
DETAIL OF LIFTING HOOK (TYPICAL)
(SCALE 1:10)

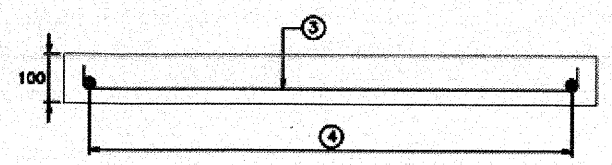

SECTION AT B-B (TYPICAL)
(SCALE 1:10)

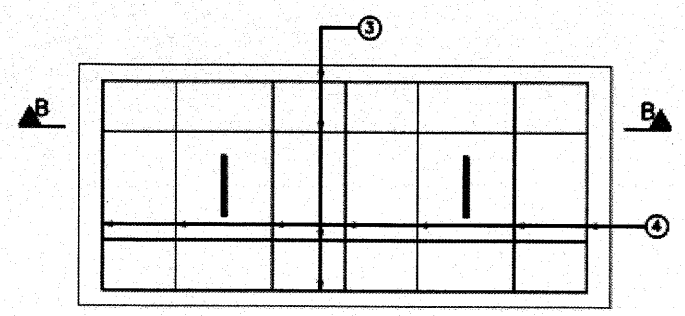

R.C. DETAILS OF DRAIN SLAB (TYPICAL)
(SCALE 1:10)

NOTES:-

1. ALL DIMENSIONS ARE IN mm. AND LEVELS IN METERS UNLESS MENTIONED OTHERWISE.
2. GRADE OF CONCRETE :-
   M20 – FOR RCC DRAIN & COVER SLAB.
3. ALL REINFOCING STEEL SHOULD BE HIGH YIELD STRENGTH DEFORMED (TMT) BARS OF (GRADE–Fe 500).
4. LAPS IN REINFORCEMENT :–
   (i) MINIMUM LAP LENGTH OF REINFORCEMENT SHALL BE
   (a) FOR M20 GRADE OF CONCRETE– 66*D
5. CLEAR COVER TO REINFORCEMENT IS 40mm.

SCHEDULE OF REINFORCEMENT
FOR DRAIN & DRAIN SLAB

BAR MARK	SHAPE OF BARS	DEPTH VARIES 500–1500 mm DIA – NOS./SPACING
①		10ø –150 c/c
②		8ø –200 c/c
③		10ø –150 c/c
④		10ø –150 c/c

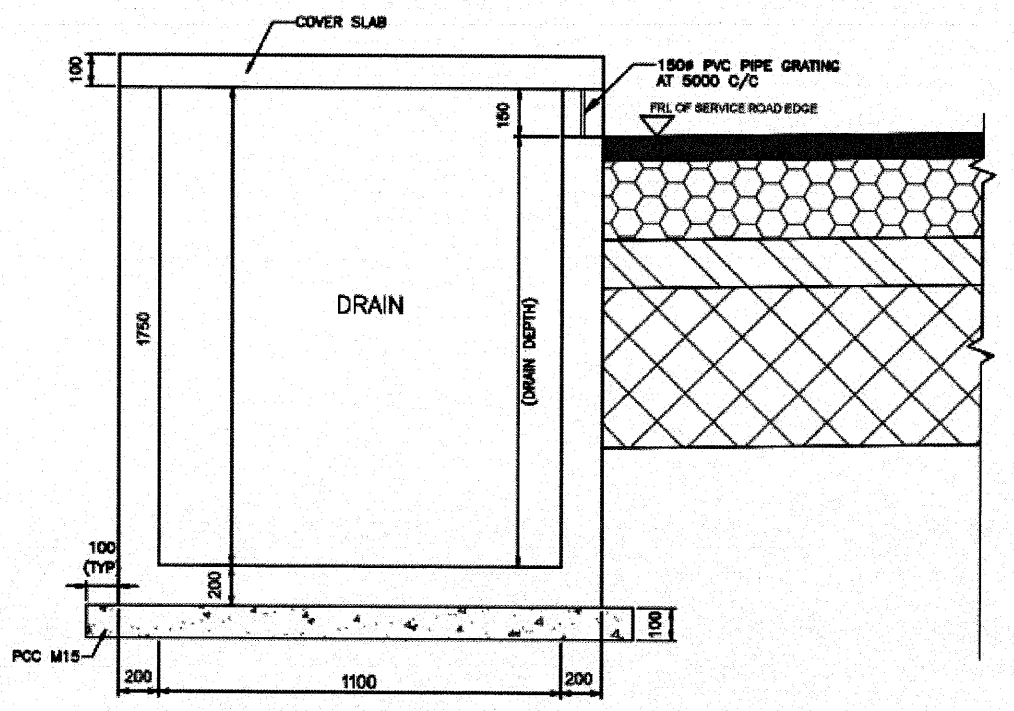

TYPICAL SECTION OF RCC DRAIN
(SCALE 1:15)

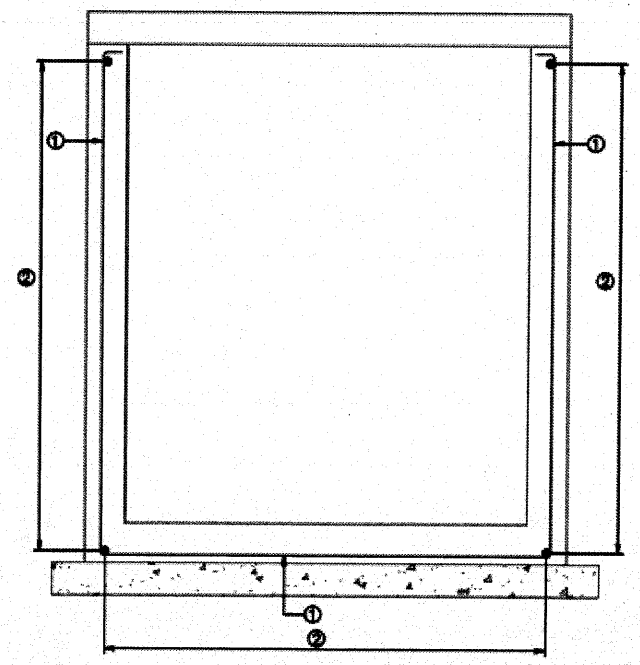

REINFORCEMENT DETAIL FOR DRAIN
DEPTH UPTO 1 m
(SCALE 1:15)

Acting Team Leader
STUP Consultants Pvt. Ltd.
Nagaon, Assam

Resident Engineer
STUP Consultants Pvt. Ltd.
Nagaon, Assam

Rev.	Date	Description on Revisions
R0	July 2018	First Submission

Revisions

CLIENT:- NATIONAL HIGHWAYS & INFRASTRUCTURE DEVELOPMENT CORPORATION LTD.

AUTHORITY'S ENGINEER: STUP Consultants P. Ltd & Ayoleeza Consultants P. Ltd. — AUTHORISED SIGNATORY | DATE

PROOF CHECKED CONSULTANT:- CE TESTING Company Pvt. Ltd — AUTHORISED SIGNATORY | DATE

SAEFTY CONSULTANT:- Chaitanya Projects Consultancy Pvt. Ltd — AUTHORISED SIGNATORY | DATE

PROJECT: FOUR LANING OF NH-37 FROM RANGAGARA TO KALIABOR TINIALI (CH: 297.000 KM TO CH: 315.315 KM) IN NAGAON DISTRICT IN THE STATE OF ASSAM UNDER SARDP-NE, PHASE A ON EPC MODE

EPC CONTRACTOR:- SIMPLEX INFRASTRUCTURES LIMITED, 27, SHAKESPEARE SARANI, KOLKATA-700 071

CONSULTANTS:- AECOM, 9th Floor, Infinity Tower C DLF Cyber City, DLF Phase II, Gurgaon-122002, Haryana, India — DRAWN | DESIGN | SL Team Leader | MER Project Director | CHECKED BY | APPROVED BY

SCALE:-

TITLE:- RCC DRAIN SECTION & REINFORCEMENT DRAWING

DRAWING NO.:- AECOM-DRLD15159-DD-DWG-DP- MISC-001 — REV. R0

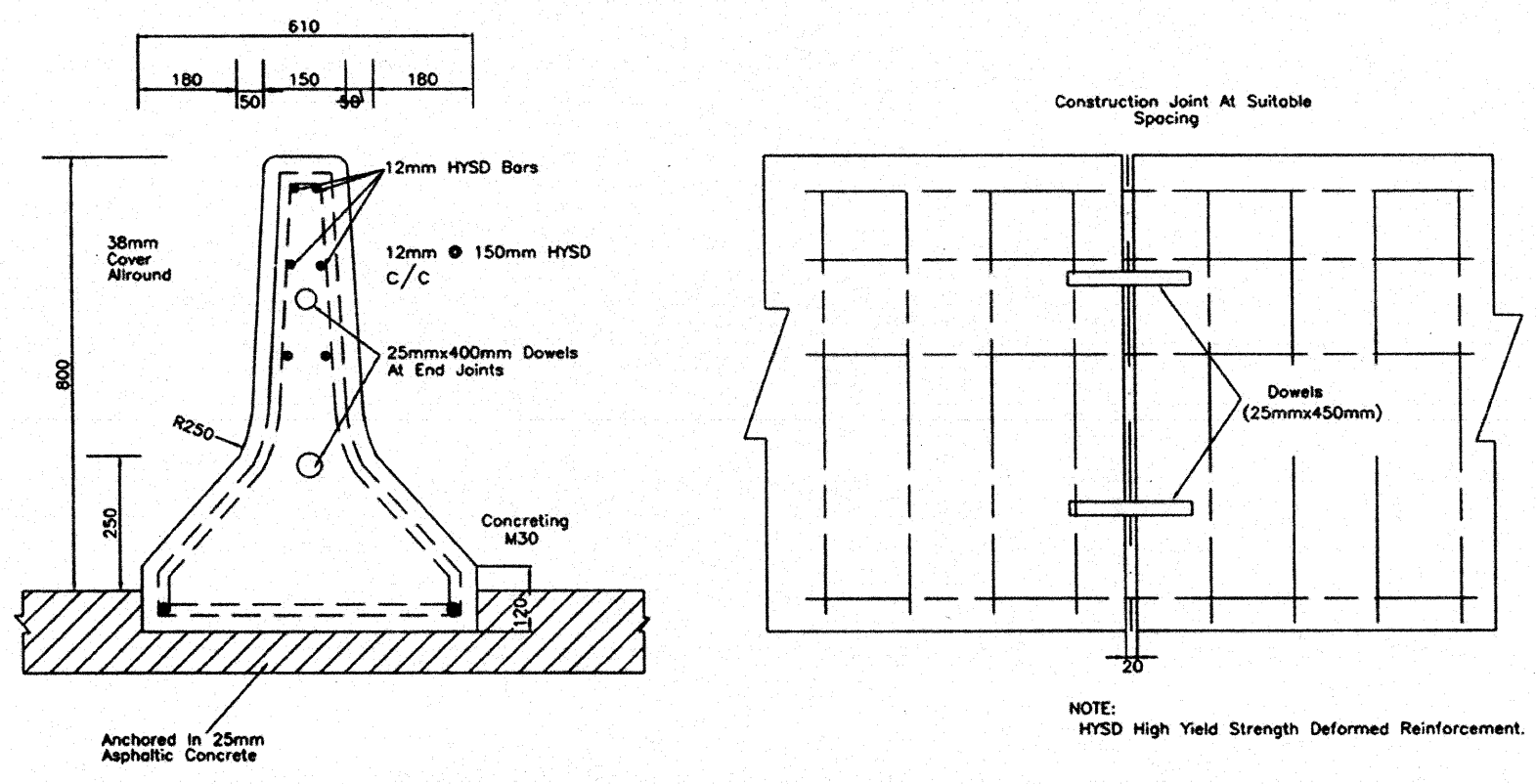

Ref: IRC 119-2015

Fig. 26 Roadside/Median Barrier Cast-In-Situ Design
(Source Ref.2)

Acting Team Leader
STUP Consultants Pvt. Ltd.
Nagaon, Assam

Resident Engineer
STUP Consultants Pvt. Ltd.
Nagaon, Assam

Simplex Infrastructures Ltd.

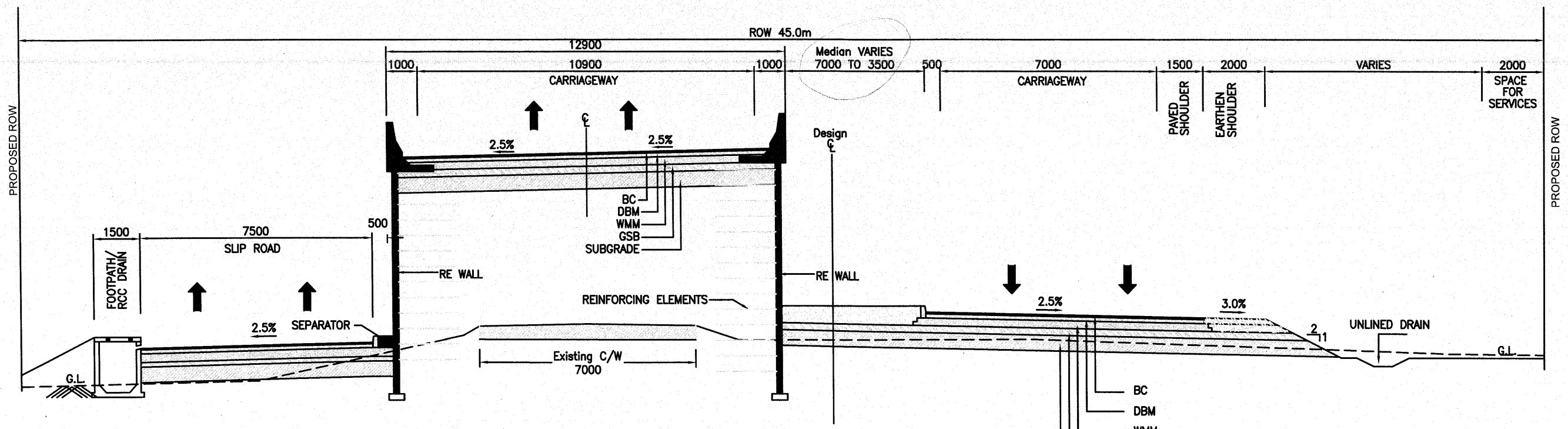

TYPE–8G

TYPICAL CROSS SECTION FOR CH: 315+417 TO CH: 315+470

FOR APPROVAL

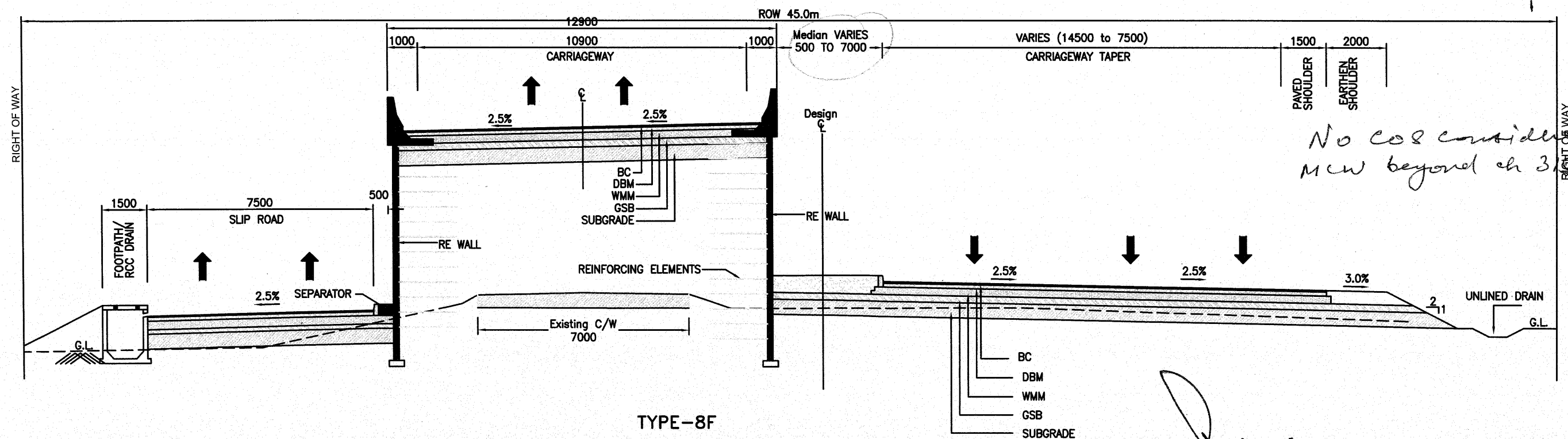

No COS considered for MCW beyond ch 315+315

TYPE–8F

TYPICAL CROSS SECTION FOR CH: 315+347 TO CH: 315+417
(VARIES MEDIAN & CARRIAGEWAY RCW WITH EARTHEN SHOULDER ON RHS)

ght of Way (ROW) as shown in TCS is meant to indicate proposed cross section
highway shall be accommodated within ROW.
ctual Right of Way (ROW) has marked in Alignment Plan based on data provided
y AE vide letter ref: STUP / NH 37 / SIL / 2017 /01 dated 9 Feb 2017 and site meeting on 15 Feb 2017.
onstruction of Slip Road along with Associated works are under change of scope (COS).

Acting Team Leader
STUP Consultants Pvt. Ltd.

Resident Engineer

Rev.	Date	Description of Revisions
R3	Nov 2022	As per Site Conditions
R2	Aug 2020	Service Road on RHS
R1	May 2018	Slip Road added & Notation shifted
R0	November 2017	First Submission

Revisions

NATIONAL HIGHWAYS & INFRASTRUCTURE DEVELOPMENT CORPORATION LTD.

AUTHORITY'S ENGINEER: STUP Consultants P. Ltd & Ayoleeza Consultants P. Ltd. — AUTHORISED SIGNATORY — DATE

PROOF CHECKED CONSULTANT:- CE TESTING Company Pvt. Ltd — AUTHORISED SIGNATORY — DATE

SAEFTY CONSULTANT:- Chaitanya Projects Consultancy Pvt. Ltd — AUTHORISED SIGNATORY — DATE

PROJECT: FOUR LANING OF NH-37 FROM RANGAGARA TO KALIABOR TINIALI (CH: 297.000 KM TO CH: 315.315 KM) IN NAGAON DISTRICT IN THE STATE OF ASSAM UNDER SARDP-NE, PHASE A ON EPC MODE

EPC CONTRACTOR:- SIMPLEX INFRASTRUCTURES LIMITED, 27, SHAKESPEARE SARANI, KOLKATA, INDIA

CONSULTANTS:- AECOM, 9th Floor, Infinity Tower C DLF Cyber City, DLF Phase II, Gurgaon-122002, Haryana, India — DRAWN | DESIGN | CHECKED BY (SL, Team Leader) | APPROVED BY (MSR, Design Director)

SCALE:- 1 : 1000

TITLE:- TYPICAL CROSS SECTION (TYPE-8F & 8G)

DRAWING NO.:- AECOM-DELD15159-DD-DWG-TCS- 005F — REV. R3

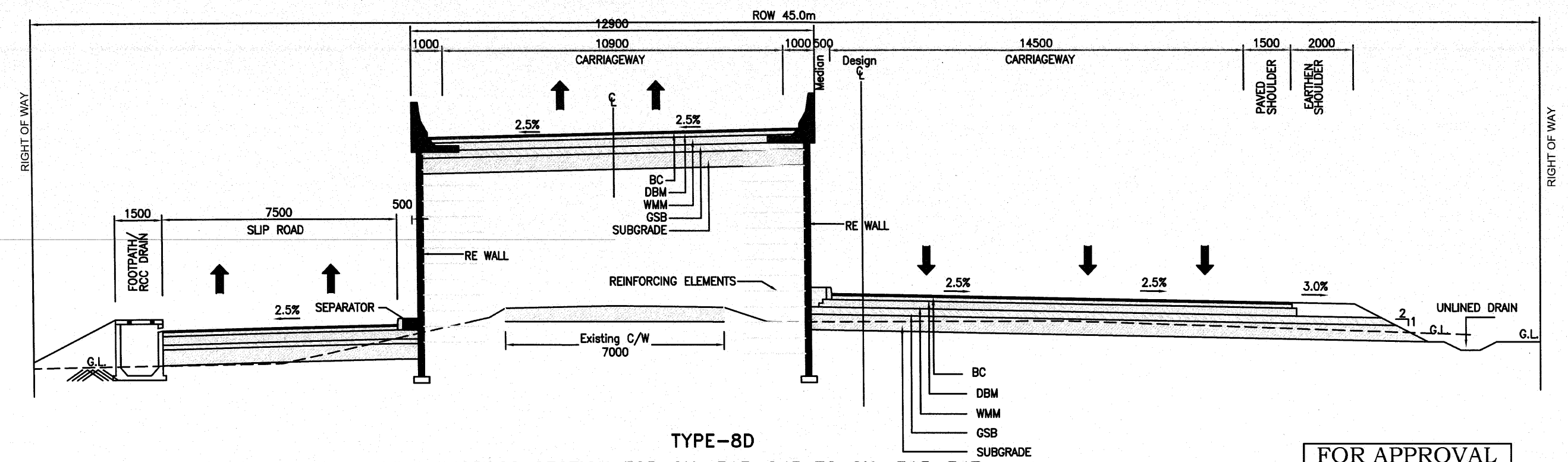

TYPE–8D

TYPICAL CROSS SECTION FOR CH: 315+245 TO CH: 315+347
(14.5M RCW WITH EARTHEN SHOULDER ON RHS)

FOR APPROVAL

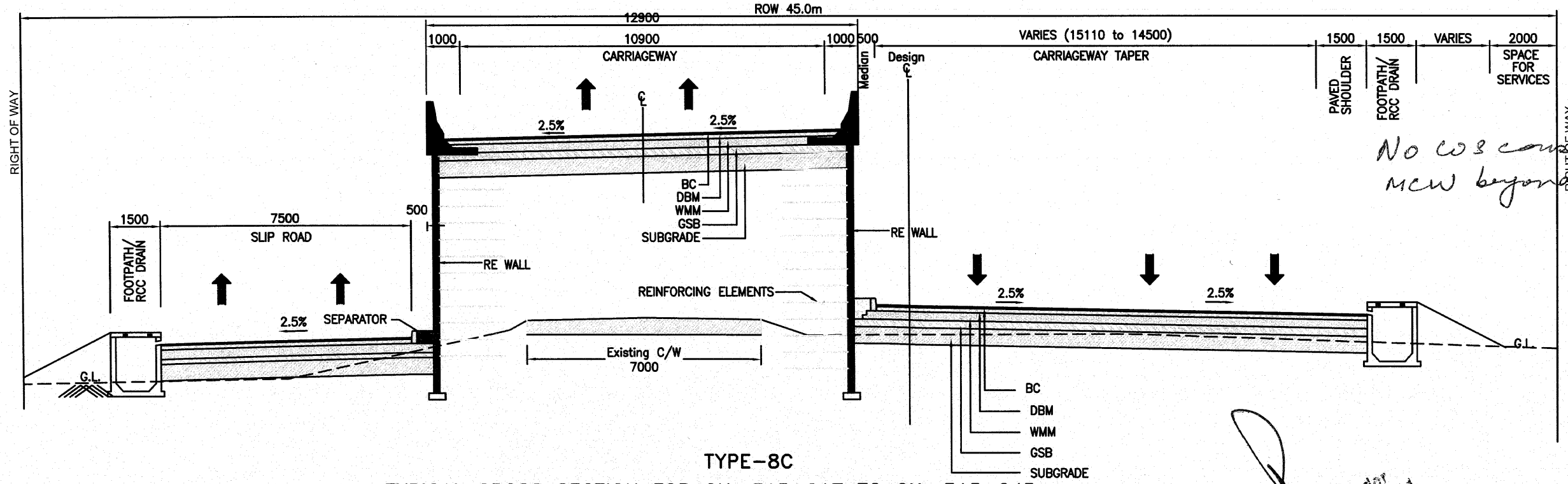

No cos considered for MCW beyond ch: 315+215

TYPE–8C

TYPICAL CROSS SECTION FOR CH: 315+217 TO CH: 315+245
(TAPER TO 7.0M SLIP ROAD WITH 9M RCW WITH DRAIN ON RHS)

Resident Engineer
STUP Consultants Pvt. Ltd.

Acting Team Leader
STUP Consultants Pvt. Ltd.

ght of Way (ROW) as shown in TCS is meant to indicate proposed cross section
highway shall be accommodated within ROW.
ctual Right of Way (ROW) has marked in Alignment Plan based on data provided
y AE vide letter ref: STUP / NH 37 / SIL / 2017 /01 dated 9 Feb 2017 and site meeting on 15 Feb 2017.
onstruction of Slip Road along with Associated works are under change of scope (COS).

Rev.	Date	Description of Revisions
R3	Nov 2022	As per Site Conditions
R2	Aug 2020	Service Road on RHS
R1	May 2018	Slip Road added & Alignment shifted
R0	November 2017	First Submission

Revisions

NATIONAL HIGHWAYS & INFRASTRUCTURE DEVELOPMENT CORPORATION LTD.	AUTHORITY'S ENGINEER: STUP Consultants P. Ltd & Ayoleeza Consultants P. Ltd.	PROOF CHECKED CONSULTANT:- CE TESTING Company Pvt. Ltd	SAEFTY CONSULTANT:- Chaitanya Projects Consultancy Pvt. Ltd	PROJECT: FOUR LANING OF NH-37 FROM RANGAGARA TO KALIABOR TINIALI (CH: 297.000 KM TO CH: 315.315 KM) IN NAGAON DISTRICT IN THE STATE OF ASSAM UNDER SARDP-NE, PHASE A ON EPC MODE	EPC CONTRACTOR:- SIMPLEX INFRASTRUCTURES LIMITED 27, SHAKESPEARE SARANI, KOLKATA-700 071, INDIA
	AUTHORISED SIGNATORY / DATE	AUTHORISED SIGNATORY / DATE	AUTHORISED SIGNATORY / DATE		

CONSULTANTS:-	SCALE:-	TITLE:-
AECOM 9th Floor, Infinity Tower C DLF Cyber City DLF Phase II, Gurgaon-122002, Haryana, India	1 : 1000	TYPICAL CROSS SECTION (TYPE-8C/8D)
DRAWN / DESIGN / CHECKED BY (Team Leader) SL / APPROVED BY (Design Director) MSR		DRAWING NO.:- AECOM-DELD15159-DD-DWG-TCS- 005R
		REV R3

AECOM India Private Limited Gurgaon

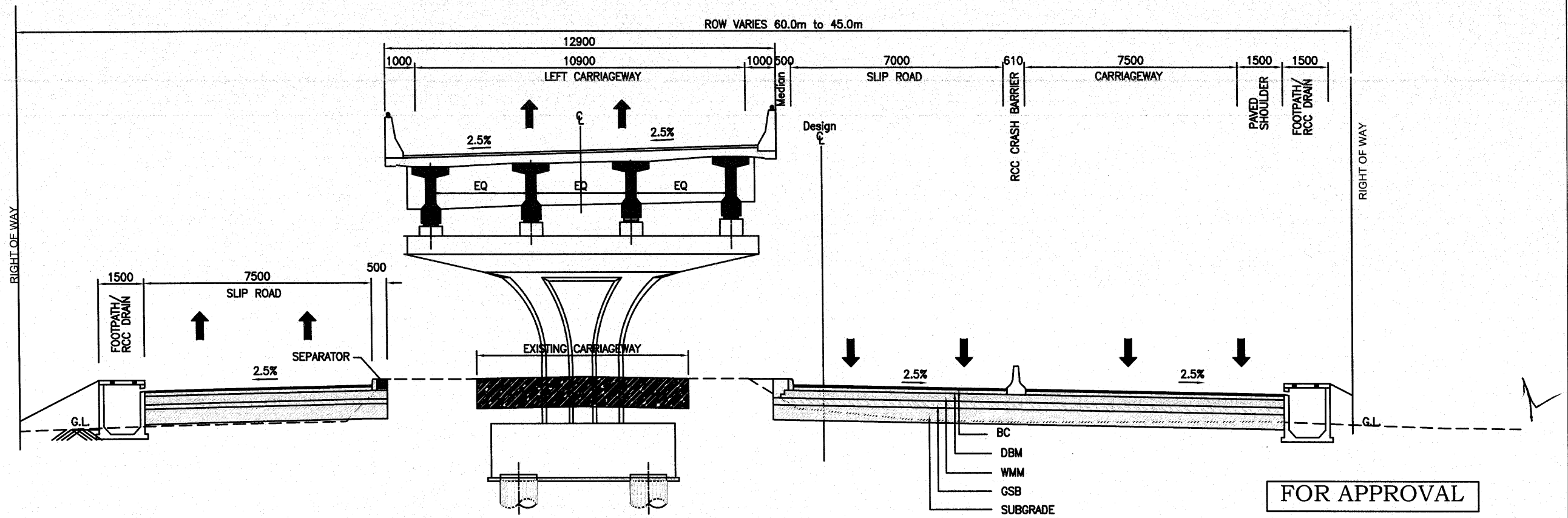

FOR APPROVAL

TYPE–9
TYPICAL CROSS SECTION FOR CH: 314+930 TO CH: 315+217
(7M SLIP ROAD WITH 9M RCW WITH DRAIN ON RHS)

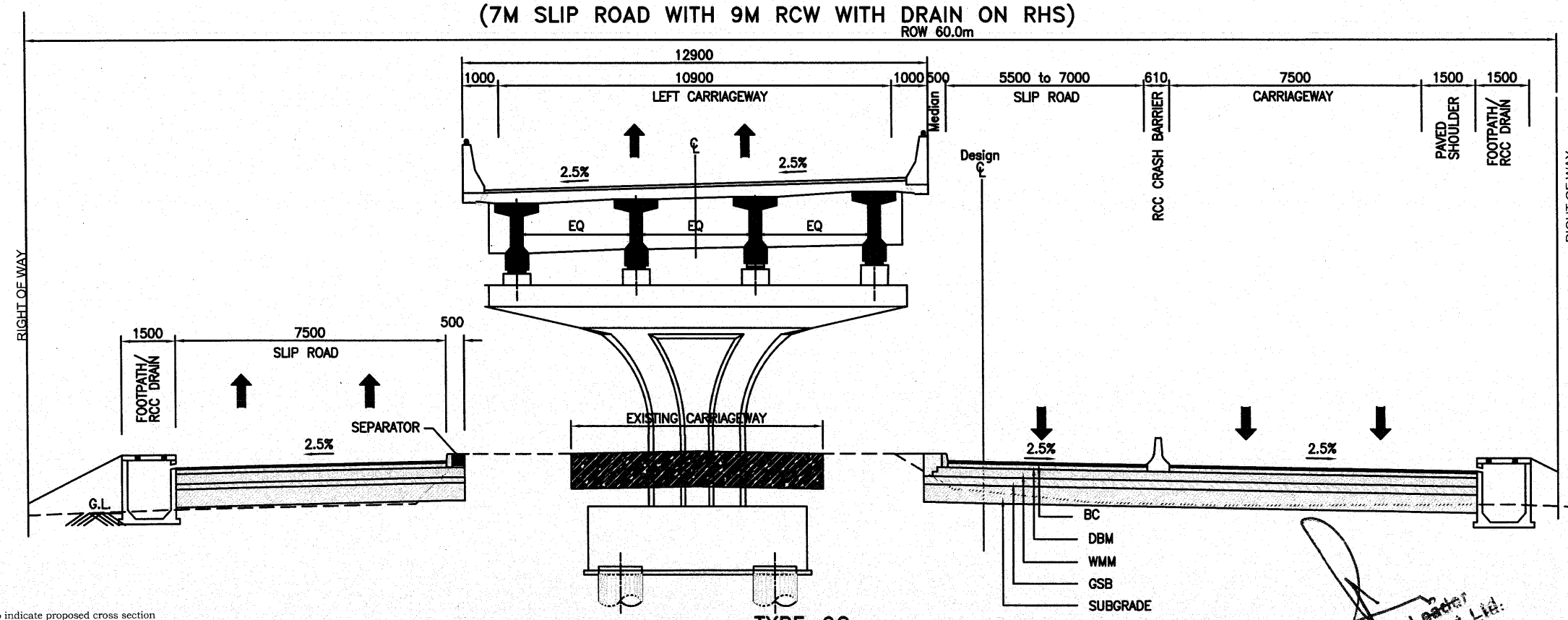

TYPE–9C
TYPICAL CROSS SECTION FOR CH: 314+900 TO CH: 314+930
(TAPER FROM 5.5M TO 7M SLIP ROAD WITH 9M RCW WITH DRAIN ON RHS)

Resident Engineer
STUP Consultants Pvt. Ltd.
Nagaon, Assam

Acting Team Leader
STUP Consultants Pvt. Ltd.
Nagaon, Assam

ght of Way (ROW) as shown in TCS is meant to indicate proposed cross section
highway shall be accommodated within ROW.
ctual Right of Way (ROW) has marked in Alignment Plan based on data provided
y AE vide letter ref: STUP / NH 37 / SIL / 2017 /01 dated 9 Feb 2017 and site meeting on 15 Feb 2017.
onstruction of Slip Road along with Associated works are under change of scope (COS).

Rev.	Date	Description of Revisions
R3	Nov 2022	As per Site Conditions
R2	Aug 2020	Service Road on RHS
R1	May 2018	Slip Road added & Alignment shifted
R0	November 2017	First Submission

Revisions

NATIONAL HIGHWAYS & INFRASTRUCTURE DEVELOPMENT CORPORATION LTD.

AUTHORITY'S ENGINEER: STUP Consultants P. Ltd & Ayoleeza Consultants P. Ltd. — AUTHORISED SIGNATORY | DATE

PROOF CHECKED CONSULTANT:- CE TESTING Company Pvt. Ltd — AUTHORISED SIGNATORY | DATE

SAEFTY CONSULTANT:- Chaitanya Projects Consultancy Pvt. Ltd — AUTHORISED SIGNATORY | DATE

PROJECT: FOUR LANING OF NH-37 FROM RANGAGARA TO KALIABOR TINIALI (CH: 297.000 KM TO CH: 315.315 KM) IN NAGAON DISTRICT IN THE STATE OF ASSAM UNDER SARDP-NE, PHASE A ON EPC MODE

EPC CONTRACTOR: SIMPLEX INFRASTRUCTURES LIMITED, 27, SHAKESPEARE SARANI, KOLKATA, INDIA

CONSULTANT: AECOM, 9th Floor, Infinity Tower C DLF Cyber City, DLF Phase II, Gurgaon-122002, Haryana, India — DRAWN | DESIGN | CHECKED BY (SL, Team Leader) | APPROVED BY (MSR, Design Director)

SCALE:- 1 : 1000

TITLE:- TYPICAL CROSS SECTION (TYPE-9 & 9C)

DRAWING NO.:- AECOM-DELD15159-DD-DWG-TCS- 005D

REV. R3

AECOM India Private Limited Gurgaon

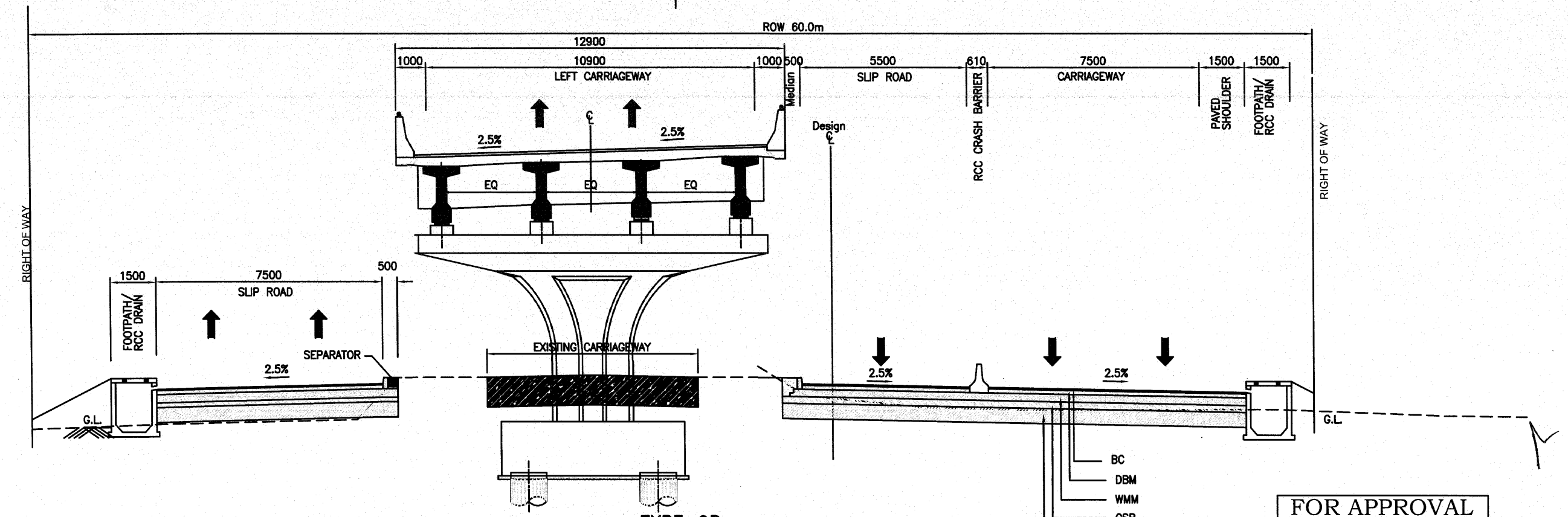

FOR APPROVAL

TYPE–9B

TYPICAL CROSS SECTION FOR CH: 314+850 TO CH: 314+900
(5.5M SLIP ROAD WITH 9M RIGHT CARRIAGEWAY WITH DRAIN ON RHS)

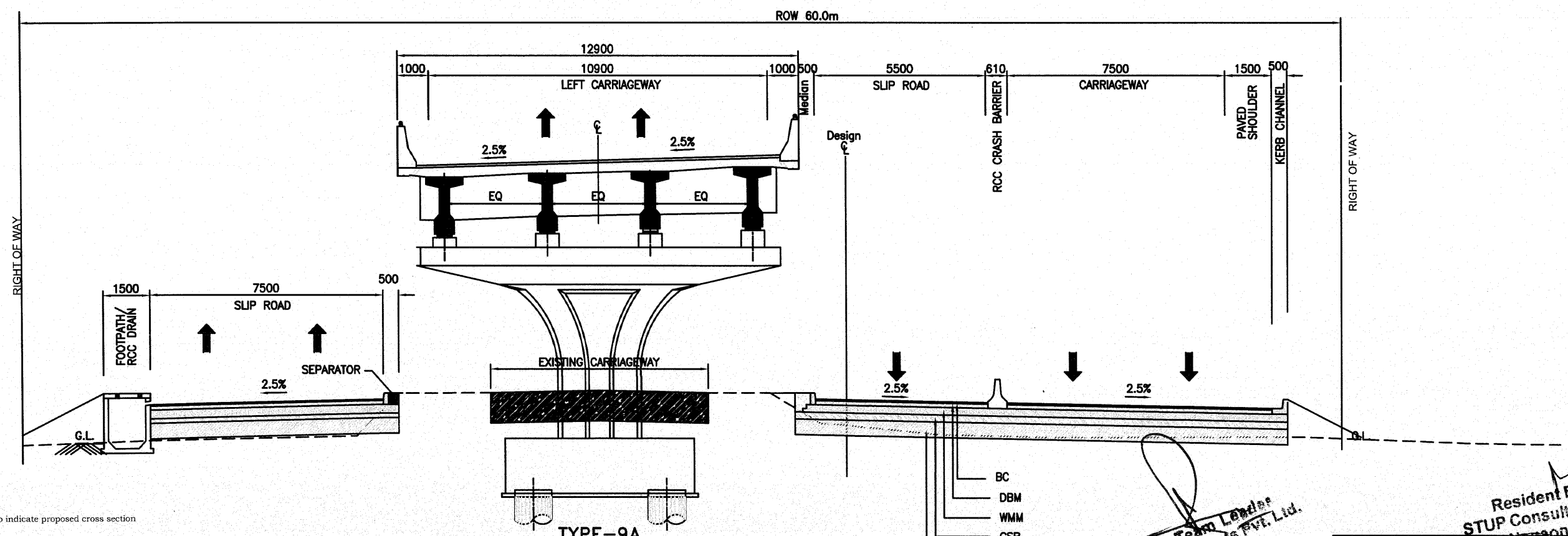

TYPE–9A

TYPICAL CROSS SECTION FOR CH: 314+767 TO CH: 314+850
(5.5M SLIP ROAD WITH 9M RIGHT CARRIAGEWAY WITH KERB CHANNEL ON RHS)

ght of Way (ROW) as shown in TCS is meant to indicate proposed cross section
highway shall be accommodated within ROW.
ctual Right of Way (ROW) has marked in Alignment Plan based on data provided
y AE vide letter ref: STUP / NH 37 / SIL / 2017 /01 dated 9 Feb 2017 and site meeting on 15 Feb 2017.
onstruction of Slip Road along with Associated works are under change of scope (COS).

Acting Team Leader
STUP Consultants Pvt. Ltd.
Nagaon, Assam

Resident Engineer
STUP Consultants Pvt. Ltd.
Nagaon, Assam

Rev.	Date	Description of Revisions
R3	Nov 2022	As per Site Conditions
R2	Aug 2020	Service Road on RHS
R1	May 2018	Slip Road added & Alignment shifted
R0	November 2017	First Submission

Revisions

NATIONAL HIGHWAYS & INFRASTRUCTURE DEVELOPMENT CORPORATION LTD.

AUTHORITY'S ENGINEER: STUP Consultants P. Ltd & Ayoleeza Consultants P. Ltd. — AUTHORISED SIGNATORY | DATE

PROOF CHECKED CONSULTANT:- CE TESTING Company Pvt. Ltd — AUTHORISED SIGNATORY | DATE

SAEFTY CONSULTANT:- Chaitanya Projects Consultancy Pvt. Ltd — AUTHORISED SIGNATORY | DATE

PROJECT: FOUR LANING OF NH-37 FROM RANGAGARA TO KALIABOR TINIALI (CH: 297.000 KM TO CH: 315.315 KM) IN NAGAON DISTRICT IN THE STATE OF ASSAM UNDER SARDP-NE, PHASE A ON EPC MODE

EPC CONTRACTOR:- SIMPLEX INFRASTRUCTURES LIMITED, 27, SHAKESPEARE SARANI, KOLKATA - INDIA

CONSULTANTS:- AECOM, 9th Floor, Infinity Tower C DLF Cyber City, DLF Phase II, Gurgaon-122002, Haryana, India

DRAWN	DESIGN	CHECKED BY (Team Leader: SL)	APPROVED BY (Design Director: MSR)

SCALE:- 1 : 1000

TITLE:- TYPICAL CROSS SECTION (TYPE-9A & 9B)

DRAWING NO.:- AECOM-DELD15159-DD-DWG-TCS- 005C

REV. R3

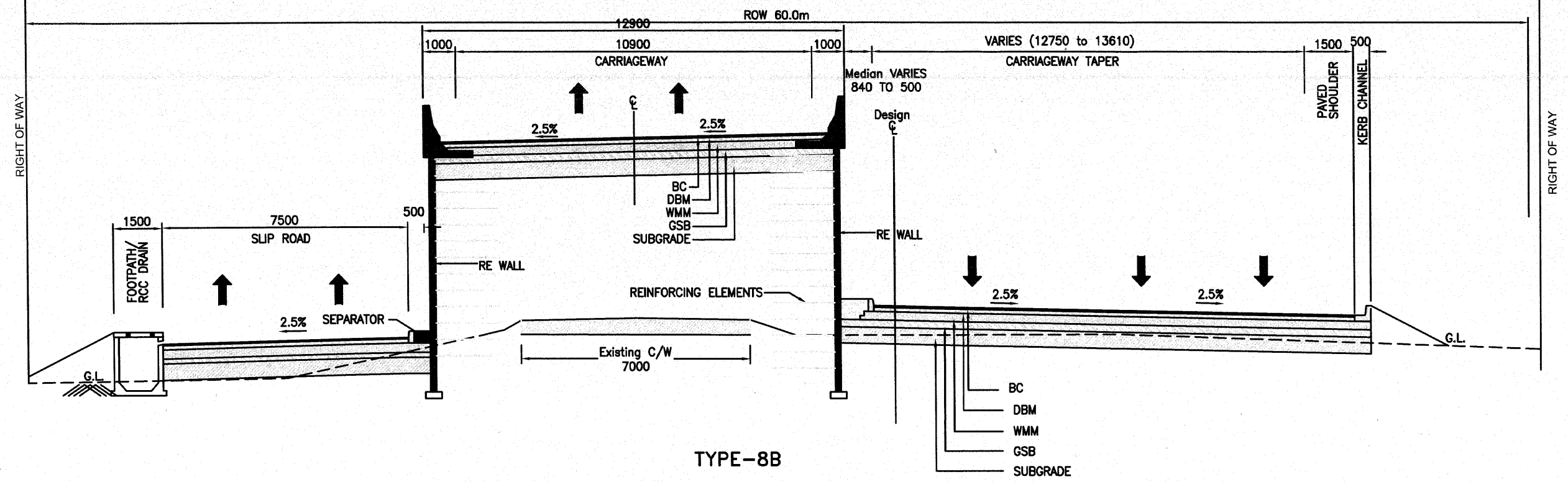

TYPE-8B

TYPICAL CROSS SECTION FOR CH: 314+750 TO CH: 314+767
(VARIABLE MEDIAN & RIGHT CARRIAGEWAY WITH KERB CHANNEL ON RHS)

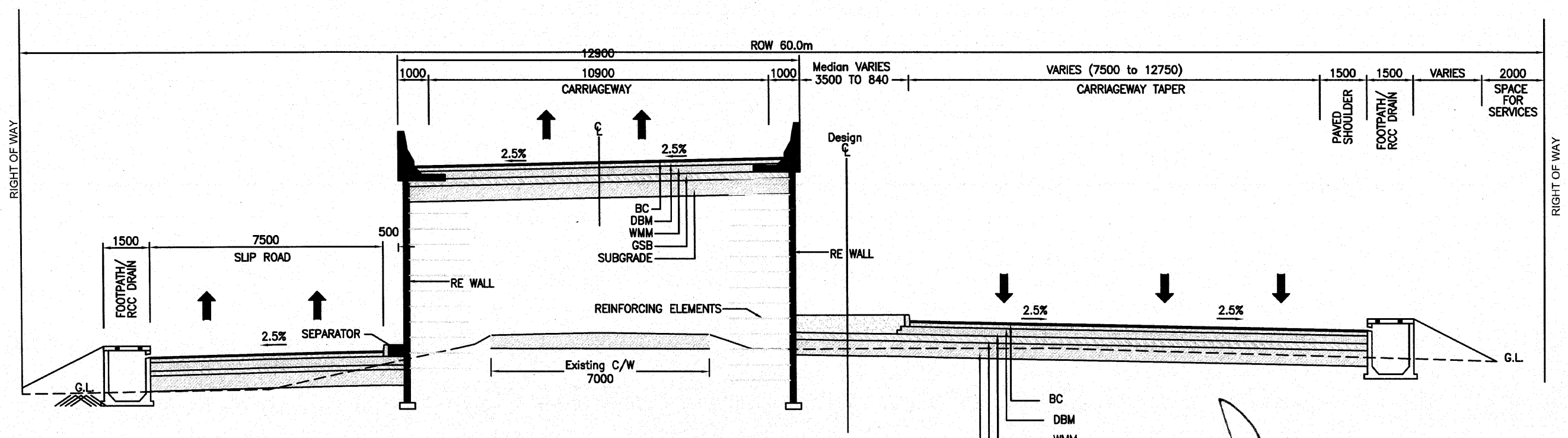

TYPE-8A

TYPICAL CROSS SECTION FOR CH: 314+600 TO CH: 314+750
(VARIABLE MEDIAN & RIGHT CARRIAGEWAY WITH DRAIN ON RHS)

ght of Way (ROW) as shown in TCS is meant to indicate proposed cross section
highway shall be accommodated within ROW.
ctual Right of Way (ROW) has marked in Alignment Plan based on data provided
y AE vide letter ref: STUP / NH 37 / SIL / 2017 /01 dated 9 Feb 2017 and site meeting on 15 Feb 2017.
onstruction of Slip Road along with Associated works are under change of scope (COS).

FOR APPROVAL

Acting Team Leader
STUP Consultants Pvt. Ltd.
Nagaon, Assam

Resident Engineer
STUP Consultants Pvt. Ltd.
Nagaon, Assam

Rev.	Date	Description of Revisions
R3	Nov 2022	As per Site Conditions
R2	Aug 2020	Service Road on RHS
R1	May 2018	Slip Road added & Alignment shifted
R0	November 2017	First Submission

Revisions

NATIONAL HIGHWAYS & INFRASTRUCTURE DEVELOPMENT CORPORATION LTD.

AUTHORITY'S ENGINEER: STUP Consultants P. Ltd & Ayoleeza Consultants P. Ltd. — AUTHORISED SIGNATORY | DATE

PROOF CHECKED CONSULTANT:- CE TESTING Company Pvt. Ltd — AUTHORISED SIGNATORY | DATE

SAEFTY CONSULTANT:- Chaitanya Projects Consultancy Pvt. Ltd — AUTHORISED SIGNATORY | DATE

PROJECT: FOUR LANING OF NH-37 FROM RANGAGARA TO KALIABOR TINIALI (CH: 297.000 KM TO CH: 315.315 KM) IN NAGAON DISTRICT IN THE STATE OF ASSAM UNDER SARDP-NE, PHASE A ON EPC MODE

EPC CONTRACTOR:- SIMPLEX INFRASTRUCTURES LIMITED, 27, SHAKESPEARE SARANI, KOLKATA-17, INDIA

CONSULTANTS:- AECOM, 9th Floor, Infinity Tower C DLF Cyber City, DLF Phase II, Gurgaon-122002, Haryana, India

DRAWN	DESIGN	CHECKED BY (SL, Team Leader)	APPROVED BY (MSR, Design Director)

SCALE:- 1 : 1000

TITLE:- TYPICAL CROSS SECTION (TYPE-8A & 8B)

DRAWING NO.:- AECOM-DELD15159-DD-DWG-TCS- 005B

REV. R3

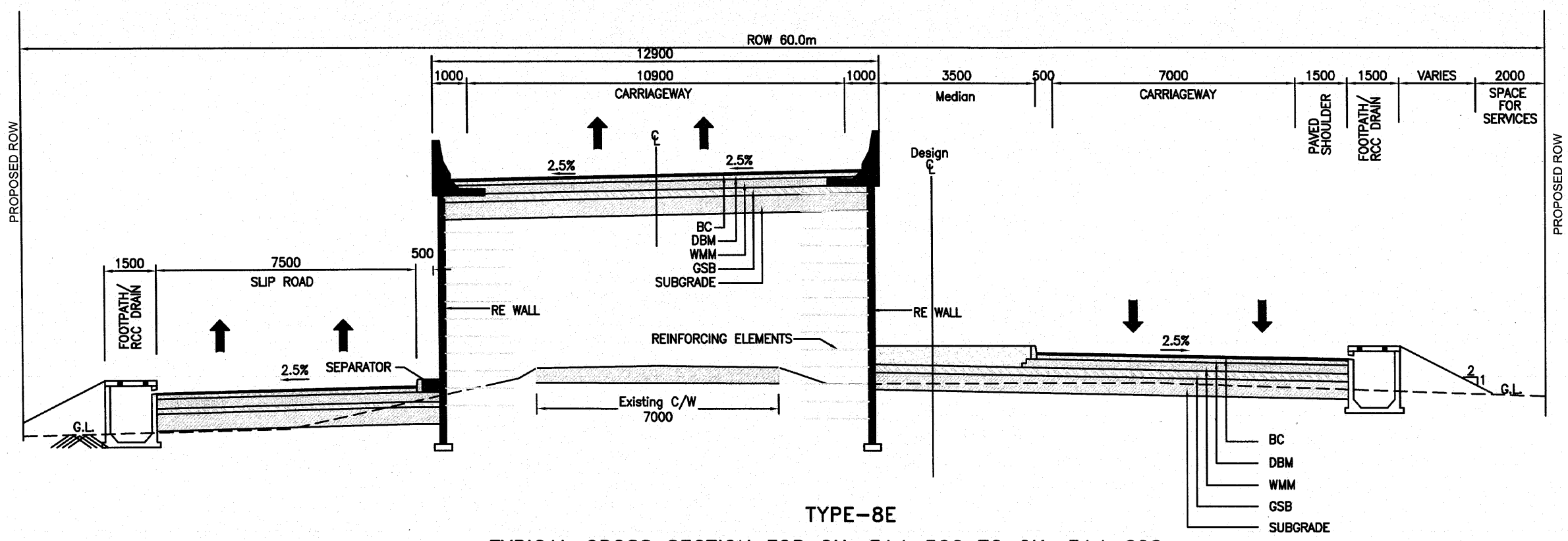

TYPE-8E

TYPICAL CROSS SECTION FOR CH: 314+500 TO CH: 314+600

Resident Engineer
STUP Consultants Pvt. Ltd.
Nagaon, Assam

Acting Team Leader
STUP Consultants Pvt. Ltd.
Nagaon, Assam

ght of Way (ROW) as shown in TCS is meant to indicate proposed cross section
highway shall be accommodated within ROW.
ctual Right of Way (ROW) has marked in Alignment Plan based on data provided
y AE vide letter ref: STUP / NH 37 / SIL / 2017 /01 dated 9 Feb 2017 and site meeting on 15 Feb 2017.
onstruction of Slip Road along with Associated works are under change of scope (COS).

FOR APPROVAL

Rev.	Date	Description of Revisions
R3	Nov 2022	As per Site Conditions
R2	Aug 2020	Service Road on RHS
R1	May 2018	Slip Road added & Alignment shifted
R0	November 2017	First Submission

Revisions

NATIONAL HIGHWAYS & INFRASTRUCTURE DEVELOPMENT CORPORATION LTD.	AUTHORITY'S ENGINEER: STUP Consultants P. Ltd & Ayoleeza Consultants P. Ltd.	PROOF CHECKED CONSULTANT:- CE TESTING Company Pvt. Ltd	SAEFTY CONSULTANT:- Chaitanya Projects Consultancy Pvt. Ltd
	AUTHORISED SIGNATORY / DATE	AUTHORISED SIGNATORY / DATE	AUTHORISED SIGNATORY / DATE

PROJECT: FOUR LANING OF NH-37 FROM RANGAGARA TO KALIABOR TINIALI (CH: 297.000 KM TO CH: 315.315 KM) IN NAGAON DISTRICT IN THE STATE OF ASSAM UNDER SARDP-NE, PHASE A ON EPC MODE

EPC CONTRACTOR:- SIMPLEX INFRASTRUCTURES LIMITED, 27, SHAKESPEARE SARANI, KOLKATA-17, INDIA

CONSULTANTS:- AECOM, 9th Floor, Infinity Tower C DLF Cyber City, DLF Phase II, Gurgaon-122002, Haryana, India

DRAWN	DESIGN	CHECKED BY (Team Leader: SL)	APPROVED BY (Design Director: MSR)

SCALE:- 1 : 1000

TITLE:- TYPICAL CROSS SECTION (TYPE-8E)

DRAWING NO.:- AECOM-DELD15159-DD-DWG-TCS- 005A

REV. R3

NATIONAL HIGHWAYS & INFRASTRUCTURE
DEVELOPMENT CORPORATION LTD.

Four Laning of NH – 37 from Rangagara to Kaliabor Tiniali (Ch: 297.000 Km to Ch:315.315 Km of NH-37) in Nagaon District in the State of Assam under SARDP – NE, Phase A, on EPC Basis




FLYOVER

(AT DESIGN CH.314+992)

REVISED FOUNDATION AND SUBSTRUCTURE DRAWINGS (A1, P1 To P14 & A2)
AS PER PLAN & PROFILE REVISION R2

CONTRACTOR:-

SIMPLEX INFRASTRUCTURES LIMITED

AUTHORITY'S ENGINEER:-

STUP Consultants P.Ltd
&
Ayoleeza Consultants P.Ltd

CONSULTANTS:-

AECOM
AECOM India Private Limited

SEPTEMBER 2018

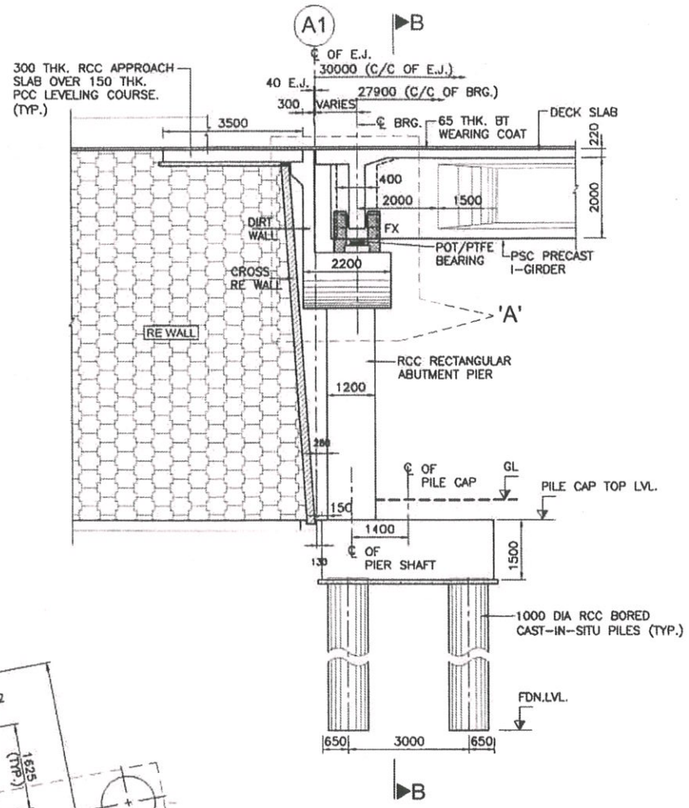

LONGITUDINAL ELEVATION

(SCALE 1:100)

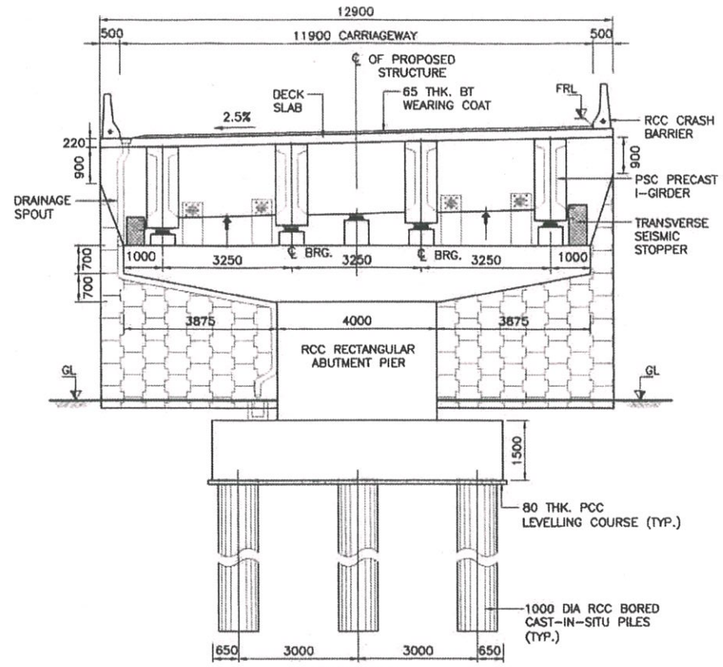

VIEW-BB

(SCALE : 1:100)

NOTES:-

1. ALL DIMENSIONS ARE IN MILLIMETERS, LEVELS ARE IN METERS UNLESS OTHERWISE MENTIONED.
2. NO DIMENSION SHALL BE MEASURED FROM THE DRAWINGS. ONLY WRITTEN DIMENSIONS SHALL BE FOLLOWED.
3. THE REINFORCEMENT SHALL BE HYSD BARS OF GRADE DESIGNATION Fe 500D CONFORMING TO IS 1786–2008.
4. CONCRETE SHALL BE DESIGN MIX WITH A MINIMUM 28 DAYS CHARACTERISTIC CUBE STRENGTH FOR DIFFERENT ELEMENTS AS FOLLOWS:
   - a.RCC ABUT. & ABUT. CAP — M35
   - b.RCC PILE & PILE CAP — M35
   - c.RCC CRASH BARRIER — M40
   - d.PCC LEVELING COURSE — M15
   - e.RCC PEDESTALS — M40
   - f.RCC SEISMIC STOPPER — M35
5. CLEAR COVER TO OUTER STEEL SHALL BE AS FOLLOWS:–
   - a.RCC ABUT. STEM — 40MM
   - b.RCC ABUT. CAP — 40MM
   - c.RCC SEISMIC STOPPERS — 40MM
   - d.RCC PILE & PILE CAP — 75MM
   - e.RCC CRASH BARRIER — 40MM
6. LAPPING OF REINFORCEMENT SHALL BE AVOIDED AS FAR AS POSSIBLE. IN CASE LAPPING OF BARS BECOME UNAVOIDABLE, NOT MORE THAN 50% OF BARS SHALL BE LAPPED AT A SECTION. LAP LENGTH SHALL BE PROVIDED AS PER CLAUSE 15.2.5 IRC:112–2011:
   - * 1.5x36ø (GRADE M35) FAVOURABLE CONDITION
   - * 1.5x1.43x36ø (GRADE M35) UNFAVOURABLE CONDITION
7. ANCHORAGE LENGTH SHALL BE AS PER CLAUSE 15.2.3 & 15.2.4, IRC:112–2011:
   - * 36ø (GRADE M35) FAVORABLE CONDITION
   - * 1.43x36ø (GRADE M35) UNFAVORABLE CONDITION

LEVEL DETAILS

LEVELS	FOR LHS C/W
	A1
FRL	73.711
ABUTMENT CAP TOP LVL.	70.796
GL (FRL OF RME)	68.352
PILE CAP TOP LVL.	67.602
FDN. LEVEL	36.102
ALL LEVELS SHALL BE VERIFIED WITH PLAN & PROFILE AND SITE BEFORE EXECUTION OF WORK.	

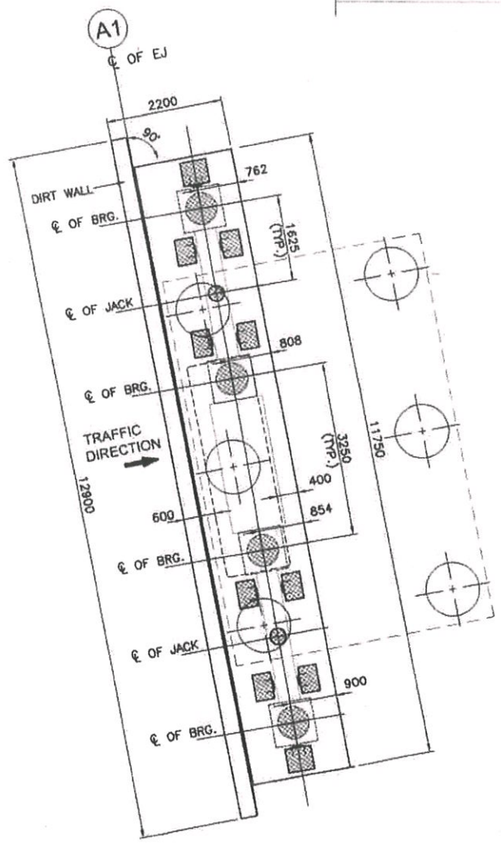

PLAN OF ABUTMENT CAP-A1

(SCALE 1:75)

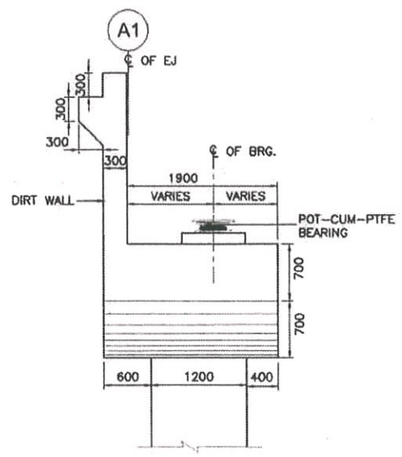

DETAIL-'A'

(SCALE : 1:50)

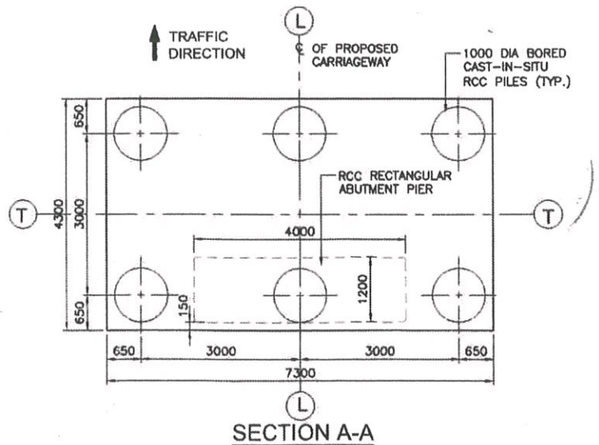

SECTION A-A

PLAN OF ABUTMENT, PILE CAP & PILES

(SCALE 1:75)

REFERENCE DRAWINGS

1.) GENERAL ARRANGEMENT DRAWING:–
AECOM–DELD15159–DD–DWG–FO–314+747–GAD–01

2.) SUPERSTRUCTURE:–
AECOM–DELD15159–DD–DWG–FO–314+747–SUP–01

3.) SUBSTRUCTURE:–
AECOM–DELD15159–DD–DWG–FO–314+747–SUB–02
AECOM–DELD15159–DD–DWG–FO–314+747–SUB–03
AECOM–DELD15159–DD–DWG–FO–314+747–SUB–04

LEGEND:-

- – BEARING IN PLAN
- – POT–CUM–PTFE BEARING IN ELEVATION
- – JACK LOCATION IN PLAN
- – JACK LOCATION IN ELEVATION
- BRG – BEARING
- EJ – EXPANSION JOINT
- LVL – LEVEL
- ABUT – ABUTMENT
- FRL – FINISHED ROAD LEVEL
- FDN – FOUNDATION
- LVL – LEVEL
- C/W – CARRIAGEWAY
- BT – BITUMINOUS

Resident Engineer, STUP Consultants Pvt. Ltd. Nagaon, Assam

FOR APPROVAL

Rev.	Date	Description on Revisions
R1	29-08-2018	AS PER REVISED PLAN & PROFILE REVISION R2
R0	29-01-2018	FIRST SUBMISSION

Revisions

CLIENT:- NATIONAL HIGHWAYS & INFRASTRUCTURE DEVELOPMENT COPORATION LTD.

AUTHORITY'S ENGINEER: STUP Consultants P. Ltd & Ayoleeza Consultants P. Ltd. — AUTHORISED SIGNATORY — DATE

PROOF CHECK CONSULTANT: CETEM — AUTHORISED SIGNATORY — DATE 19/9/18

SAFETY CONSULTANT:- Chaitanya Projects Consultancy Pvt. Ltd — AUTHORISED SIGNATORY — DATE

PROJECT: FOUR LANING OF NH-37 FROM RANGAGARA TO KALIABOR TINIALI (CH: 297.000 KM TO CH: 315.315 KM) IN NAGAON DISTRICT IN THE STATE OF ASSAM UNDER SARDP-NE, PHASE A ON EPC MODE

EPC CONTRACTOR:- SIMPLEX INFRASTRUCTURES LIMITED, 27, SHAKESPEARE SARANI, KOLKATA-17, INDIA

CONSULTANTS:- AECOM, 9th Floor, Infinity Tower C, DLF Cyber City, DLF Phase II, Gurgaon-122002, Haryana, India — DRAWN — DESIGN — CHECKED BY — APPROVED BY

SCALE: AS SHOWN

TITLE: DIMENSION & REINFORCEMENT DETAILS OF ABUTMENT & FOUNDATION FOR A1 & A2 FOR FLYOVER AT CH.'314+992 (SCH-B CH. 314+747)

DRAWING NO.:- AECOM-DELD15159-DD-DWG-FO-314+747-SUB-01 (SH 1 OF 6) — REV: R1

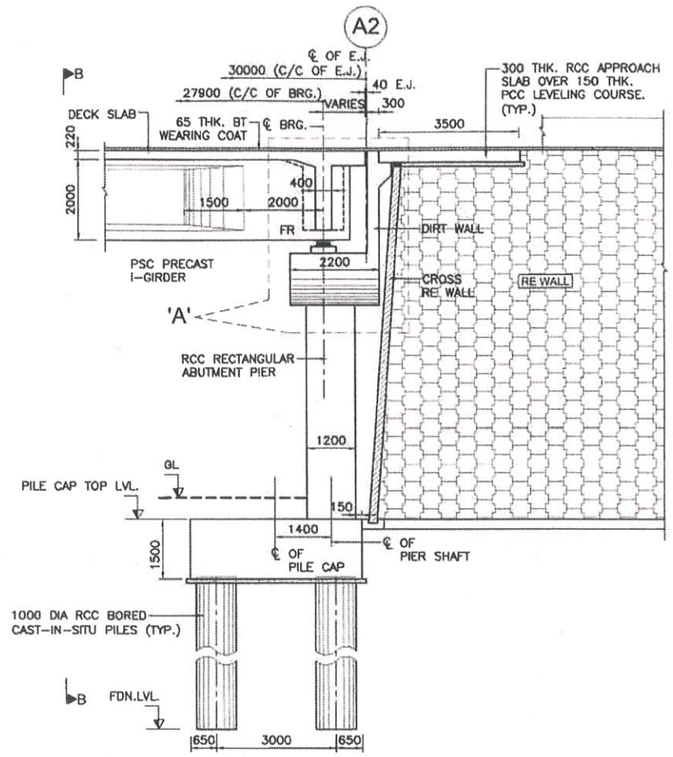

LONGITUDINAL ELEVATION

(SCALE 1:100

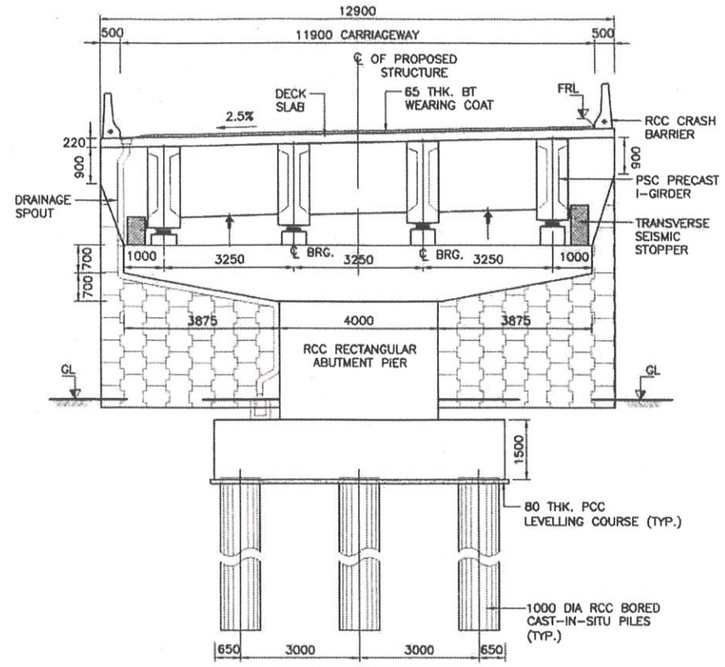

VIEW-BB

(SCALE : 1:100)

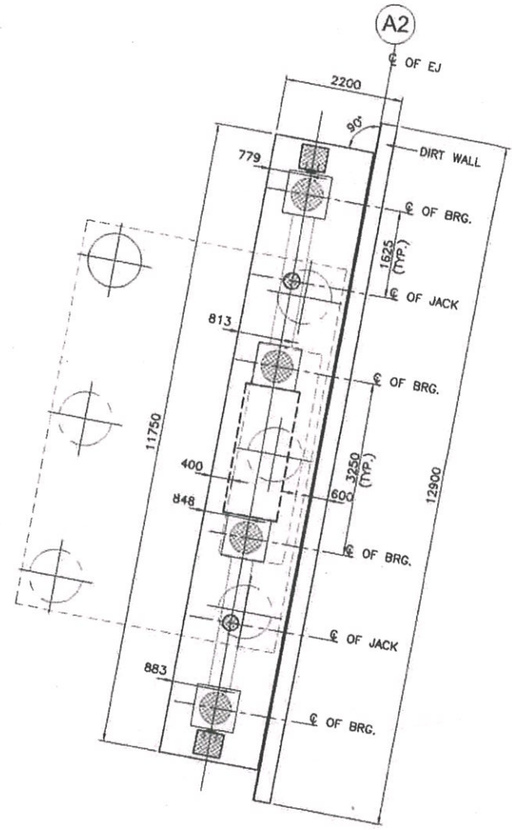

PLAN OF ABUTMENT CAP-A2

(SCALE 1:75)

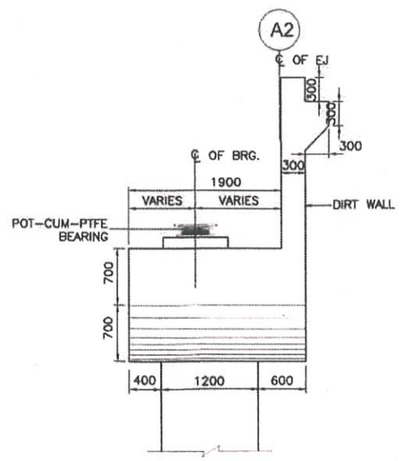

DETAIL-'A'

(SCALE : 1:50)

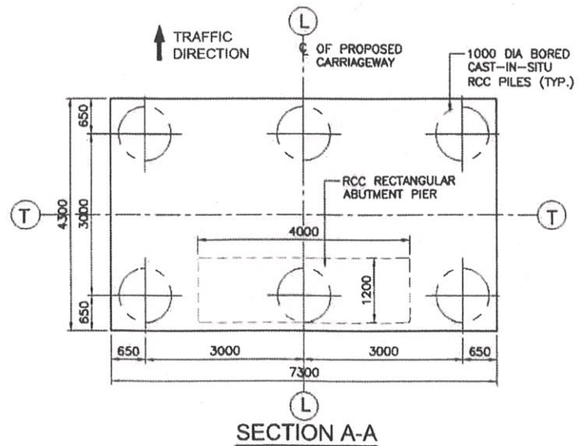

SECTION A-A

PLAN OF ABUTMENT, PILE CAP & PILES

(SCALE 1:75)

LEVEL DETAILS

LEVELS	FOR LHS C/W
	A2
FRL	73.949
ABUTMENT CAP TOP LVL.	71.033
GL (FRL OF RME)	68.590
PILE CAP TOP LVL.	67.840
FDN. LEVEL	36.340
ALL LEVELS SHALL BE VERIFIED WITH PLAN & PROFILE AND SITE BEFORE EXECUTION OF WORK.	

Resident Engineer
STUP Consultants Pvt. Ltd.
Nagaon, Assam

FOR APPROVAL

Rev.	Date	Description of Revisions
R1	29-08-2018	AS PER REVISED PLAN & PROFILE REVISION R2
R0	29-01-2018	FIRST SUBMISSION

Revisions

CLIENT:- NATIONAL HIGHWAYS & INFRASTRUCTURE DEVELOPMENT COPORATION LTD.

AUTHORITY'S ENGINEER: STUP Consultants P. Ltd & Ayoleeza Consultants P. Ltd.

PROOF CHECK CONSULTANT: CETEST 92

SAEFTY CONSULTANT:- Chaitanya Projects Consultancy Pvt. Ltd

PROJECT: FOUR LANING OF NH-37 FROM RANGAGARA TO KALIABOR TINIALI (CH: 297.000 KM TO CH: 315.315 KM) IN NAGAON DISTRICT IN THE STATE OF ASSAM UNDER SARDP-NE, PHASE A ON EPC MODE

EPC CONTRACTOR:- SIMPLEX INFRASTRUCTURES LIMITED, 27, SHAKESPEARE SARANI, KOLKATA-17, INDIA

CONSULTANTS: AECOM India Private Limited, Gurgaon

SCALE:- AS SHOWN

TITLE:- DIMENSION & REINFORCEMENT DETAILS OF ABUTMENT & FOUNDATION FOR A1 & A2 FOR FLYOVER AT CH. 314+992 (SCH-B CH. 314+747)

DRAWING NO.:- AECOM-DELD15159-DD-DWG-FO-314+747-SUB-01 (SH 2 OF 6) REV: R1

AUTHORISED SIGNATORY	DATE	AUTHORISED SIGNATORY	DATE	AUTHORISED SIGNATORY	DATE

DRAWN	DESIGN	CHECKED BY	APPROVED BY

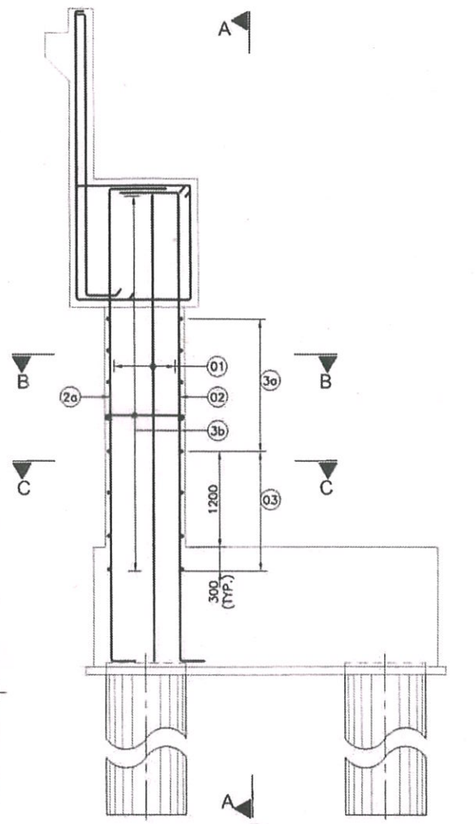

REINFORCEMENT DETAILS OF ABUTMENT
(SCALE 1:50)

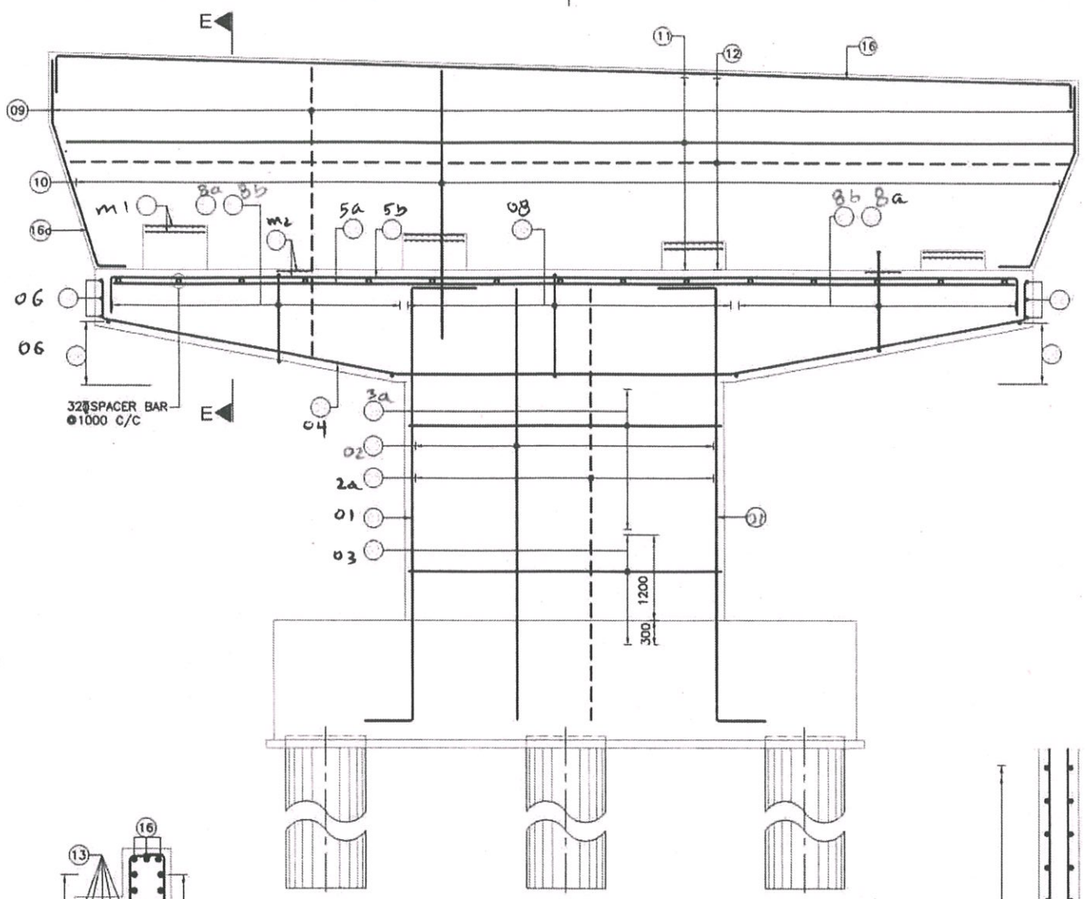

SECTION A-A

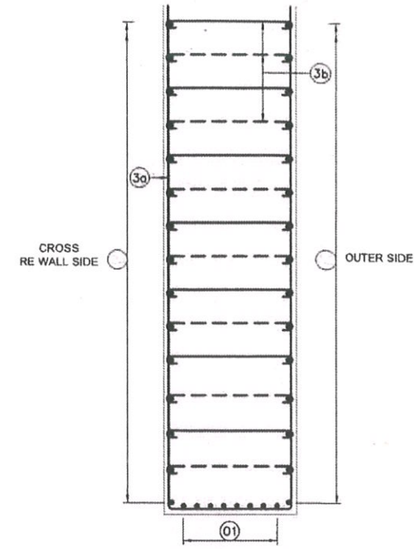

SECTION B-B
(SCALE 1:30)

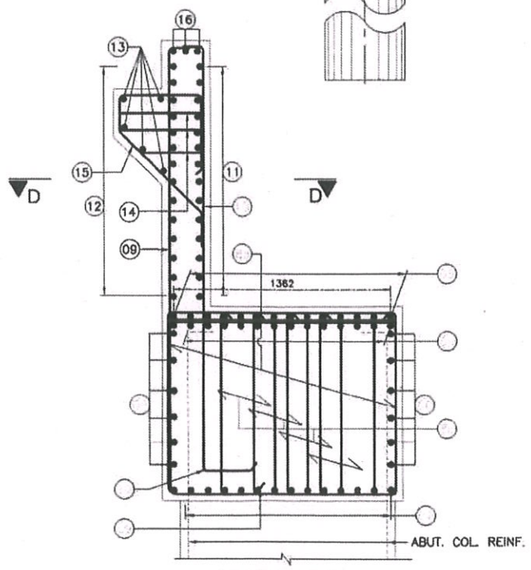

SECTION E-E
(SCALE 1:25)

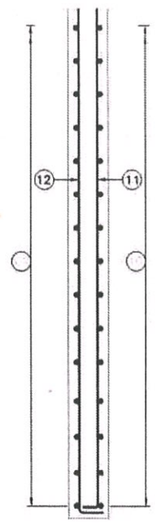

SECTION D-D
(SCALE 1:30)

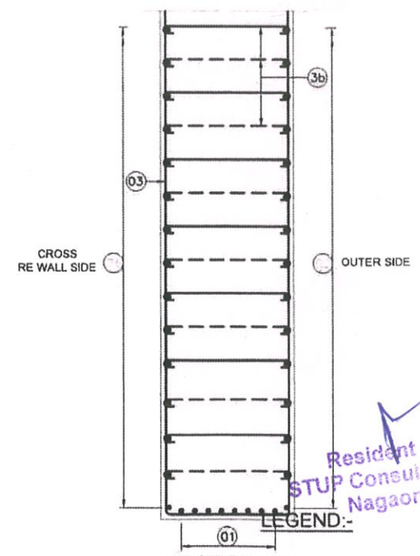

SECTION C-C
(SCALE 1:30)

LEGEND:-

- - - - - - CROSS RE WALL SIDE

——— OTHER SIDE

Resident Engineer
STUP Consultants Pvt. Ltd.
Nagaon, Assam

FOR APPROVAL

Rev.	Date	Description on Revisions
R0	29-01-2018	FIRST SUBMISSION

Revisions

CLIENT:- NATIONAL HIGHWAYS & INFRASTRUCTURE DEVELOPMENT CORPORATION LTD

AUTHORITY'S ENGINEER: STUP Consultants P. Ltd & Ayoleeza Consultants P. Ltd.
AUTHORISED SIGNATORY | DATE

PROOF CHECK CONSULTANT: CETEST
AUTHORISED SIGNATORY | DATE

SAEFTY CONSULTANT:- Chaitanya Projects Consultancy Pvt. Ltd
AUTHORISED SIGNATORY | DATE

PROJECT: FOUR LANING OF NH-37 FROM RANGAGARA TO KALIABOR TINIALI (CH: 297.000 KM TO CH: 315.315 KM) IN NAGAON DISTRICT IN THE STATE OF ASSAM UNDER SARDP-NE, PHASE A ON EPC MODE

EPC CONTRACTOR:- SIMPLEX INFRASTRUCTURES LIMITED, 27, SHAKESPEARE SARANI, KOLKATA-17, INDIA

CONSULTANTS: AECOM India Private Limited, Gurgaon
9th Floor, Infinity Tower C, DLF Cyber City, DLF Phase II, Gurgaon-122002, Haryana, India
K. DEBNATH (DRAWN) | A.P. SINGH (DESIGN) | S. YADAV (CHECKED BY) | K. KARTIGA (APPROVED BY)

SCALE:- AS SHOWN

TITLE:- DIMENSION & REINFORCEMENT DETAILS OF ABUTMENT & FOUNDATION FOR A1 & A2 FOR FLYOVER AT CH. 314+992 (SCH-B CH. 314+747)

DRAWING NO.:- AECOM-DELD1b159I-DD-DWG-FD-314+747-SUB-01 (SH 3 OF 6) | REV: R0

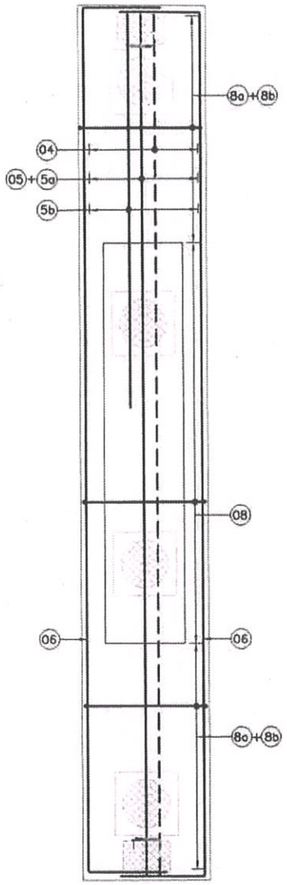

TOP PLAN OF ABUTMENT CAP
(SCALE 1:50)

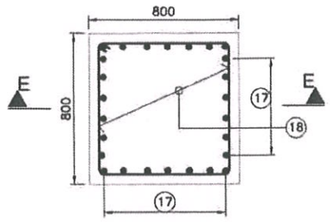

PLAN
(SHOWING REINF. IN FREE BRG. PEDESTAL)
(SCALE 1:20)

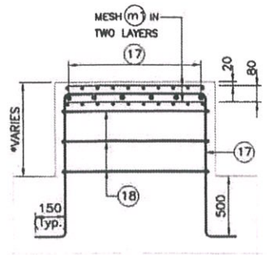

SECTION E-E
(*MINIMUM=350-HT. OF BRG.)
(SCALE 1:20)

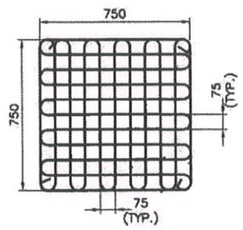

8 ϕ MESH (m1) FOR PEDESTAL
(UNDER BEARING LOCATION TWO LAYERS ONE AT 20MM & ANOTHER AT 80MM FROM TOP)
(SCALE: 1:20)

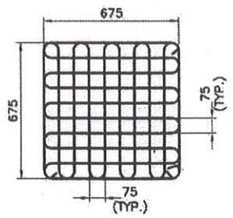

8 ϕ MESH (m2)
(UNDER JACK LOCATION TWO LAYERS ONE AT 20MM & ANOTHER AT 80MM FROM TOP)
(SCALE 1:20)

BAR SHAPE SCHEDULE

BAR MARK	DESCRIPTION	BAR SHAPE	REMARKS	
01	20ϕ–8 Nos	300 300		ABUTMENT SHAFT
02	32ϕ–40 Nos.	300 300		
2a	32ϕ–40 Nos.	300 300		
03	20ϕ @120 c/c			
3a	16ϕ @200 c/c			
3b	8ϕ @200 c/c		STAGGERED ALONG HEIGHT	
04				ABUTMENT CAP
05				
5a				
5b				
06				
07				
08	2L–16ϕ @120c/c		STIRRUPS	
8a	2L–16ϕ @120c/c		STIRRUPS	
8b	8L–16ϕ @120c/c		STIRRUPS	
09	12ϕ @100 c/c	150 500		DIRT WALL & BRACKET
10	12ϕ @100 c/c	150 200		
11	12ϕ @200 c/c	150 150		
12	12ϕ @200 c/c	150 150		
13	12ϕ–5 Nos.			
14	2L–10ϕ @400c/c	400 200	STIRRUPS	
15	12ϕ @100 c/c	400 300		
16	12ϕ–3 Nos.	500 500		
16a	12ϕ–3 Nos.	900 200		
17	12ϕ @150 c/c	150 150		PEDESTAL
18	12ϕ @150 c/c		STIRRUPS	

IMPORTANT NOTE:
REINFORCEMENT DETAILS TO BE REFERRED ONLY FROM TABLE

LEGEND:-
- - - - - - BOTTOM REINF.
——— TOP REINF.

Resident Engineer
STUP Consultants Pvt. Ltd.
Nagaon, Assam

FOR APPROVAL

Rev.	Date	Description on Revisions
R0	29-01-2018	FIRST SUBMISSION

Revisions

CLIENT:- NATIONAL HIGHWAYS & INFRASTRUCTURE DEVELOPMENT CORPORATION LTD

AUTHORITY'S ENGINEER: STUP Consultants P. Ltd & Ayoleeza Consultants P. Ltd.
AUTHORISED SIGNATORY | DATE

PROOF CHECK CONSULTANT:- SECRETO
AUTHORISED SIGNATORY | DATE

SAFETY CONSULTANT:- Chaitanya Projects Consultancy Pvt. Ltd
AUTHORISED SIGNATORY | DATE

PROJECT: FOUR LANING OF NH-37 FROM RANGAGARA TO KALIABOR TINIALI (CH: 297.000 KM TO CH: 315.315 KM) IN NAGAON DISTRICT IN THE STATE OF ASSAM UNDER SARDP-NE. PHASE A ON EPC MODE

EPC CONTRACTOR:- SIMPLEX INFRASTRUCTURES LIMITED, 27, SHAKESPEARE SARANI, KOLKATA-17, INDIA

CONSULTANT:- AECOM India Private Limited, 4th Floor, Infinity Tower C, DLF Cyber City, DLF Phase II, Gurgaon-122002, Haryana, India

DRAWN	DESIGN	CHECKED BY	APPROVED BY
R. BERMAL	A.P. SINGH	S. YADAV	S. PANDAY

SCALE:- AS SHOWN

TITLE:- DIMENSION & REINFORCEMENT DETAILS OF ABUTMENT & FOUNDATION FOR A1 & A2 FOR FLYOVER AT CH. 314+992 (SCH-B CH. 314+747)

DRAWING NO.:- AECOM-DELD15159-DD-DWG-FO-314+747-SUB-01 (SH 4 OF 6)

REV: R0

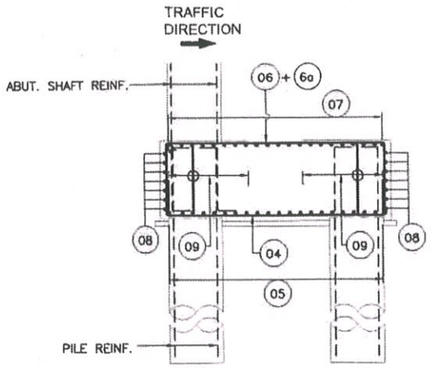

SECTION A-A
(SCALE 1:75)

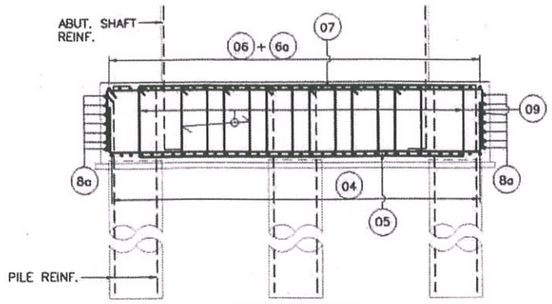

SECTION B-B
(SCALE 1:75)

BAR SHAPE SCHEDULE

BAR MRKD.	DESCRIPTION	BAR SHAPE	
	32ϕ–10 Nos.	350	PILE
	32ϕ–10 Nos.	350	PILE
	16ϕ@120c/c		PILE
	12ϕ@120c/c		PILE
	NOT IN USE		
	20ϕ@110c/c	000 000	PILE CAP
	20ϕ@110c/c	000 000	PILE CAP
	20ϕ@220c/c	000 000	PILE CAP
	20ϕ@220c/c	1000 1000	PILE CAP
	12ϕ@110c/c	1000 1000	PILE CAP
	12ϕ@200c/c	300 300	PILE CAP
	12ϕ@200c/c	300 300	PILE CAP
	4L–12ϕ (PER M WIDTH) IN TRANSV. DIRECTION @140c/c IN TRAFFIC DIRECTION		PILE CAP

IMPORTANT NOTE:
REINFORCEMENT DETAILS TO BE REFERRED ONLY FROM TABLE

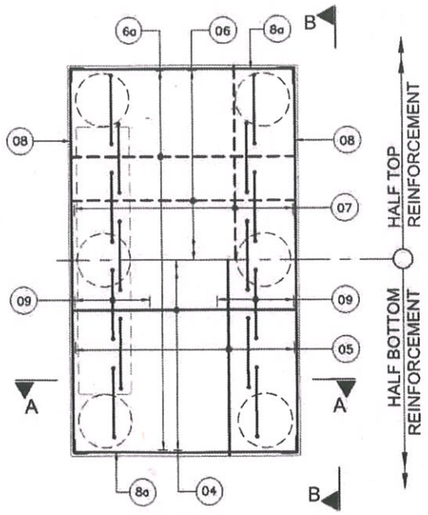

TOP PLAN OF PILE CAP
(SCALE 1:75)

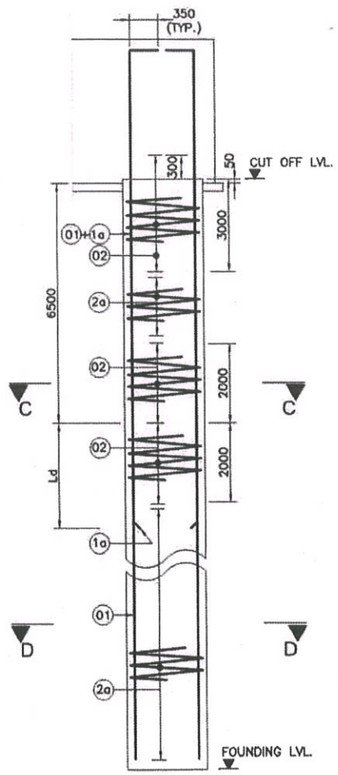

REINF. DETAILS OF PILE SHAFT
(SCALE 1:50)

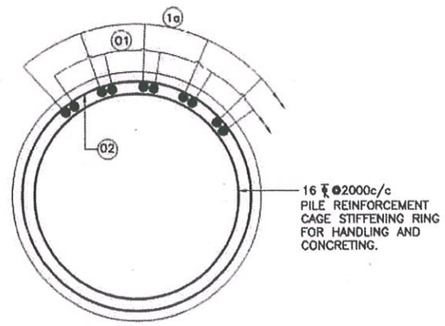

SECTION C-C
(SCALE 1:20)

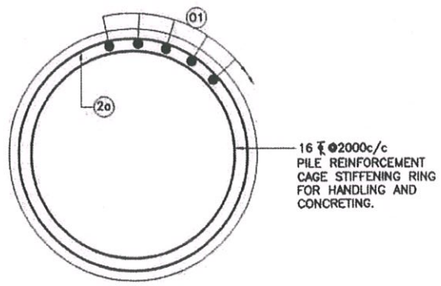

SECTION D-D
(SCALE 1:20)

LEGEND:-
- - - - - - BAR ON TOP FACE
——— BAR ON BOTTOM FACE

Ld = 1.43 x 36 x 32 x $2^{0.5}$ = 2500MM (APPROX.)

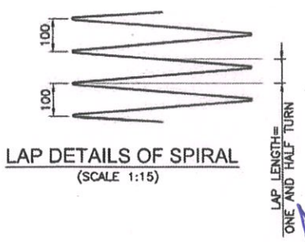

LAP DETAILS OF SPIRAL
(SCALE 1:15)

LOCATION	LENGTH OF PILE (m)	DESIGN VERTICAL LOAD (t)		VERTICAL LOAD CARRYING CAPACITY (t) (AS PER GEOTECH REPORT)		LATERAL DEFLECTION OF PILE AT PILE TOP LEVEL (mm)	PERMISSIBLE LATERAL DEFLECTION OF PILE AT PILE TOP LEVEL (mm)
		NORMAL	SEISMIC	NORMAL	SEISMIC		
A1 & A2	30.0	206	287	310.0	387.5	1.0	10 R1

Resident Engineer
STUP Consultants Pvt. Ltd.
Nagaon, Assam

FOR APPROVAL

Rev.	Date	Description on Revisions
R1	29-08-2018	REVISED AS MARKED 'R1'
R0	29-01-2018	FIRST SUBMISSION

Revisions

CLIENT:- NATIONAL HIGHWAYS & INFRASTRUCTURE DEVELOPMENT CORPORATION LTD

AUTHORITY'S ENGINEER: STUP Consultants P. Ltd & Ayoleeza Consultants P. Ltd.
AUTHORISED SIGNATORY | DATE

PROOF CHECK CONSULTANT: CBRI
AUTHORISED SIGNATORY | DATE

SAEFTY CONSULTANT:- Chaitanya Projects Consultancy Pvt. Ltd
AUTHORISED SIGNATORY | DATE

PROJECT: FOUR LANING OF NH-37 FROM RANGAGARA TO KALIABOR TINIALI (CH: 297.000 KM TO CH: 315.315 KM) IN NAGAON DISTRICT IN THE STATE OF ASSAM UNDER SARDP-NE, PHASE A ON EPC MODE

EPC CONTRACTOR:- SIMPLEX INFRASTRUCTURES LIMITED, 27, SHAKESPEARE SARANI, KOLKATA-17, INDIA

CONSULTANTS: AECOM India Pvt. Ltd.
9th Floor, Infinity Tower C, DLF Cyber City, DLF Phase II, Gurgaon-122002, Haryana, India
DRAWN | DESIGN | CHECKED BY | APPROVED BY

SCALE:- AS SHOWN

TITLE:- DIMENSION & REINFORCEMENT DETAILS OF ABUTMENT & FOUNDATION FOR A1 & A2 FOR FLYOVER AT CH. 314+992 (SCH-B CH. 314+747)

DRAWING NO.:- AECOM-DELD15159-DD-DWG-FO-314+747-SUB-01 (SH 5 OF 6) | REV: R1

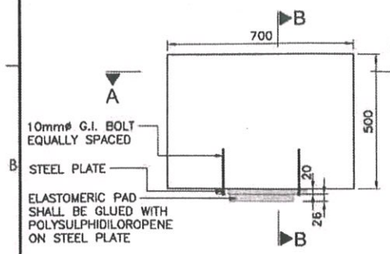

PLAN
(TRANSVERSE SEISMIC STOPPER)
(SCALE 1:15)

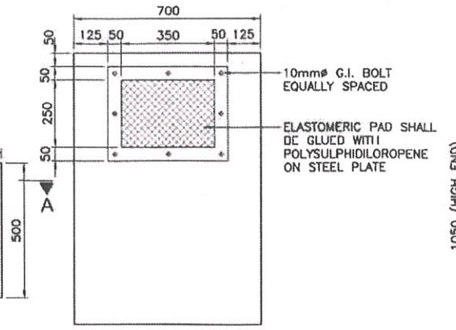

SECTION A-A
(TRANSVERSE SEISMIC STOPPER)
(SCALE 1:15)

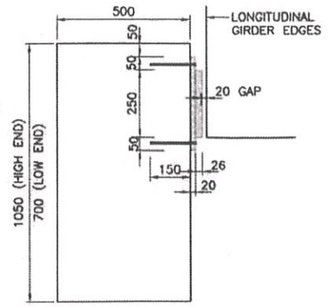

SECTION B-B
(TRANSVERSE SEISMIC STOPPER)
(SCALE 1:15)

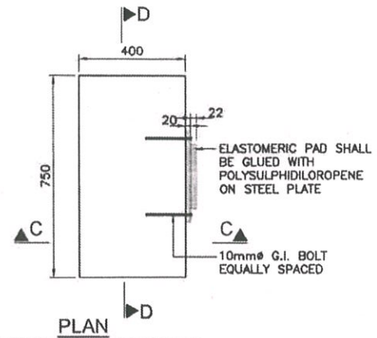

PLAN
(LONGITUDINAL SEISMIC STOPPER)
(SCALE 1:15)

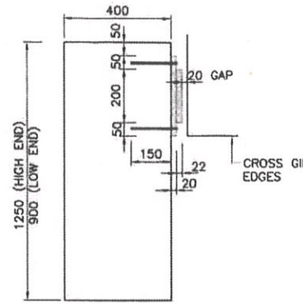

SECTION C-C
(LONGITUDINAL SEISMIC STOPPER)
(SCALE 1:15)

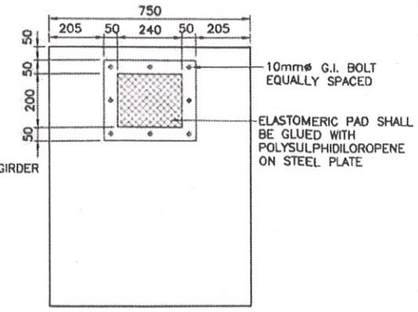

SECTION D-D
(LONGITUDINAL SEISMIC STOPPER)
(SCALE 1:15)

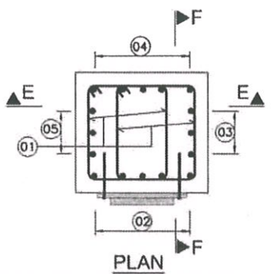

PLAN
(REINF. IN TRANSVERSE SEISMIC STOPPER)
(SCALE 1:15)

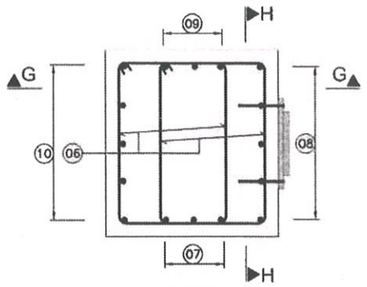

PLAN
(REINF. IN LONGITUDINAL SEISMIC STOPPER)
(SCALE 1:15)

BAR SHAPE SCHEDULE

BAR MRKD.	DESCRIPTION	BAR SHAPE	REMARKS
01	4L-12ϕ@80 C/C		
02	32ϕ-5 NOS.	100 800	
03	12ϕ-4 NOS.	100 800	
04	16ϕ-5 NOS.	100 800	
05	12ϕ-4 NOS.	100 800	
06	4L-12ϕ@120 C/C		
07	12ϕ-4 NOS.	100 800	
08	25ϕ-6 NOS.	100 800	
09	12ϕ-4 NOS.	100 800	
10	12ϕ-6 NOS.	100 800	

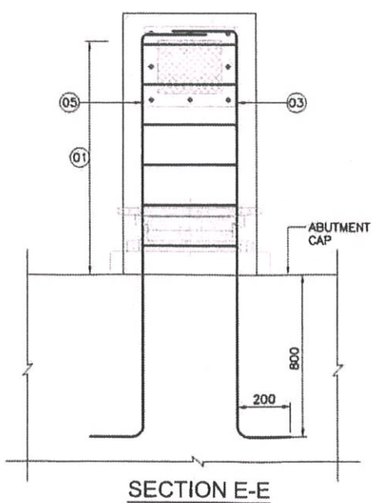

SECTION E-E
(SCALE 1:15)

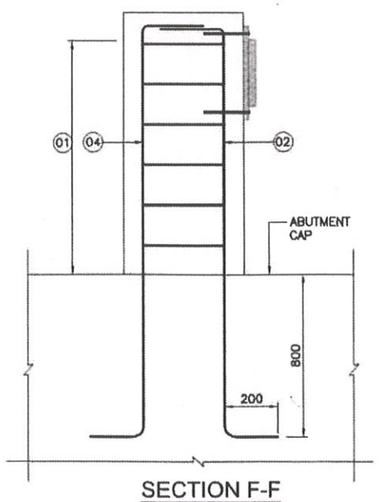

SECTION F-F
(SCALE 1:15)

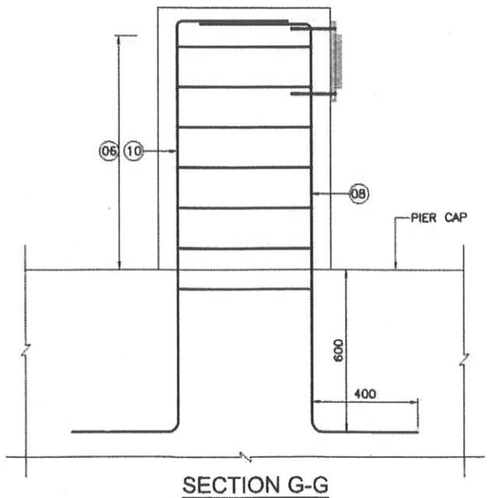

SECTION G-G
(SCALE 1:15)

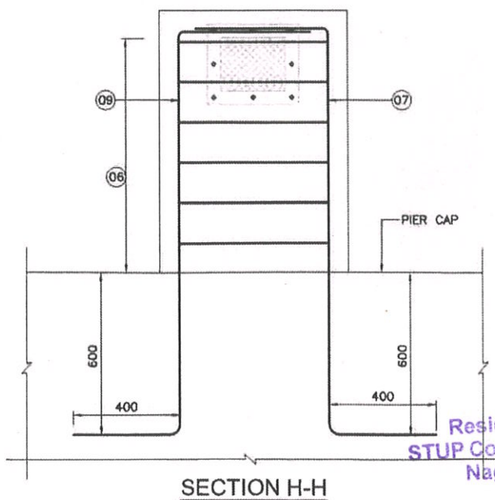

SECTION H-H
(SCALE 1:15)

Resident Engineer
STUP Consultants Pvt. Ltd.
Nagaon, Assam

FOR APPROVAL

Rev.	Date	Description on Revisions
R0	29-01-2018	FIRST SUBMISSION

Revisions

CLIENT:- NATIONAL HIGHWAYS & INFRASTRUCTURE DEVELOPMENT CORPORATION LTD

AUTHORITY'S ENGINEER: STUP Consultants P. Ltd & Ayoleeza Consultants P. Ltd.
AUTHORISED SIGNATORY | DATE

PROOF CHECK CONSULTANT: CESTA
AUTHORISED SIGNATORY | DATE

SAEFTY CONSULTANT:- Chaitanya Projects Consultancy Pvt. Ltd
AUTHORISED SIGNATORY | DATE

PROJECT: FOUR LANING OF NH-37 FROM RANGAGARA TO KALIABOR TINIALI (CH: 297.000 KM TO CH: 315.315 KM) IN NAGAON DISTRICT IN THE STATE OF ASSAM UNDER SARDP-NE. PHASE A ON EPC MODE

EPC CONTRACTOR:- SIMPLEX INFRASTRUCTURES LIMITED, 27, SHAKESPEARE SARANI, KOLKATA-17, INDIA

CONSULTANTS:- AECOM India Pvt. Ltd.
DRAWN: R. BENERJEE | DESIGN: S. P. SINGH | CHECKED BY: S. SAGAR | APPROVED BY: B. Rastogi

SCALE:- AS SHOWN

TITLE:- DIMENSION & REINFORCEMENT DETAILS OF ABUTMENT & FOUNDATION FOR A1 & A2 FOR FLYOVER AT CH. 314+992 (SCH-B CH. 314+747)

DRAWING NO.:- AECOM-DELD15159-DD-DWG-FO-314+747-SUB-01 (SH 6 OF 6) | REV: R0

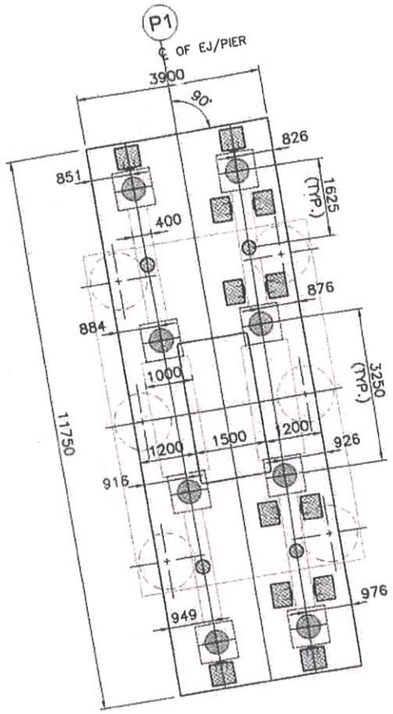

TOP PLAN OF PIER CAP-P1

(SCALE 1:75)

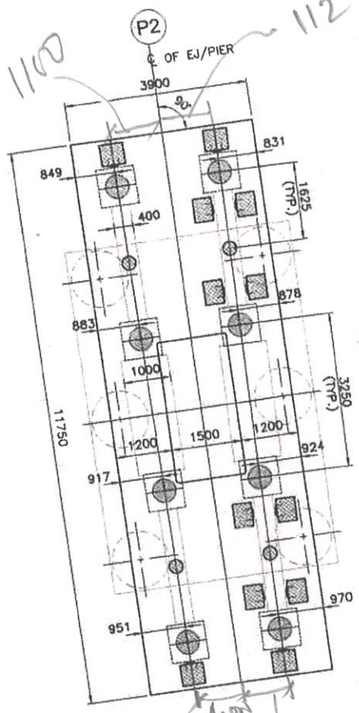

TOP PLAN OF PIER CAP-P2

(SCALE 1:75)

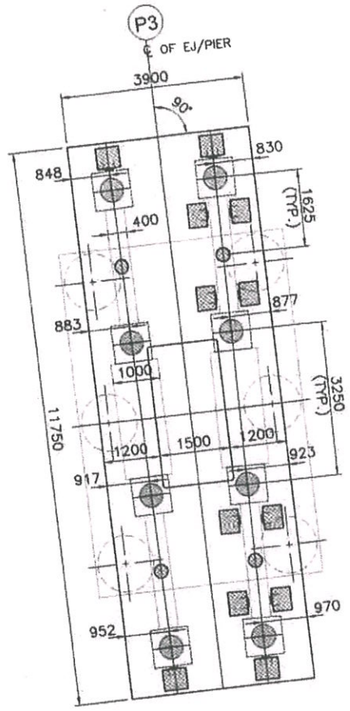

TOP PLAN OF PIER CAP-P3

(SCALE 1:75)

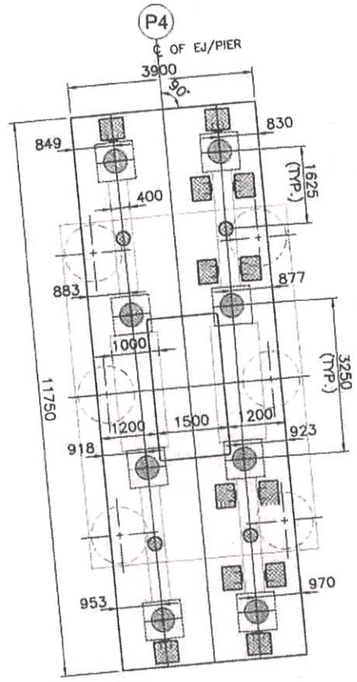

TOP PLAN OF PIER CAP-P4

(SCALE 1:75)

LEVEL DETAILS

LEVELS	PIER							
	P1	P2	P3	P4	P11	P12	P13	P14
FRL	74.307	74.903	75.498	76.076	76.274	75.737	75.141	74.545
PIER CAP TOP LVL.	71.392	71.988	72.582	73.160	73.358	72.821	72.225	71.629
GL (FRL OF RME)	68.340	68.364	68.431	68.509	68.826	68.849	68.862	68.781
PILE CAP TOP LVL.	67.590	67.614	67.681	67.759	68.076	68.099	68.112	68.031
FDN. LEVEL	36.090	36.114	36.181	36.259	36.576	36.599	36.612	36.531

ALL LEVELS SHALL BE VERIFIED AT SITE BEFORE EXECUTION OF WORK.

Resident Engineer
STUP Consultants Pvt. Ltd.
Nagaon, Assam

FOR APPROVAL

Rev.	Date	Description on Revisions
R1	29-08-2018	AS PER REVISED PLAN & PROFILE REVISION R2
R0	24-01-2018	FIRST SUBMISSION

Revisions

CLIENT:- NATIONAL HIGHWAYS & INFRASTRUCTURE DEVELOPMENT CORPORATION LTD

AUTHORITY'S ENGINEER: STUP Consultants P. Ltd & Ayoleeza Consultants P. Ltd.

AUTHORISED SIGNATORY | DATE

PROOF CHECK CONSULTANT: AUTHORISED SIGNATORY | DATE

SAEFTY CONSULTANT:- Chaitanya Projects Consultancy Pvt. Ltd

AUTHORISED SIGNATORY | DATE

PROJECT: FOUR LANING OF NH-37 FROM RANGAGARA TO KALIABOR TINJALI (CH: 297.000 KM TO CH: 315.315 KM) IN NAGAON DISTRICT IN THE STATE OF ASSAM UNDER SARDP-NE, PHASE A ON EPC MODE

EPC CONTRACTOR:- SIMPLEX INFRASTRUCTURES LIMITED, 23, SHAKESPEARE SARANI, KOLKATA-17, INDIA

CONSULTANTS:- AECOM India Private Limited, 9th Floor, Infinity Tower C, DLF Phase II, Gurgaon 122002, Haryana, India

NAMAN VERMA | DRAWN | DESIGN | CHECKED BY | S. RAOLAGI | APPROVED BY

SCALE:- AS SHOWN

TITLE:- DIMENSION & REINFORCEMENT DETAILS OF PIER & FOUNDATION FOR P1 TO P4 & P11 TO P14 FOR FLYOVER AT CH. 314+992 (SCH-B CH. 314+747)

DRAWING NO.:- AECOM-DELD15159-DD-DWG-FO-314+747-SUB-02 (SH 1 OF 6) | REV. R1

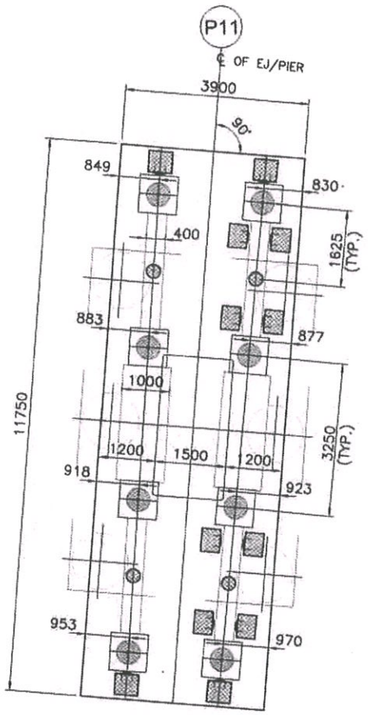

TOP PLAN OF PIER CAP-P11
(SCALE 1:75)

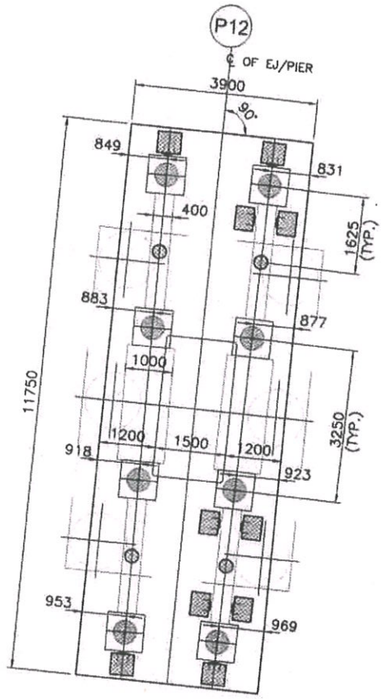

TOP PLAN OF PIER CAP-P12
(SCALE 1:75)

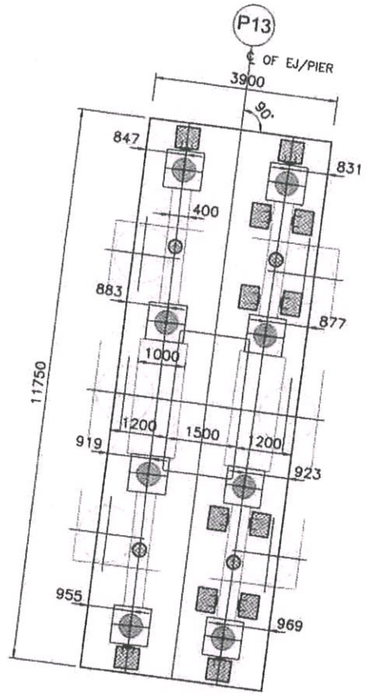

TOP PLAN OF PIER CAP-P13
(SCALE 1:75)

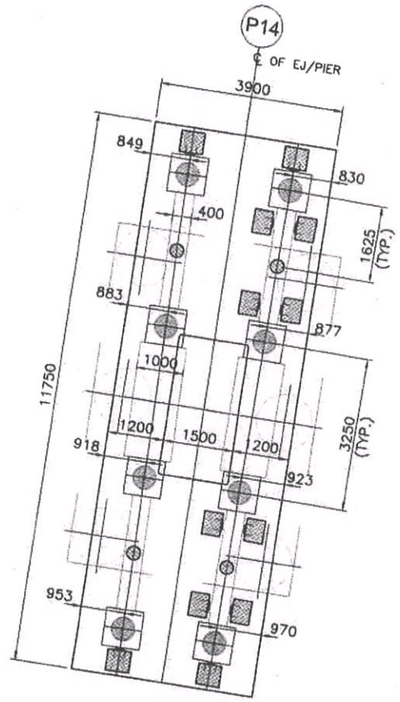

TOP PLAN OF PIER CAP-P14
(SCALE 1:75)

Resident Engineer
STUP Consultants Pvt. Ltd.
Nagaon, Assam

FOR APPROVAL

Rev.	Date	Description on Revisions
R0	24-01-2018	FIRST SUBMISSION

Revisions

CLIENT:- NATIONAL HIGHWAYS & INFRASTRUCTURE DEVELOPMENT CORPORATION LTD

AUTHORITY'S ENGINEER: STUP Consultants P. Ltd & Ayoleeza Consultants P. Ltd.
AUTHORISED SIGNATORY | DATE

PROOF CHECK CONSULTANT: C.T. TESTING CO. PVT. LTD. KOLKATA 700092
AUTHORISED SIGNATORY | DATE

SAFETY CONSULTANT:- Chaitanya Projects Consultancy Pvt. Ltd
AUTHORISED SIGNATORY | DATE

PROJECT: FOUR LANING OF NH-37 FROM RANGAGARA TO KALIABOR TINIALI (CH: 297.000 KM TO CH: 315.315 KM) IN NAGAON DISTRICT IN THE STATE OF ASSAM UNDER SARDP-NE. PHASE A ON EPC MODE

EPC CONTRACTOR:- SIMPLEX INFRASTRUCTURES LIMITED, 27, SHAKESPEARE SARANI, KOLKATA-17, INDIA

CONSULTANT:- AECOM India Private Limited, Gurgaon
DRAWN | DESIGN | CHECKED BY | APPROVED BY

SCALE:- AS SHOWN

TITLE:- DIMENSION & REINFORCEMENT DETAILS OF PIER & FOUNDATION FOR P1 TO P4 & P11 TO P14 FOR FLYOVER AT CH. 314+992 (SCH-8 CH. 314+747)

DRAWING NO.:- AECOM-DELD15159-DD-DWG-FO-314+747-SUB-02 (SH 2 OF 6)

REV. R0

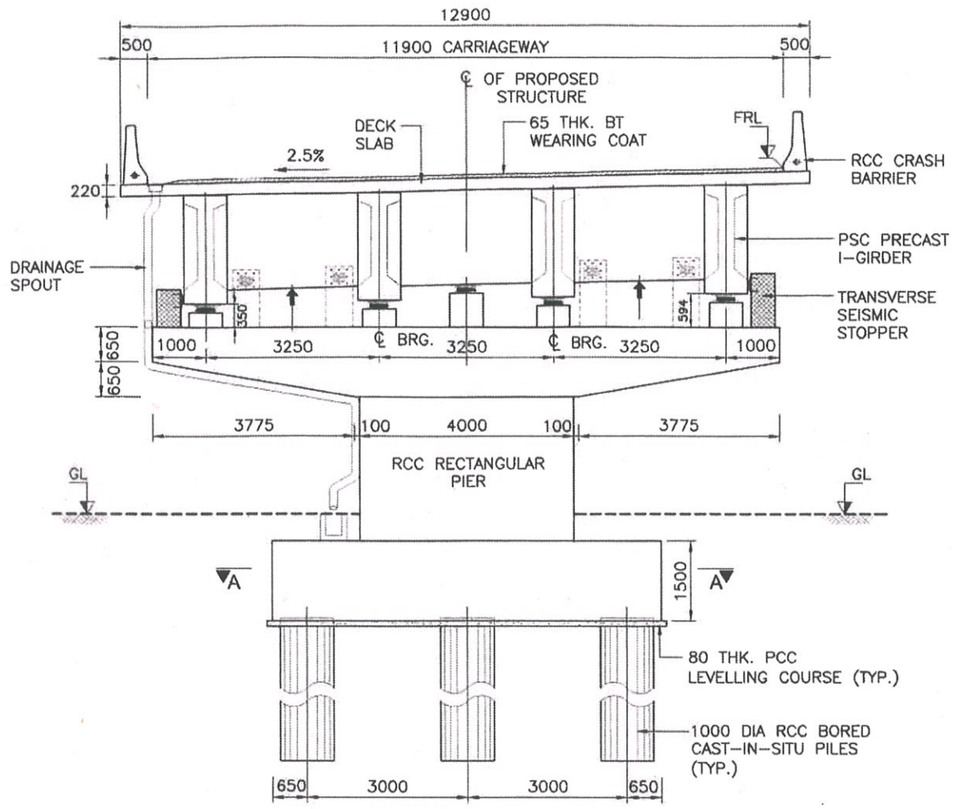

VIEW B-B
(SCALE : 1:100)

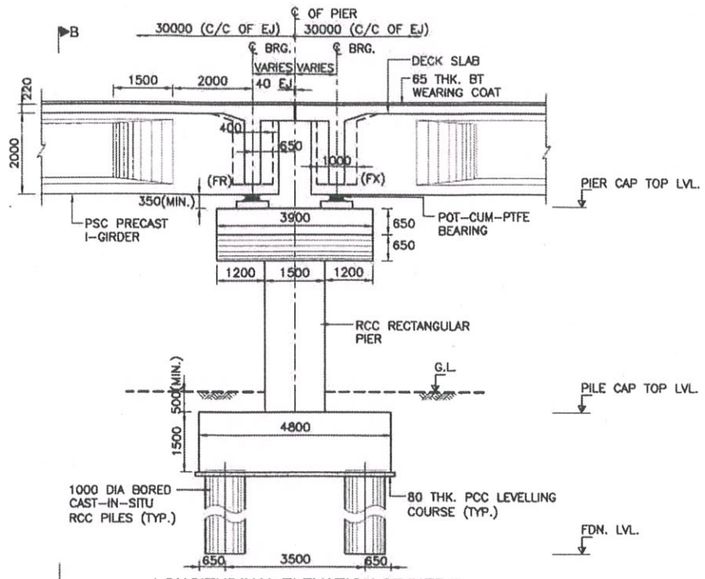

LONGITUDINAL ELEVATION OF PIER & FOOTING (AT PEIR P1 TO P4)
(SCALE 1:100)

NOTES:-

1. ALL DIMENSIONS ARE IN MILLIMETERS, LEVELS ARE IN METERS UNLESS OTHERWISE MENTIONED.
2. NO DIMENSION SHALL BE MEASURED FROM THE DRAWINGS. ONLY WRITTEN DIMENSIONS SHALL BE FOLLOWED.
3. THE REINFORCEMENT SHALL BE HYSD BARS OF GRADE DESIGNATION Fe 500D CONFORMING TO IS 1786-2008.
4. CONCRETE SHALL BE DESIGN MIX WITH A MINIMUM 28 DAYS CHARACTERISTIC CUBE STRENGTH FOR DIFFERENT ELEMENTS AS FOLLOWS:
   - a.RCC PIER & PIER CAP — M35
   - b.RCC PILE & PILE CAP — M35
   - c.RCC CRASH BARRIER — M40
   - d.PCC LEVELING COURSE — M15
   - e.RCC PEDESTALS — M40
   - f.RCC SEISMIC STOPPER — M35
5. CLEAR COVER TO OUTER STEEL SHALL BE AS FOLLOWS:-
   - a.RCC PIER STEM — 40MM
   - b.RCC PIER CAP — 40MM
   - c.RCC SEISMIC STOPPERS — 40MM
   - d.RCC PILE & PILE CAP — 75MM
   - e.RCC CRASH BARRIER — 40MM
6. LAPPING OF REINFORCEMENT SHALL BE AVOIDED AS FAR AS POSSIBLE. IN CASE LAPPING OF BARS BECOME UNAVOIDABLE, NOT MORE THAN 50% OF BARS SHALL BE LAPPED AT A SECTION. LAP LENGTH SHALL BE PROVIDED AS PER CLAUSE 15.2.5 IRC:112-2011:
   - * 1.5x36ø (GRADE M35) FAVOURABLE CONDITION
   - * 1.5x1.43x36ø (GRADE M35) UNFAVOURABLE CONDITION
7. ANCHORAGE LENGTH SHALL BE AS PER CLAUSE 15.2.3 & 15.2.4, IRC:112-2011:
   - * 36ø (GRADE M35) FAVORABLE CONDITION
   - * 1.43x36ø (GRADE M35) UNFAVORABLE CONDITION

REFERENCE DRAWINGS

1.) GENERAL ARRANGEMENT DRAWING:-
AECOM-DELD15159-DD-DWG-FO-314+747-GAD-01 (SH6 OF 6)

2.) SUPERSTRUCTURE:-
AECOM-DELD15159-DD-DWG-FO-314+747-SUP-01 (SH16 OF 16)

3.) SUBSTRUCTURE AND FOUNDATION:- R1
AECOM-DELD15159-DD-DWG-FO-314+747-SUB-02 (SH1 OF 6)
AECOM-DELD15159-DD-DWG-FO-314+747-SUB-02 (SH2 OF 6)
AECOM-DELD15159-DD-DWG-FO-314+747-SUB-02 (SH4 OF 6)
AECOM-DELD15159-DD-DWG-FO-314+747-SUB-02 (SH5 OF 6)
AECOM-DELD15159-DD-DWG-FO-314+747-SUB-02 (SH6 OF 6)

4.) MISCELLANEOUS DWGS.
AECOM-DELD15159-DD-DWG-MISC.-01

LEGEND:-

- BEARING IN PLAN
- POT-CUM-PTFE BEARING IN ELEVATION
- JACK LOCATION IN PLAN
- JACK LOCATION IN ELEVATION
- BRG – BEARING
- EJ – EXPANSION JOINT
- FRL – FINISHED ROAD LEVEL
- FDN – FOUNDATION
- C/W – CARRIAGEWAY
- GL – GROUND LEVEL

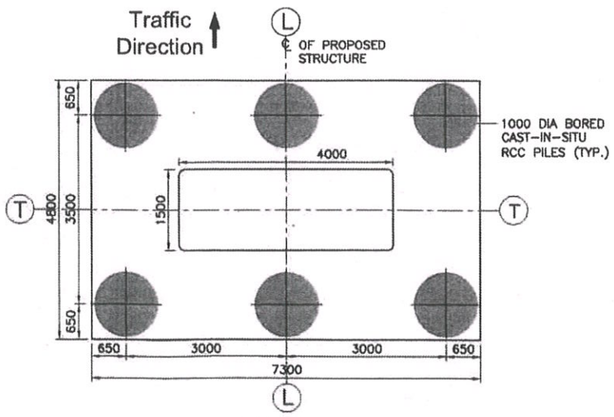

SECTION A-A
PLAN OF PIER, PILE CAP & PILES-P1 TO P4
(SHOWING DIMENSIONS)
(SCALE 1:75)

Resident Engineer
STUP Consultants Pvt. Ltd.
Nagaon, Assam

FOR APPROVAL

Rev.	Date	Description on Revisions
R1	29-08-2018	REVISED AS MARKED 'R1'.
R0	24-01-2018	FIRST SUBMISSION

Revisions

CLIENT:- NATIONAL HIGHWAYS & INFRASTRUCTURE DEVELOPMENT CORPORATION LTD

AUTHORITY'S ENGINEER: STUP Consultants P. Ltd & Ayoleeza Consultants P. Ltd.
AUTHORISED SIGNATORY | DATE

PROOF CHECK CONSULTANT:- CETEST
AUTHORISED SIGNATORY | DATE

SAEFTY CONSULTANT:- Chaitanya Projects Consultancy Pvt. Ltd
AUTHORISED SIGNATORY | DATE

PROJECT: FOUR LANING OF NH-37 FROM RANGAGARA TO KALIABOR TINIALI (CH: 297.000 KM TO CH: 315.315 KM) IN NAGAON DISTRICT IN THE STATE OF ASSAM UNDER SARDP-NE. PHASE A ON EPC MODE

EPC CONTRACTOR:- SIMPLEX INFRASTRUCTURES LIMITED, 27, SHAKESPEARE SARANI, KOLKATA-17, INDIA

CONSULTANT:- AECOM India Private Limited, 9th Floor, Infinity Tower C DLF Cyber City, DLF Phase II, Gurgaon-122002, Haryana, India
DRAWN | DESIGN | CHECKED BY | APPROVED BY

SCALE:- AS SHOWN

TITLE:- DIMENSION & REINFORCEMENT DETAILS OF PIER & FOUNDATION FOR P1 TO P4 & P11 TO P14 FOR FLYOVER AT CH. 314+992 (SCH-B CH. 314+747)

DRAWING NO.:- AECOM-DELD15159-DD-DWG-FO-314+747-SUB-02 (SH 3 OF 6) | REV. R1

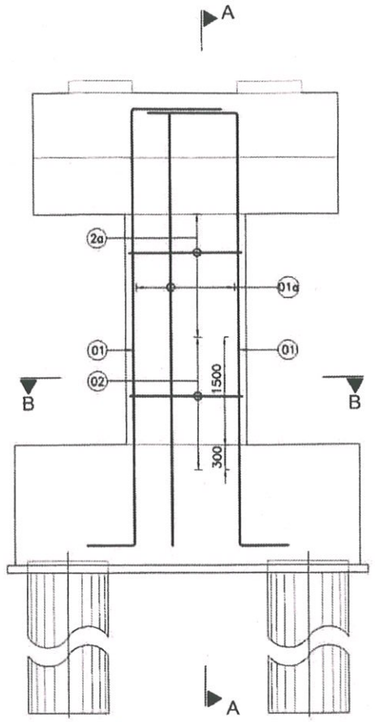

REINFORCEMENT DETAILS OF PIER
(SCALE 1:50)

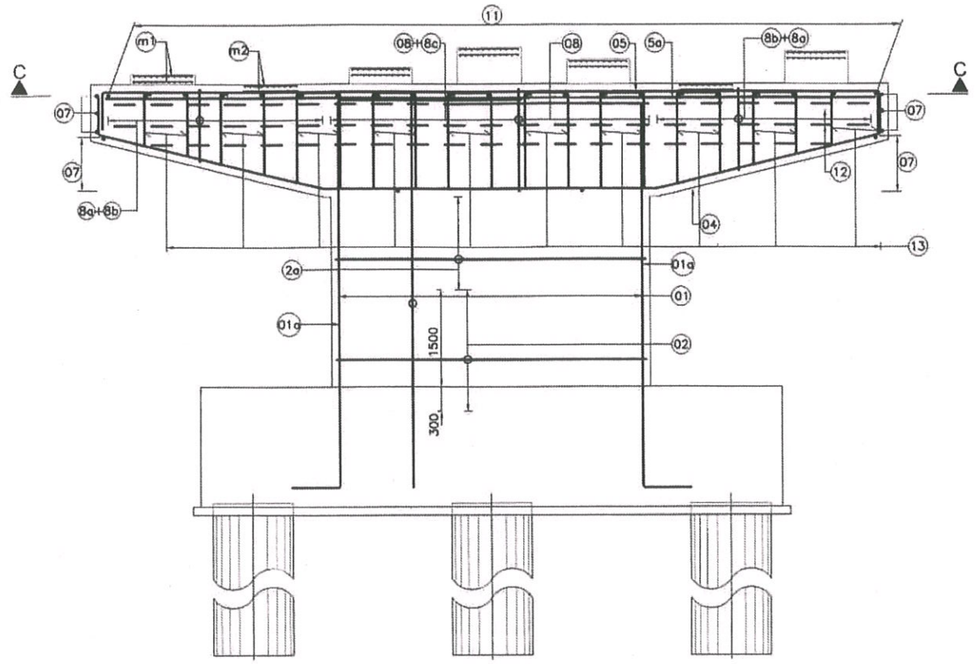

SECTION A-A
(SCALE 1:50)

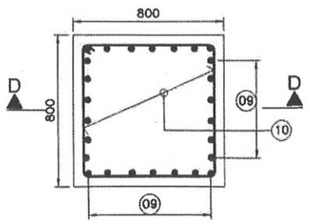

PLAN
(SHOWING REINF. IN FREE BRG. PEDESTAL)
(SCALE 1:20)

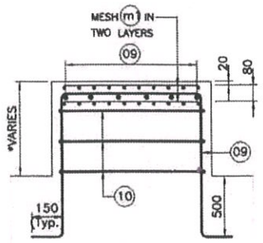

SECTION D-D
(*MINIMUM=250–HT. OF BRG.)
(SCALE 1:20)

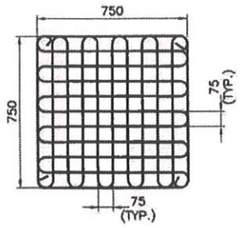

8 ϕ MESH (m1) FOR PEDESTAL
(UNDER BEARING LOCATION TWO LAYERS ONE AT 20MM & ANOTHER AT 80MM FROM TOP)
(SCALE: 1:20)

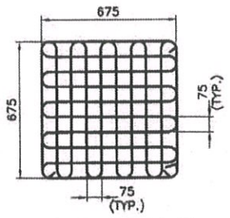

8 ϕ MESH (m2)
(UNDER JACK LOCATION TWO LAYERS ONE AT 20MM & ANOTHER AT 80MM FROM TOP)
(SCALE 1:20)

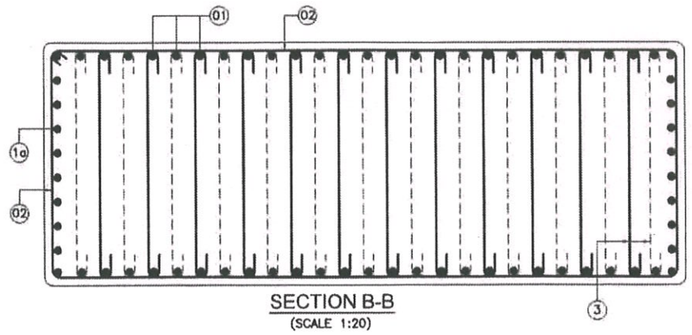

SECTION B-B
(SCALE 1:20)

Resident Engineer
STUP Consultants Pvt. Ltd.
Nagaon, Assam

FOR APPROVAL

Rev.	Date	Description on Revisions
R0	24-01-2018	FIRST SUBMISSION

Revisions

CLIENT:- NATIONAL HIGHWAYS & INFRASTRUCTURE DEVELOPMENT CORPORATION LTD

AUTHORITY'S ENGINEER: STUP Consultants P. Ltd & Ayoleeza Consultants P. Ltd. — AUTHORISED SIGNATORY — DATE

PROOF CHECK CONSULTANT:- ESTEST — AUTHORISED SIGNATORY — DATE

SAEFTY CONSULTANT:- Chaitanya Projects Consultancy Pvt. Ltd — AUTHORISED SIGNATORY — DATE

PROJECT: FOUR LANING OF NH-37 FROM RANGAGARA TO KALIABOR TINIALI (CH: 297.000 KM TO CH: 315.315 KM) IN NAGAON DISTRICT IN THE STATE OF ASSAM UNDER SARDP-NE. PHASE A ON EPC MODE

EPC CONTRACTOR:- SIMPLEX INFRASTRUCTURES LIMITED, 27, SHAKESPEARE SARANI, KOLKATA-17, INDIA

CONSULTANT:- AECOM India Private Limited, Gurgaon — 9th Floor, Infinity Tower C, DLF Cyber City, DLF Phase II, Gurgaon-122002, Haryana, India — DRAWN: Manish Hemani — DESIGN: K.P. Singh — CHECKED BY: Sandeep — APPROVED BY: S. Rastogi

SCALE:- AS SHOWN

TITLE:- DIMENSION & REINFORCEMENT DETAILS OF PIER & FOUNDATION FOR P1 TO P4 & P11 TO P14 FOR FLYOVER AT CH. 314+992 (SCH-B CH. 314+747)

DRAWING NO.:- AECOM-DELD15158-DD-DWG-FO-314+747-SUB-02 (SH 4 OF 6) — REV. R0

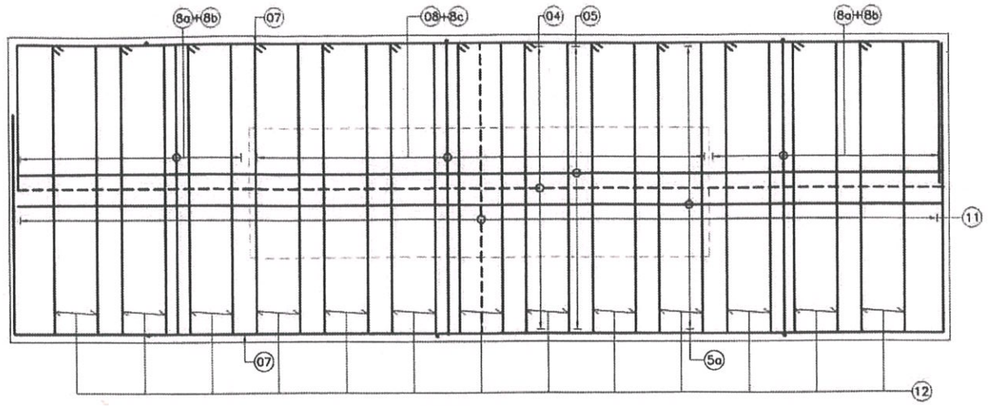

SECTION C-C
(SCALE 1:50)

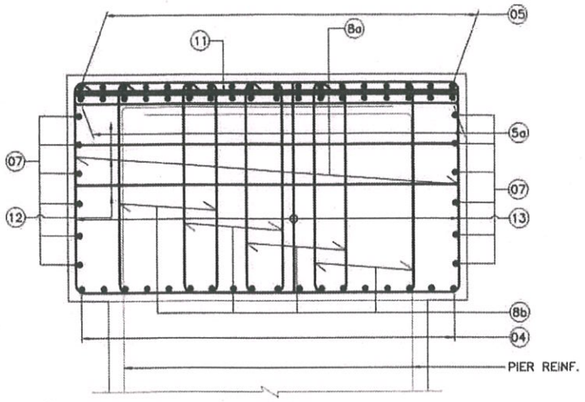

SECTION E-E
(SCALE 1:25)

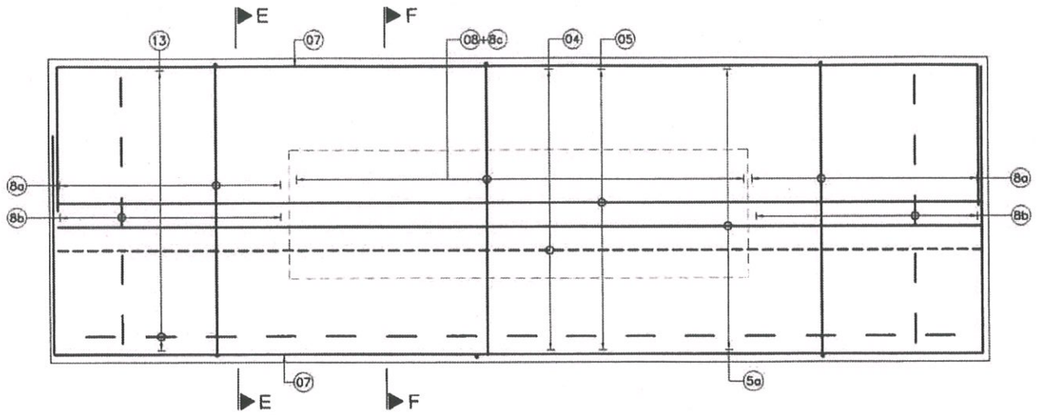

VERTICAL REINFORCEMENT
DETAILS IN PIER CAP PLAN
(SCALE 1:50)

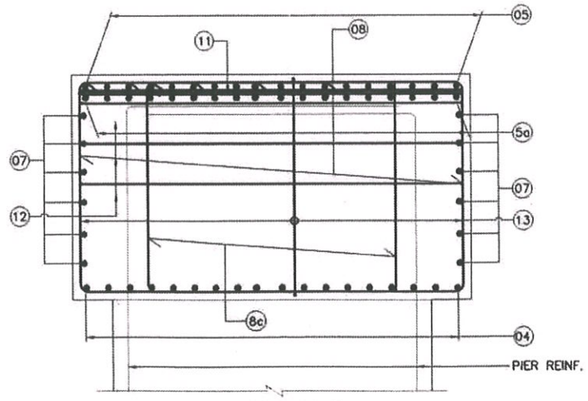

SECTION F-F
(SCALE 1:25)

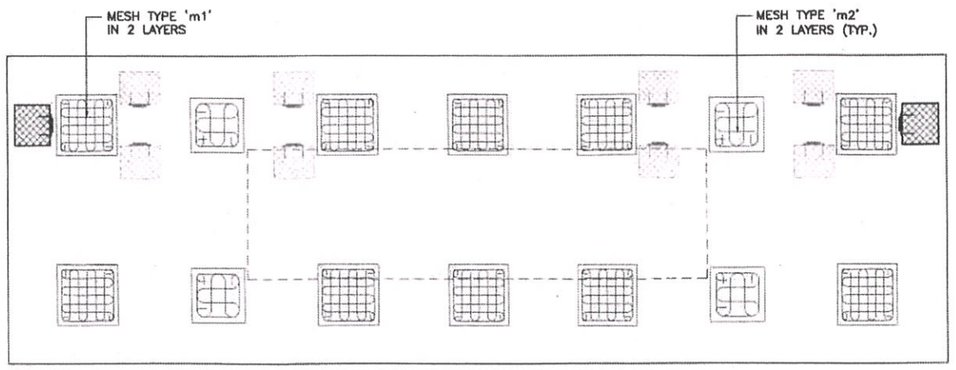

SEISMIC STOPPER & MESH REINFORCEMENT IN PIER CAP
(SCALE 1:50)

BAR SHAPE SCHEDULE

BAR MRKD.	DESCRIPTION	BAR SHAPE	REMARKS	
01	20ϕ–34x2 Nos.	500 500	BOTH FACE	PIER SHAFT
1a	16ϕ–10Nos.x2	500 500	BOTH FACE (ALONG TRAFFIC)	
02	20ϕ@100 c/c			
2a	16ϕ@100 c/c			
03	10ϕ@100 c/c VERTICALLY		STAGGERED LINKS, ALT. LONG. BARS	
04	16ϕ–25Nos.	400 400		PIER CAP
05	25ϕ–25Nos.	400 400		
5a	25ϕ–25Nos.			
06	NOT IN USE			
07	12ϕ– 2x6 Nos.	250 250		
08	2L–16ϕ@110c/c		STIRRUPS	
8a	2L–16ϕ@110c/c		STIRRUPS	
8b	16L–12ϕ@110c/c		STIRRUPS	
8c	2L–12ϕ@110c/c		STIRRUPS	
11	25ϕ@180 c/c			
12	4L–12ϕ–11Nos. IN TRASVERSE DIRECTION		IN 3 LAYER ALONG DEPTH @ 250 c/c, FIRST LAYER AT 165 FROM TOP	
13	2L–12ϕ 15 NOS. IN TRANSVERSE DIRECTION		250 c/c IN TRAFFIC DIRECTION	
09	12ϕ@150 c/c	150 150		PEDESTAL
10	12ϕ@150 c/c		STIRRUPS	

IMPORTANT NOTE:
REINFORCEMENT DETAILS TO BE REFERRED ONLY FROM TABLE

Resident Engineer
STUP Consultants Pvt. Ltd.,
Nagaon, Assam

LEGEND:-
– – – – ON BOTTOM FACE
——— ON TOP FACE

FOR APPROVAL

Rev.	Date	Description on Revisions
R0	24-01-2018	FIRST SUBMISSION

Revisions

CLIENT:- NATIONAL HIGHWAYS & INFRASTRUCTURE DEVELOPMENT CORPORATION LTD

AUTHORITY'S ENGINEER: STUP Consultants P. Ltd & Ayoleeza Consultants P. Ltd.
AUTHORISED SIGNATORY | DATE

PROOF CHECK CONSULTANT:- CETPA INFRA TECH PVT. LTD.
AUTHORISED SIGNATORY | DATE

SAEFTY CONSULTANT:- Chaitanya Projects Consultancy Pvt. Ltd
AUTHORISED SIGNATORY | DATE

PROJECT: FOUR LANING OF NH-37 FROM RANGAGARA TO KALIABOR TINIALI (CH: 297.000 KM TO CH: 315.315 KM) IN NAGAON DISTRICT IN THE STATE OF ASSAM UNDER SARDP-NE, PHASE A ON EPC MODE

EPC CONTRACTOR:- SIMPLEX INFRASTRUCTURES LIMITED, 27, SHAKESPEARE SARANI, KOLKATA-17, INDIA

CONSULTANT: AECOM India Private Limited, Gurugram
9th Floor, Infinity Tower-C, DLF City Phase-II, Gurugram-122002, Haryana, India
DRAWN | DESIGN | CHECKED BY | APPROVED BY

SCALE:- AS SHOWN

TITLE:- DIMENSION & REINFORCEMENT DETAILS OF PIER & FOUNDATION FOR P1 TO P4 & P11 TO P14 FOR FLYOVER AT CH. 314+992 (SCH-B CH. 314+747)

DRAWING NO.:- AECOM-DELD15159-DD-DWG-FO-314+747-SUB-02 (SH 5 OF 6) | REV. R0

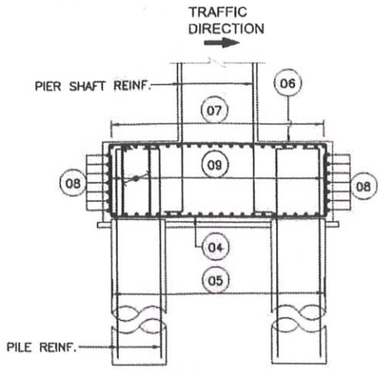

SECTION A-A
(SCALE 1:75)

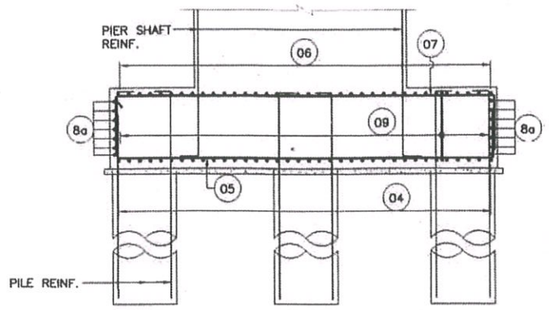

SECTION B-B
(SCALE 1:75)

BAR SHAPE SCHEDULE

BAR MRKD.	DESCRIPTION	BAR SHAPE	
01	32ϕ–10 Nos.	350	PILE
1a	32ϕ–10 Nos.	350	PILE
02	16ϕ@120c/c		PILE
2a	12ϕ@120c/c		PILE
03	NOT IN USE		
04	25ϕ@160c/c	1000 1000	PILE CAP
05	25ϕ@120c/c	1000 1000	PILE CAP
06	12ϕ@160c/c	1000 1000	PILE CAP
07	12ϕ@120c/c	1000 1000	PILE CAP
08	12ϕ@200c/c	300 300	PILE CAP
8a	12ϕ@200c/c	300 300	PILE CAP
09	6L–12ϕ (PER M WIDTH) IN TRAFFIC DIRECTION @140c/c IN TRANSV. DIRECTION		PILE CAP

IMPORTANT NOTE:
REINFORCEMENT DETAILS TO BE REFERRED ONLY FROM TABLE

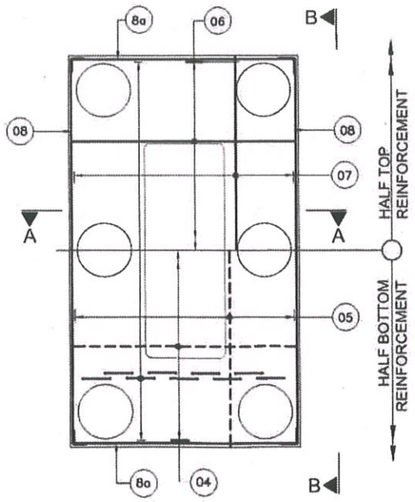

PLAN OF PILE CAP
(SCALE 1:75)

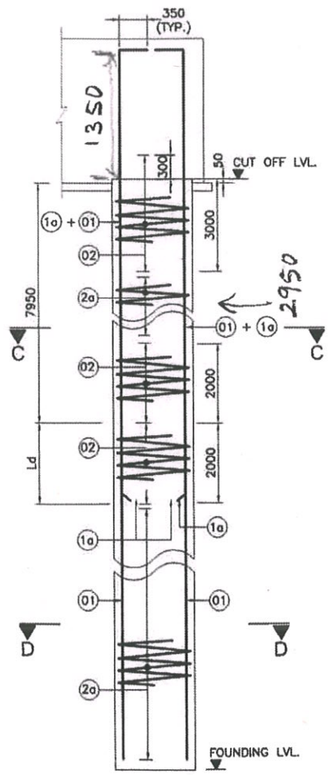

REINF. DETAILS OF PILE SHAFT
(SCALE 1:50)

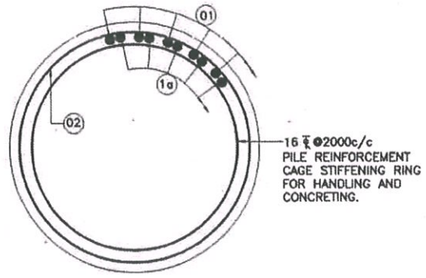

SECTION C-C
(SCALE 1:20)

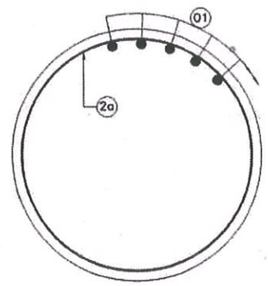

SECTION D-D
(SCALE 1:20)

LEGEND:-

BAR ON TOP FACE
BAR ON BOTTOM FACE

$Ld = 1.43 \times 40 \times 20 \times 2^{0.5} = 1700MM$

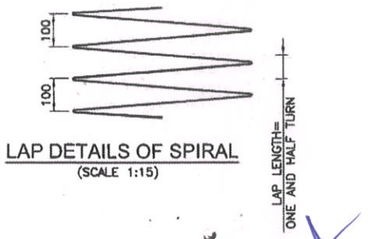

LAP DETAILS OF SPIRAL
(SCALE 1:15)

LOCATION	LENGTH OF PILE (m)	DESIGN VERTICAL LOAD (t)		VERTICAL LOAD CARRYING CAPACITY (t) (AS PER GEOTECH REPORT)		LATERAL DEFLECTION OF PILE AT PILE HEAD LEVEL (mm)	PERMISSIBLE LATERAL DEFLECTION OF PILE AT SCOUR LEVEL (mm)
		NORMAL	SEISMIC	NORMAL	SEISMIC		
P1 TO P4 P11 TO P14	30	231.38	340.89	310	387.5	0.706	10.0

Resident Engineer
STUP Consultants Pvt. Ltd.
...on, Assam

FOR APPROVAL

Rev.	Date	Description on Revisions
R1	29-08-2018	REVISED AS MARKED 'R1'
R0	24-01-2018	FIRST SUBMISSION

Revisions

CLIENT:- NATIONAL HIGHWAYS & INFRASTRUCTURE DEVELOPMENT CORPORATION LTD

AUTHORITY'S ENGINEER: STUP Consultants P. Ltd & Ayoleeza Consultants P. Ltd.
AUTHORISED SIGNATORY | DATE

PROOF CHECK CONSULTANT: CONSTECH CONSULTANTS PVT. LTD. KOLKATA
AUTHORISED SIGNATORY | DATE 19/7/18

SAFETY CONSULTANT:- Chaitanya Projects Consultancy Pvt. Ltd
AUTHORISED SIGNATORY | DATE

PROJECT: FOUR LANING OF NH-37 FROM RANGAGARA TO KALJABOR TINIALI (CH: 297.000 KM TO CH: 315.315 KM) IN NAGAON DISTRICT IN THE STATE OF ASSAM UNDER SARDP-NE. PHASE A ON EPC MODE

EPC CONTRACTOR:- SIMPLEX INFRASTRUCTURES LIMITED, 27, SHAKESPEARE SARANI, KOLKATA-17, INDIA

CONSULTANT: AECOM India Private Limited, 9th Floor, Infinity Tower C, DLF Cyber City, DLF Phase II, Gurugram-122002, Haryana, India

DRAWN	DESIGN	CHECKED BY	APPROVED BY
Manish Verma	A. Pandey	Sujit	B. Rastogi

SCALE:- AS SHOWN

TITLE:- DIMENSION & REINFORCEMENT DETAILS OF PIER & FOUNDATION FOR P1 TO P4 & P11 TO P14 FOR FLYOVER AT CH. 314+992 (SCH-B CH. 314+747)

DRAWING NO.:- AECOM-DELD18159-DD-DWG-FO-314+747-SUB-02 (SH 6 OF 6) REV. R1

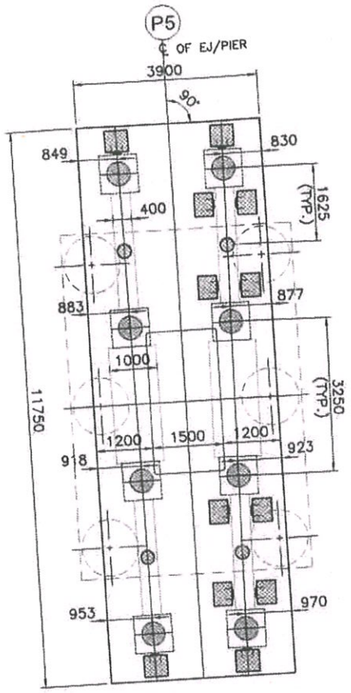

TOP PLAN OF PIER CAP-P5
(SCALE 1:75)

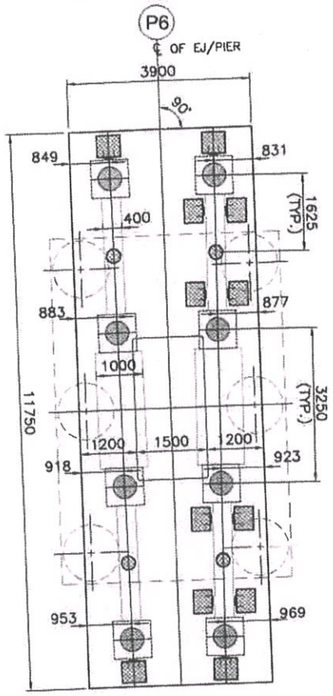

TOP PLAN OF PIER CAP-P6
(SCALE 1:75)

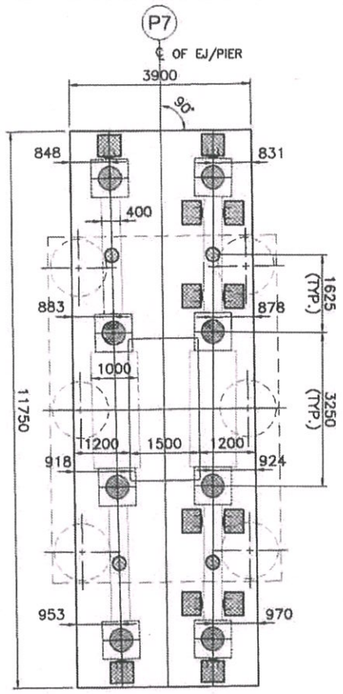

TOP PLAN OF PIER CAP-P7
(SCALE 1:75)

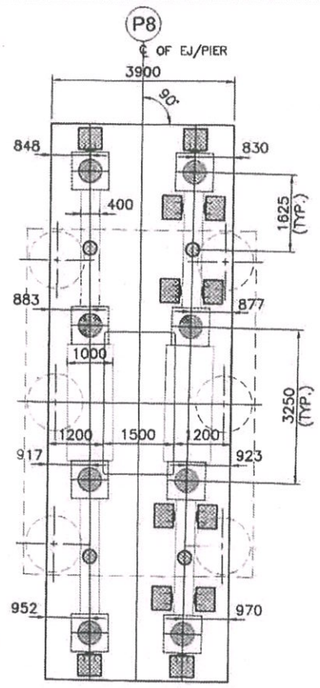

TOP PLAN OF PIER CAP-P8
(SCALE 1:75)

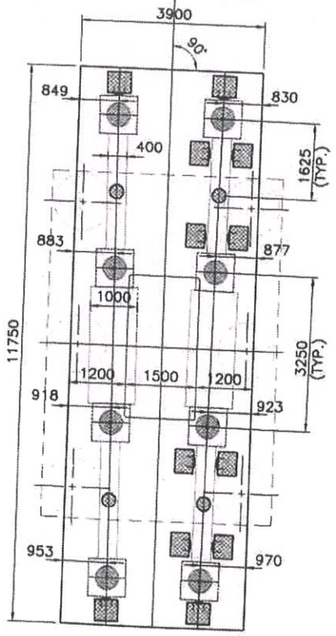

TOP PLAN OF PIER CAP-P9
(SCALE 1:75)

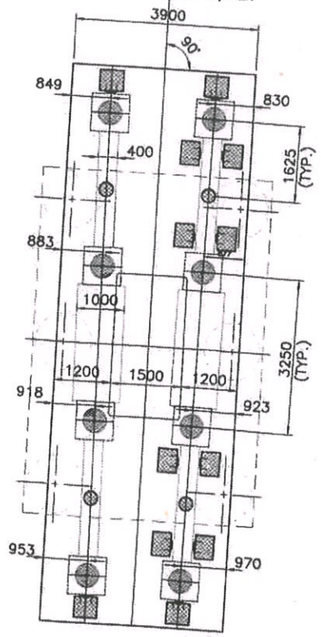

TOP PLAN OF PIER CAP-P10
(SCALE 1:75)

LEVEL DETAILS

LEVELS	PIER					
	P5	P6	P7	P8	P9	P10
FRL	76.530	76.843	77.013	77.041	76.928	76.672
PIER CAP TOP LVL.	73.614	73.927	74.097	74.125	74.012	73.756
GL (FRL OF RME)	68.587	68.665	68.728	68.753	68.778	68.803
PILE CAP TOP LVL.	67.837	67.915	67.978	68.003	68.028	68.053
FDN. LEVEL	36.337	36.415	36.478	36.503	36.528	36.553
ALL LEVELS SHALL BE VERIFIED AT SITE BEFORE EXECUTION OF WORK.						

Resident Engineer
STUP Consultants Pvt. Ltd.
Nagaon, Assam

Rev.	Date	Description on Revisions
R1	29-08-2018	AS PER REVISED PLAN & PROFILE REVISION R2
R0	07-02-2018	INITIAL SUBMISSION

Revisions

CLIENT:- NATIONAL HIGHWAYS & INFRASTRUCTURE DEVELOPMENT CORPORATION LTD

AUTHORITY'S ENGINEER: STUP Consultants P. Ltd & Ayoleeza Consultants P. Ltd. — AUTHORISED SIGNATORY | DATE

PROOF CHECK CONSULTANT: CETEM — AUTHORISED SIGNATORY | DATE

SAEFTY CONSULTANT:- Chaitanya Projects Consultancy Pvt. Ltd — AUTHORISED SIGNATORY | DATE

PROJECT: FOUR LANING OF NH-37 FROM RANGAGARA TO KALIABOR TINIALI (CH: 297.000 KM TO CH: 315.315 KM) IN NAGAON DISTRICT IN THE STATE OF ASSAM UNDER SARDP-NE, PHASE A ON EPC MODE

EPC CONTRACTOR:- SIMPLEX INFRASTRUCTURES LIMITED, 27, SHAKESPEARE SARANI, KOLKATA-17, INDIA

CONSULTANTS:- AECOM India Private Limited, 9th Floor, Infinity Tower C, DLF Phase II, Gurugram-122002, Haryana, India

DRAWN	DESIGN	CHECKED BY	APPROVED BY
NAMRATA VERMA			S. Rastogi

SCALE:- AS SHOWN

TITLE:- DIMENSION & REINFORCEMENT DETAILS OF PIER & FOUNDATION FOR P5 TO P10 FOR FLYOVER AT CH. 314+992 (SCH-B CH. 314+747)

DRAWING NO.:- AECOM-DELD15159-DD-DWG-FO-314+747-SUB-03 (SH1 OF 5) — REV. R1