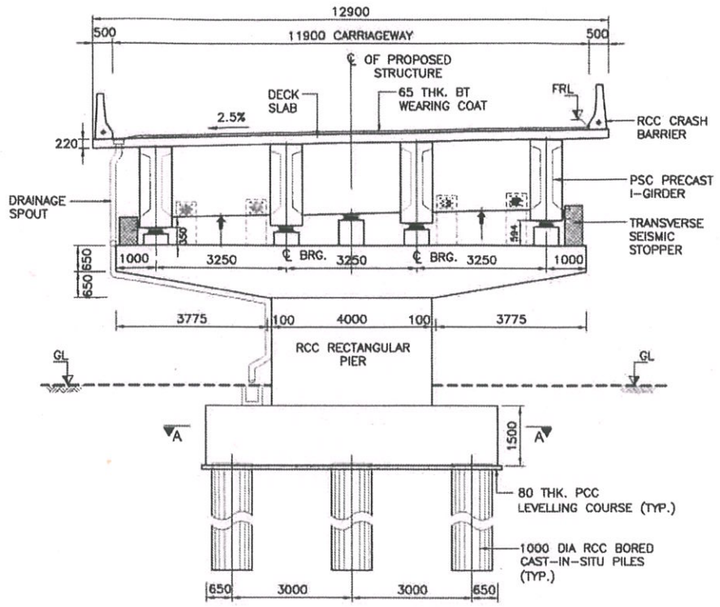

VIEW B-B
(SCALE : 1:100)

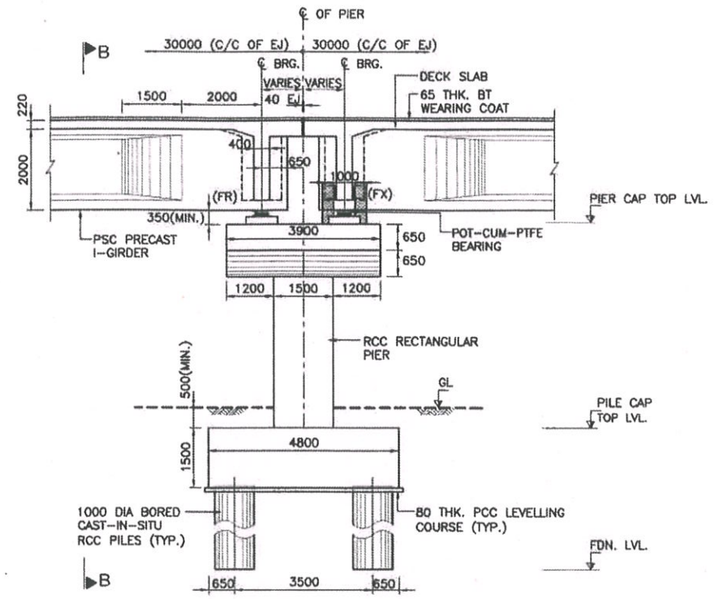

LONGITUDINAL ELEVATION OF PIER & FOOTING (AT PEIR P5 TO P10)
(SCALE 1:100)

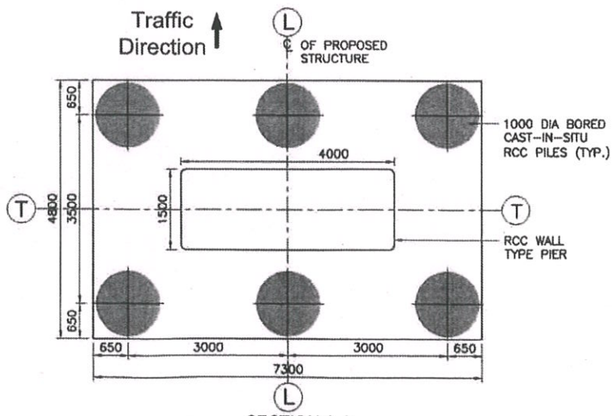

SECTION A-A
PLAN OF ABUTMENT, PILE CAP & PILES-P5 TO P10
(SHOWING DIMENSIONS)
(SCALE 1:75)

NOTES:-

1. ALL DIMENSIONS ARE IN MILLIMETERS, LEVELS ARE IN METERS UNLESS OTHERWISE MENTIONED.
2. NO DIMENSION SHALL BE MEASURED FROM THE DRAWINGS. ONLY WRITTEN DIMENSIONS SHALL BE FOLLOWED.
3. THE REINFORCEMENT SHALL BE HYSD BARS OF GRADE DESIGNATION Fe 500D CONFORMING TO IS 1786-2008.
4. CONCRETE SHALL BE DESIGN MIX WITH A MINIMUM 28 DAYS CHARACTERISTIC CUBE STRENGTH FOR DIFFERENT ELEMENTS AS FOLLOWS:
   - a.RCC PIER & PIER CAP — M35
   - b.RCC PILE & PILE CAP — M35
   - c.RCC CRASH BARRIER — M40
   - d.PCC LEVELING COURSE — M15
   - e.RCC PEDESTALS — M40
   - f.RCC SEISMIC STOPPER — M35
5. CLEAR COVER TO OUTER STEEL SHALL BE AS FOLLOWS:-
   - a.RCC PIER STEM — 40MM
   - b.RCC PIER CAP — 40MM
   - c.RCC SEISMIC STOPPERS — 40MM
   - d.RCC PILE & PILE CAP — 75MM
   - e.RCC CRASH BARRIER — 40MM
6. LAPPING OF REINFORCEMENT SHALL BE AVOIDED AS FAR AS POSSIBLE. IN CASE LAPPING OF BARS BECOME UNAVOIDABLE, NOT MORE THAN 50% OF BARS SHALL BE LAPPED AT A SECTION. LAP LENGTH SHALL BE PROVIDED AS PER CLAUSE 15.2.5 IRC:112-2011:
   - * 1.5x36ø (GRADE M35) FAVOURABLE CONDITION
   - * 1.5x1.43x36ø (GRADE M35) UNFAVOURABLE CONDITION
7. ANCHORAGE LENGTH SHALL BE AS PER CLAUSE 15.2.3 & 15.2.4, IRC:112-2011:
   - * 36ø (GRADE M35) FAVORABLE CONDITION
   - * 1.43x36ø (GRADE M35) UNFAVORABLE CONDITION

REFERENCE DRAWINGS

1.) GENERAL ARRANGEMENT DRAWING:-
AECOM-DELD15159-DD-DWG-FO-314+747-GAD-01 (SH6 OF 6)

2.) SUPERSTRUCTURE:-
AECOM-DELD15159-DD-DWG-FO-314+747-SUP-01 (SH16 OF 16)

3.) SUBSTRUCTURE:-
AECOM-DELD15159-DD-DWG-FO-314+747-SUB-03 (SH1 OF 5)
AECOM-DELD15159-DD-DWG-FO-314+747-SUB-03 (SH3 OF 5)
AECOM-DELD15159-DD-DWG-FO-314+747-SUB-03 (SH4 OF 5)
AECOM-DELD15159-DD-DWG-FO-314+747-SUB-03 (SH5 OF 5)

4.) MISCELLANEOUS DWGS.
AECOM-DELD15159-DD-DWG-MISC.-01

LEGEND:-

- BEARING IN PLAN
- POT-CUM-PTFE BEARING IN ELEVATION
- JACK LOCATION IN PLAN
- JACK LOCATION IN ELEVATION
- BRG – BEARING
- EJ – EXPANSION JOINT
- LVL. – LEVEL
- FRL – FINISHED ROAD LEVEL
- FDN – FOUNDATION
- C/W – CARRIAGEWAY
- GL – GROUND LEVEL

Resident Engineer
STUP Consultants P. Ltd.
Nagaon, Assam

Rev.	Date	Description on Revisions
R0	07-02-2018	INITIAL SUBMISSION

Revisions

CLIENT:- NATIONAL HIGHWAYS & INFRASTRUCTURE DEVELOPMENT CORPORATION LTD

AUTHORITY'S ENGINEER: STUP Consultants P. Ltd & Ayoleeza Consultants P. Ltd.
AUTHORISED SIGNATORY | DATE

PROOF CHECK CONSULTANT:
AUTHORISED SIGNATORY | DATE

SAEFTY CONSULTANT:- Chaitanya Projects Consultancy Pvt. Ltd
AUTHORISED SIGNATORY | DATE

PROJECT: FOUR LANING OF NH-37 FROM RANGAGARA TO KALIABOR TINIALI (CH: 297.000 KM TO CH: 315.315 KM) IN NAGAON DISTRICT IN THE STATE OF ASSAM UNDER SARDP-NE, PHASE A ON EPC MODE

EPC CONTRACTOR:- SIMPLEX INFRASTRUCTURES LIMITED, 27, SHAKESPEARE SARANI, KOLKATA-17, INDIA

CONSULTANTS:- AECOM, 9th Floor, Infinity Tower C DLF Cyber City, DLF Phase II, Gurgaon-122002, Haryana, India
DRAWN | DESIGN | CHECKED BY | APPROVED BY

SCALE:- AS SHOWN

TITLE:- DIMENSION & REINFORCEMENT DETAILS OF PIER & FOUNDATION FOR P5 TO P10 FOR FLYOVER AT CH. 314+992 (SCH-B CH. 314+747)

DRAWING NO.:- AECOM-DELD15159-DD-DWG-FO-314+747-SUB-03 (SH 2 OF 5) | REV. R0

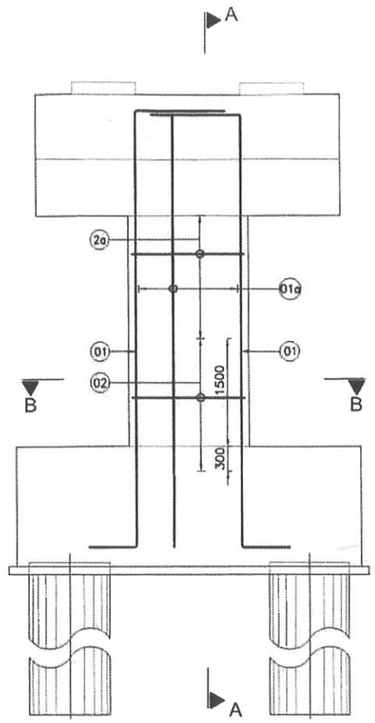

REINFORCEMENT DETAILS OF PIER
(SCALE 1:50)

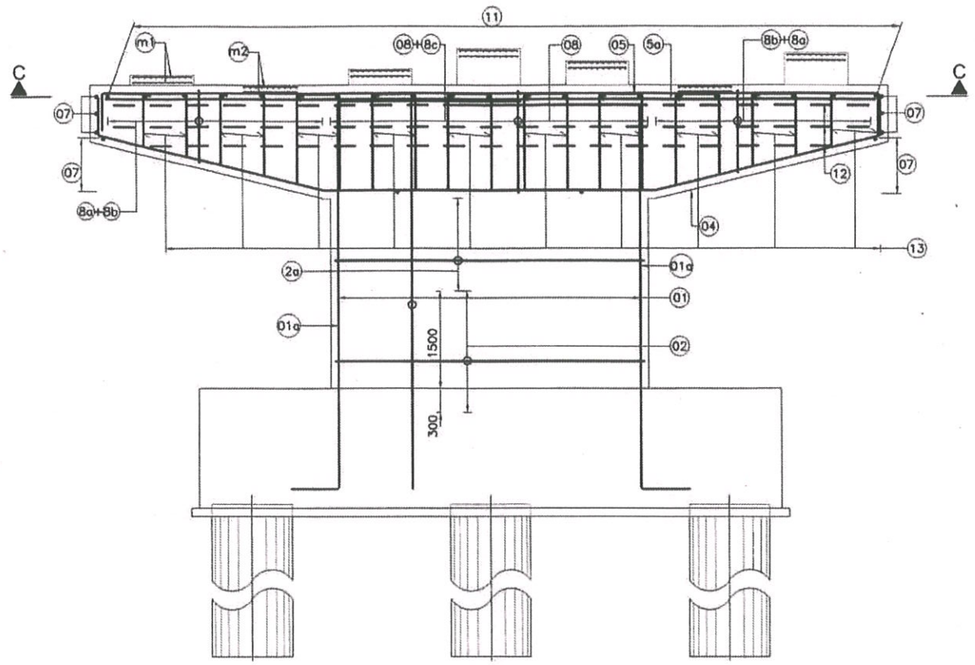

SECTION A-A
(SCALE 1:50)

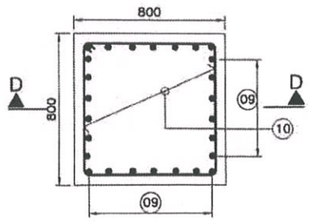

PLAN
(SHOWING REINF. IN FREE BRG. PEDESTAL)
(SCALE 1:20)

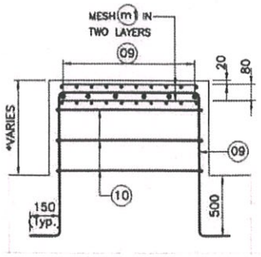

SECTION D-D
(*MINIMUM=250–HT. OF BRG.)
(SCALE 1:20)

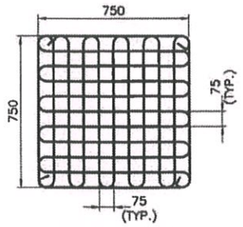

8 ϕ MESH (m1) FOR PEDESTAL
(UNDER BEARING LOCATION TWO LAYERS ONE AT 20MM & ANOTHER AT 80MM FROM TOP)
(SCALE: 1:20)

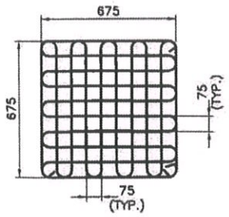

8 ϕ MESH (m2)
(UNDER JACK LOCATION TWO LAYERS ONE AT 20MM & ANOTHER AT 80MM FROM TOP)
(SCALE 1:20)

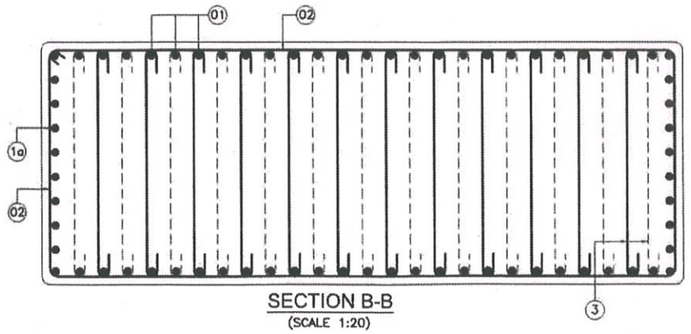

SECTION B-B
(SCALE 1:20)

Resident Engineer
STUP Consultants Pvt. Ltd.
Nagaon, Assam

Rev.	Date	Description on Revisions
R0	07-02-2018	FIRST SUBMISSION

Revisions

CLIENT:- NATIONAL HIGHWAYS & INFRASTRUCTURE DEVELOPMENT CORPORATION LTD

AUTHORITY'S ENGINEER: STUP Consultants P. Ltd & Ayoleeza Consultants P. Ltd. — AUTHORISED SIGNATORY — DATE

PROOF CHECK CONSULTANT: — AUTHORISED SIGNATORY — DATE

SAEFTY CONSULTANT:- Chaitanya Projects Consultancy Pvt. Ltd — AUTHORISED SIGNATORY — DATE

PROJECT: FOUR LANING OF NH-37 FROM RANGAGARA TO KALIABOR TINIALI (CH: 297.000 KM TO CH: 315.315 KM) IN NAGAON DISTRICT IN THE STATE OF ASSAM UNDER SARDP-NE, PHASE A ON EPC MODE

EPC CONTRACTOR:- SIMPLEX INFRASTRUCTURES LIMITED, 27, SHAKESPEARE SARANI, KOLKATA-17, INDIA

CONSULTANT:- AECOM India Private Limited — DRAWN — DESIGN — CHECKED BY — APPROVED BY

SCALE:- AS SHOWN

TITLE:- DIMENSION & REINFORCEMENT DETAILS OF PIER & FOUNDATION FOR P5 TO P10 FOR FLYOVER AT CH. 314+992 (SCH-B CH. 314+747)

DRAWING NO.:- AECOM-DELD15159-DD-DWG-FO-314+747-SUB-03 (SH 3 OF 5) — REV. R0

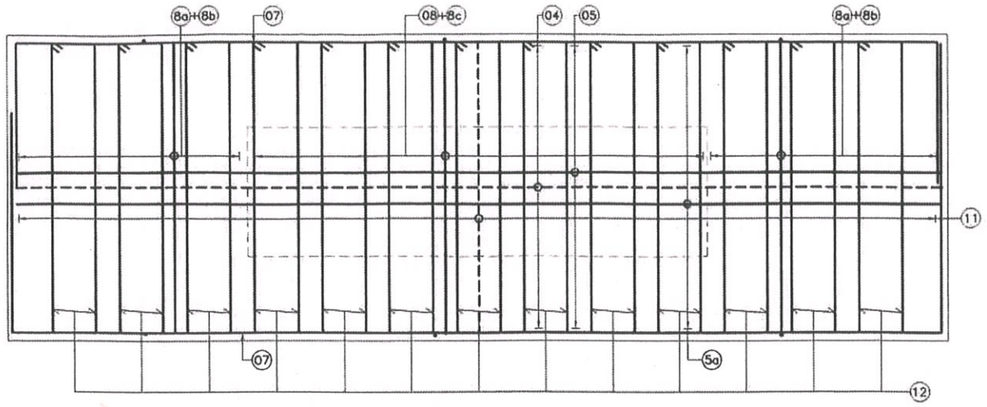

SECTION C-C
(SCALE 1:50)

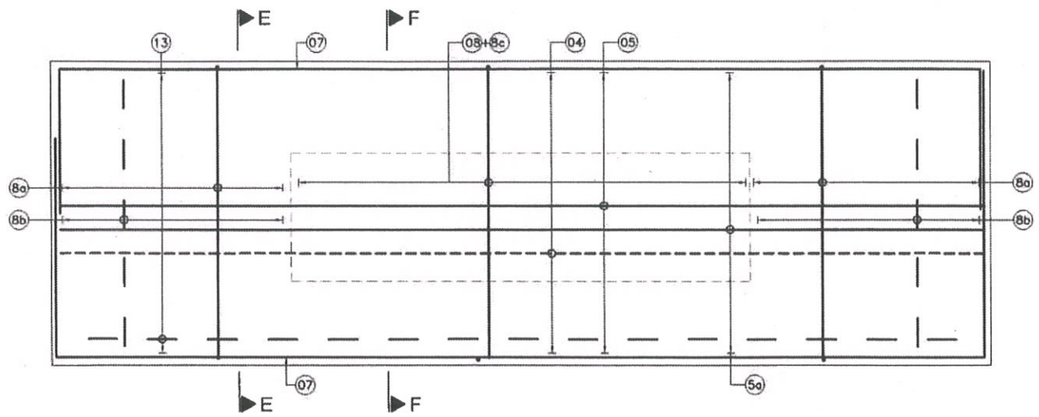

VERTICAL REINFORCEMENT
DETAILS IN PIER CAP PLAN
(SCALE 1:50)

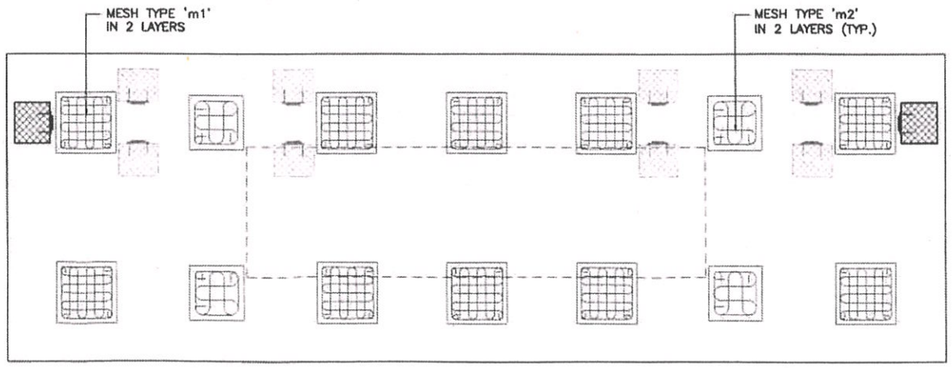

SIESMIC STOPPER & MESH REINFORCEMENT IN PIER CAP
(SCALE 1:50)

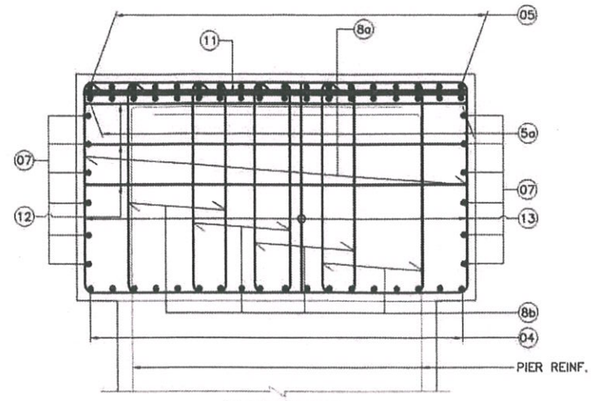

SECTION E-E
(SCALE 1:25)

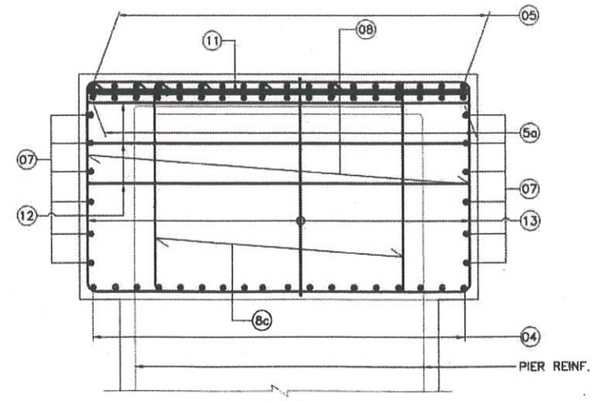

SECTION F-F
(SCALE 1:25)

BAR SHAPE SCHEDULE

BAR MRKD.	DESCRIPTION	BAR SHAPE	REMARKS	
01	20ϕ–34x2 Nos.	500 500	BOTH FACE	PIER SHAFT
1a	16ϕ–10Nos.x2	500 500	BOTH FACE (ALONG TRAFFIC)	PIER SHAFT
02	20ϕ@100 c/c			PIER SHAFT
2a	16ϕ@100 c/c			PIER SHAFT
03	10ϕ@100 c/c VERTICALLY		STAGGERED LINKS, ALT. LONG. BARS	PIER SHAFT
04	16ϕ–25Nos.	400 400		PIER CAP
05	25ϕ–25Nos.	400 400		PIER CAP
5a	25ϕ–25Nos.			PIER CAP
06	NOT IN USE			PIER CAP
07	12ϕ– 2x6 Nos.	250 250		PIER CAP
08	2L–16ϕ@120c/c		STIRRUPS	PIER CAP
8a	2L–16ϕ@120c/c		STIRRUPS	PIER CAP
8b	16L–12ϕ@120c/c		STIRRUPS	PIER CAP
8c	2L–12ϕ@120c/c		STIRRUPS	PIER CAP
11	25ϕ@180 c/c			PIER CAP
12	4L–12ø–11Nos. IN TRASVERSE DIRECTION		IN 3 LAYER ALONG DEPTH @ 250 c/c, FIRST LAYER AT 165 FROM TOP	PIER CAP
13	2L–12ø 15 NOS. IN TRANSVERSE DIRECTION		250 c/c IN TRAFFIC DIRECTION	PIER CAP
09	12ϕ@150 c/c	150 150		PEDESTAL
10	12ϕ@150 c/c		STIRRUPS	PEDESTAL

IMPORTANT NOTE:
REINFORCEMENT DETAILS TO BE REFERRED ONLY FROM TABLE

Resident Engineer
STUP Consultants Pvt. Ltd.
Lagaon, Assam

LEGEND:
- - - - ON BOTTOM FACE
——— ON TOP FACE

Rev.	Date	Description on Revisions
R0	07-02-2018	FIRST SUBMISSION

Revisions

CLIENT:- NATIONAL HIGHWAYS & INFRASTRUCTURE DEVELOPMENT CORPORATION LTD

AUTHORITY'S ENGINEER: STUP Consultants P. Ltd & Ayoleeza Consultants P. Ltd.
AUTHORISED SIGNATORY | DATE

PROOF CHECK CONSULTANT: CETES LTD. KOLKATA
AUTHORISED SIGNATORY | DATE

SAEFTY CONSULTANT:- Chaitanya Projects Consultancy Pvt. Ltd
AUTHORISED SIGNATORY | DATE

PROJECT: FOUR LANING OF NH-37 FROM RANGAGARA TO KALIABOR TINIALI (CH: 297.000 KM TO CH: 315.315 KM) IN NAGAON DISTRICT IN THE STATE OF ASSAM UNDER SARDP-NE. PHASE A ON EPC MODE

EPC CONTRACTOR:- SIMPLEX INFRASTRUCTURES LIMITED, 27, SHAKESPEARE SARANI, KOLKATA-17, INDIA

CONSULTANTS:- AECOM India Private Limited, Gurgaon
DRAWN | DESIGN | CHECKED BY | APPROVED BY: S. Rastogi

SCALE:- AS SHOWN

TITLE:- DIMENSION & REINFORCEMENT DETAILS OF PIER & FOUNDATION FOR P5 TO P10 FOR FLYOVER AT CH. 314+992 (SCH-B CH. 314+747)

DRAWING NO.:- AECOM-DELD15159-DD-DWG-FO-314+747-SUB-03 (SH 4 OF 5) | REV. R0

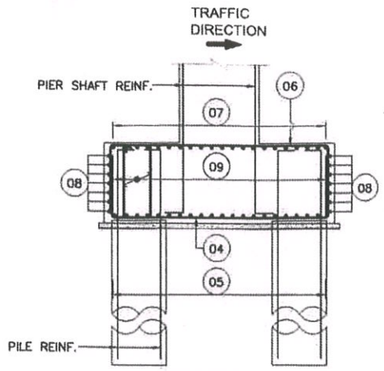

SECTION A-A
(SCALE 1:75)

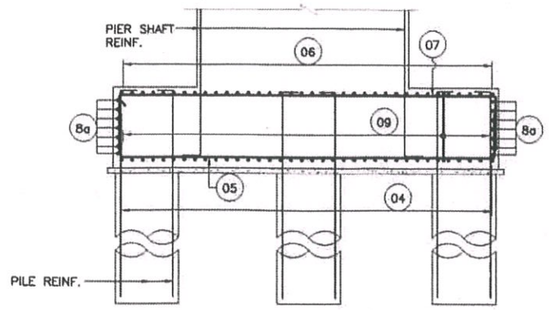

SECTION B-B
(SCALE 1:75)

BAR SHAPE SCHEDULE

BAR MRKD.	DESCRIPTION	BAR SHAPE	
01	32ϕ–11 Nos.	350	PILE
1a	32ϕ–11 Nos.	350	PILE
02	16ϕ@110c/c		PILE
2a	12ϕ@100c/c		PILE
03	NOT IN USE		
04	25ϕ@160c/c	1000	PILE CAP
05	25ϕ@110c/c	1000	PILE CAP
06	12ϕ@160c/c	1000	PILE CAP
07	12ϕ@110c/c	1000	PILE CAP
08	12ϕ@200c/c	300	PILE CAP
8a	12ϕ@200c/c	300	PILE CAP
09	6L–12ϕ (PER M WIDTH) IN TRAFFIC DIRECTION @140c/c IN TRANSV. DIRECTION		PILE CAP

IMPORTANT NOTE:
REINFORCEMENT DETAILS TO BE REFERRED ONLY FROM TABLE

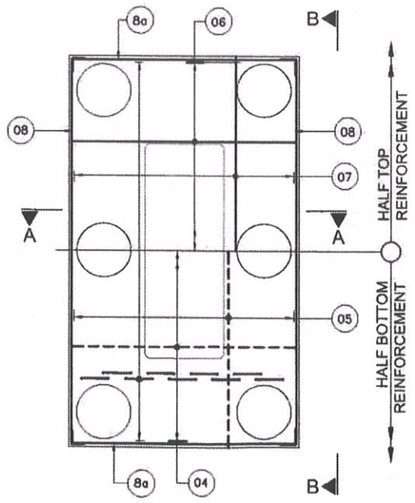

PLAN OF PILE CAP
(SCALE 1:75)

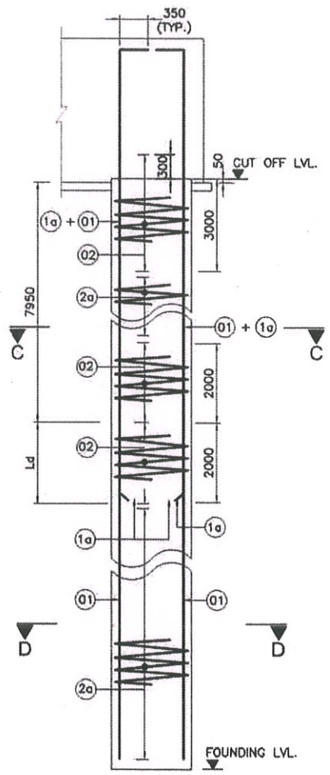

REINF. DETAILS OF PILE SHAFT
(SCALE 1:50)

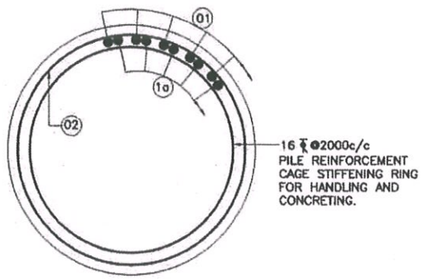

SECTION C-C
(SCALE 1:20)

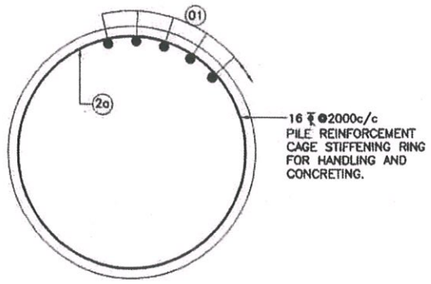

SECTION D-D
(SCALE 1:20)

LEGEND:-

——— BAR ON TOP FACE
— — — BAR ON BOTTOM FACE

Ld = 1.43 x 40 x 20 x $2^{0.5}$ = 1700MM

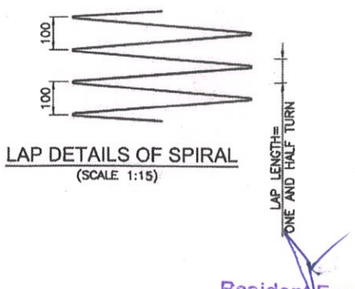

LAP DETAILS OF SPIRAL
(SCALE 1:15)

LOCATION	LENGTH OF PILE (m)	DESIGN VERTICAL LOAD (t)		VERTICAL LOAD CARRYING CAPACITY (t) (AS PER GEOTECH REPORT)		LATERAL DEFLECTION OF PILE AT PILE HEAD LEVEL (mm)	PERMISSIBLE LATERAL DEFLECTION OF PILE AT SCOUR LEVEL (mm)
		NORMAL	SEISMIC	NORMAL	SEISMIC		
P5 TO P10	30	232.70	355.98	310	387.5	0.706	10.0 R1

Resident Engineer
STUP Consultants Pvt. Ltd.
Nagaon, Assam

Rev.	Date	Description on Revisions
R1	29-08-2018	REVISED AS MARKED 'R1'
R0	07-02-2018	FIRST SUBMISSION

Revisions

CLIENT:- NATIONAL HIGHWAYS & INFRASTRUCTURE DEVELOPMENT CORPORATION LTD

AUTHORITY'S ENGINEER: STUP Consultants P. Ltd & Ayoleeza Consultants P. Ltd.
AUTHORISED SIGNATORY | DATE

PROOF CHECK CONSULTANT: CWEST
AUTHORISED SIGNATORY | DATE

SAEFTY CONSULTANT:- Chaitanya Projects Consultancy Pvt. Ltd
AUTHORISED SIGNATORY | DATE

PROJECT: FOUR LANING OF NH-37 FROM RANGAGARA TO KALIABOR TINIALI (CH: 297.000 KM TO CH: 315.315 KM) IN NAGAON DISTRICT IN THE STATE OF ASSAM UNDER SARDP-NE, PHASE A ON EPC MODE

EPC CONTRACTOR:- SIMPLEX INFRASTRUCTURES LIMITED
27, SHAKESPEARE SARANI, KOLKATA-17, INDIA

CONSULTANTS: AECOM India Private Limited, Gurgaon
DRAWN | DESIGN | CHECKED BY | APPROVED BY

SCALE:- AS SHOWN

TITLE:- DIMENSION & REINFORCEMENT DETAILS OF PIER & FOUNDATION FOR P5 TO P10 FOR FLYOVER AT CH. 314+992 (SCH-B CH. 314+747)

DRAWING NO.:- AECOM-DELD15159-DD-DWG-FO-314+747-SUB-03 (SH 5 OF 5) | REV. R1

Simplex letter no- 184
Date - 28.08.18
Stup letter no. 180
Date - 12/09/18
29.8.18

SE
Refer IOM :- IOC/NH-37/IOC/2018-19/19 dtd- 31.10.2018.
Please ~~refer~~ check the pile co-ordinate & report to TL.
01/11/2018

NATIONAL HIGHWAYS & INFRASTRUCTURE DEVELOPMENT CORPORATION LTD.

Four Laning of NH – 37 from Rangagara to Kaliabor Tiniali (Ch: 297.000 Km to Ch:315.315 Km of NH-37) in Nagaon District in the State of Assam under SARDP – NE, Phase A, on EPC Basis

GAD

FLYOVER

(AT DESIGN CH.314+992)

REVISED GAD & PILE COORDINATES DWG

CONTRACTOR:-

SIMPLEX INFRASTRUCTURES LIMITED

AUTHORITY'S ENGINEER:-

STUP Consultants P.Ltd
&
Ayoleeza Consultants P.Ltd

CONSULTANTS:-

AECOM
AECOM India Private Limited

AUGUST 2018

GENERAL ARRANGEMENT DRAWING FOR FLYOVER AT CH. 314+992

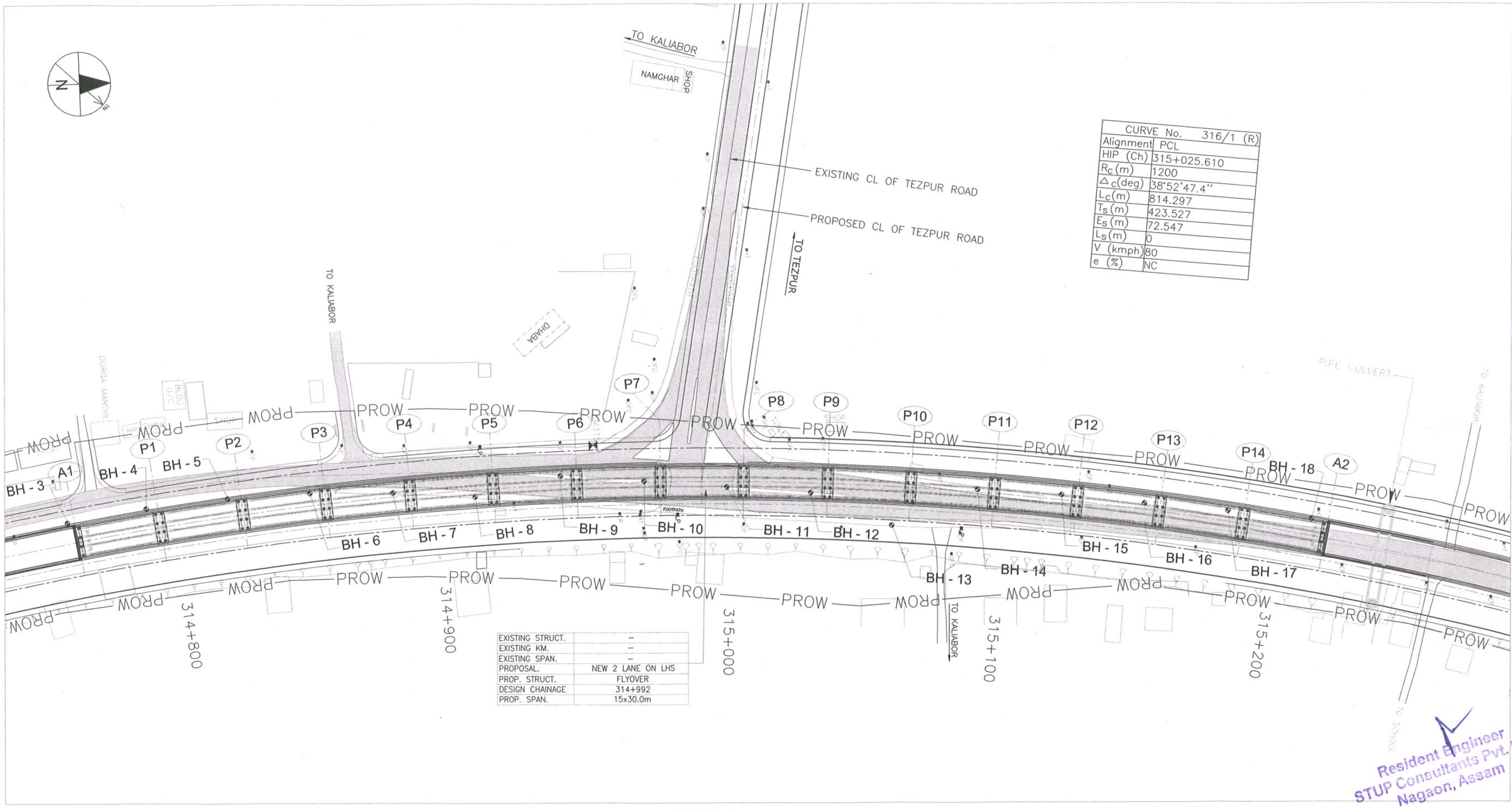

CURVE No.	316/1 (R)
Alignment	PCL
HIP (Ch)	315+025.610
R_c(m)	1200
Δ_c(deg)	38°52'47.4"
L_c(m)	814.297
T_s(m)	423.527
E_s(m)	72.547
L_s(m)	0
V (kmph)	80
e (%)	NC

EXISTING STRUCT.	–
EXISTING KM.	–
EXISTING SPAN.	–
PROPOSAL.	NEW 2 LANE ON LHS
PROP. STRUCT.	FLYOVER
DESIGN CHAINAGE	314+992
PROP. SPAN.	15x30.0m

Resident Engineer
STUP Consultants Pvt. Ltd.
Nagaon, Assam

KEY PLAN

FOR APPROVAL

Rev.	Date	Description on Revisions
R1	10-08-2018	Shifting of Junction as per NHIDCL's requirement
R0	22-11-2017	FIRST SUBMISSION

Revisions

CLIENT:- NATIONAL HIGHWAYS & INFRASTRUCTURE DEVELOPMENT CORPORATION LTD

AUTHORITY'S ENGINEER: STUP Consultants P. Ltd & Ayoleeza Consultants P. Ltd.
AUTHORISED SIGNATORY | DATE

PROOF CHECK CONSULTANT:- CETEST
AUTHORISED SIGNATORY | DATE 23/8/18

SAEFTY CONSULTANT:- Chaitanya Projects Consultancy Pvt. Ltd
AUTHORISED SIGNATORY | DATE

PROJECT: FOUR LANING OF NH-37 FROM RANGAGARA TO KALIABOR TINIALI (CH: 297.000 KM TO CH: 315.315 KM) IN NAGAON DISTRICT IN THE STATE OF ASSAM UNDER SARDP-NE, PHASE A ON EPC MODE

EPC CONTRACTOR:- SIMPLEX INFRASTRUCTURES LIMITED
27, SHAKESPEARE SARANI, KOLKATA-17, INDIA

CONSULTANTS:- AECOM
9th Floor, Infinity Tower C DLF Cyber City
DLF Phase II, Gurgaon-122002, Haryana, India

DRAWN	DESIGN	CHECKED BY	APPROVED BY
MANISH VERMA	S. YADAV	S. P. SINGH	S. RASTOGI

SCALE:- AS SHOWN

TITLE:- GENERAL ARRANGEMENT DRAWING FOR FLYOVER AT CH. 314+992 (SCH. B CH. 314+747)

DRAWING NO.:- AECOM-DELD15159-DD-DWG-FO-314+992-GAD-01 (SH 1 OF 6)

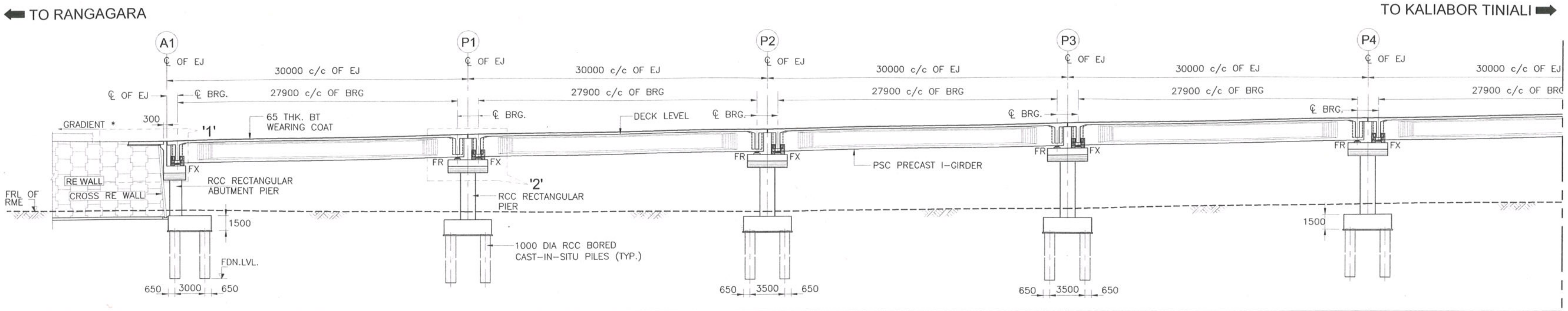

	A1	P1	P2	P3	P4
FRL	73.711	74.307	74.903	75.498	76.076
FRL OF RME	68.352	68.340	68.364	68.431	68.509
PILE CAP TOP	67.602	67.590	67.614	67.681	67.759
FOUNDING LVL.	36.102	36.090	36.114	36.181	36.259
DESIGN CHAINAGE AT PROPOSED CL	314+768.523	314+798.324	314+828.126	314+857.927	314+887.728

LONGITUDINAL ELEVATION
(SCALE : 1:300)

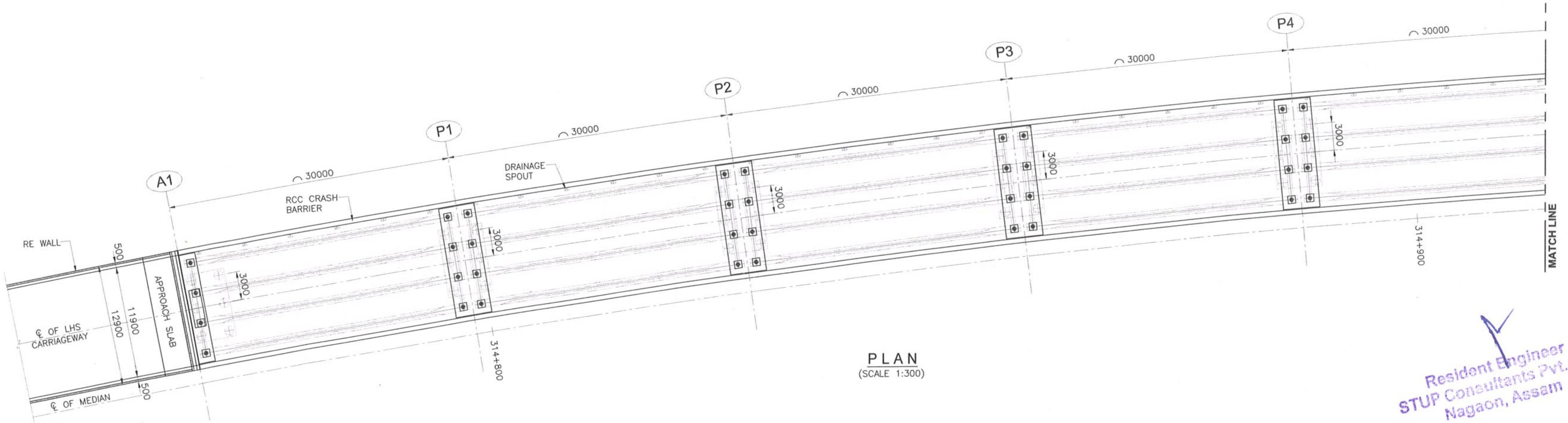

PLAN
(SCALE 1:300)

Resident Engineer
STUP Consultants Pvt. Ltd.
Nagaon, Assam

FOR APPROVAL

Rev.	Date	Description on Revisions
R1	10-08-2018	Shifting of Junction as per NHIDCL's requirement
R0	22-11-2017	FIRST SUBMISSION

Revisions

CLIENT:- NATIONAL HIGHWAYS & INFRASTRUCTURE DEVELOPMENT CORPORATION LTD

AUTHORITY'S ENGINEER: STUP Consultants P. Ltd & Ayoleeza Consultants P. Ltd.
AUTHORISED SIGNATORY | DATE

PROOF CHECK CONSULTANT:- CETEST KOLKATA 700 092
AUTHORISED SIGNATORY | DATE

SAEFTY CONSULTANT:- Chaitanya Projects Consultancy Pvt. Ltd
AUTHORISED SIGNATORY | DATE

PROJECT: FOUR LANING OF NH-37 FROM RANGAGARA TO KALIABOR TINIALI (CH: 297.000 KM TO CH: 315.315 KM) IN NAGAON DISTRICT IN THE STATE OF ASSAM UNDER SARDP-NE, PHASE A ON EPC MODE

EPC CONTRACTOR:- SIMPLEX INFRASTRUCTURES LIMITED
27, SHAKESPEARE SARANI, KOLKATA-17, INDIA

CONSULTANTS:- AECOM
9th Floor, Infinity Tower C DLF Cyber City
DLF Phase II, Gurgaon-122002, Haryana, India

MANISH VERMA	S. YADAV	S.K. SINGH	S. RASTOGI
DRAWN	DESIGN	CHECKED BY	APPROVED BY

SCALE:- AS SHOWN

TITLE:- GENERAL ARRANGEMENT DRAWING FOR FLYOVER AT CH. 314+992 (SCH. B CH. 314+747)

DRAWING NO.:- AECOM-DELD15159-DD-DWG-FO-314+992-GAD-01 (SH 2 OF 6)

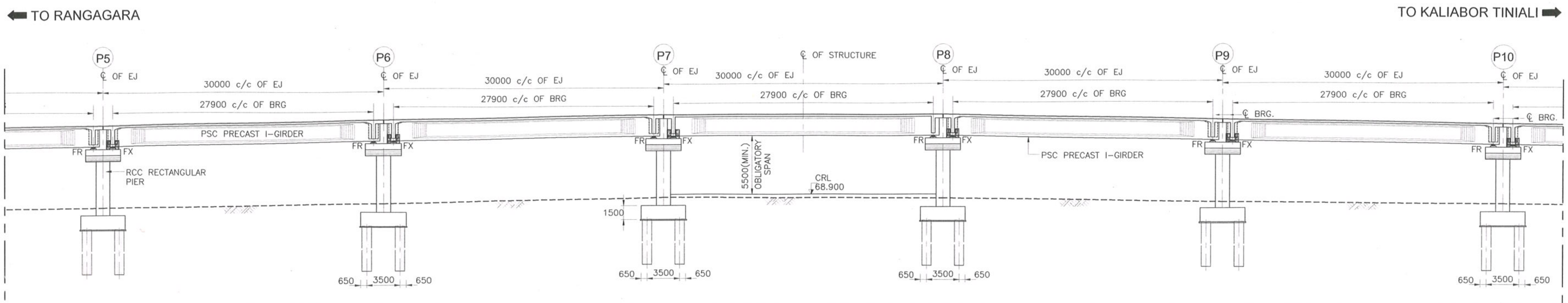

FRL	76.530	76.843	77.013	77.046	77.041	76.928	76.672
FRL OF RME	68.587	68.665	68.728	---	68.753	68.778	68.803
PILE CAP TOP	67.837	67.915	67.978	---	68.003	68.028	68.053
FOUNDING LVL.	36.337	36.415	36.478	---	36.503	36.528	36.553
DESIGN CHAINAGE AT PROPOSED CL	314+917.530	314+947.331	314+977.132	314+992	315+006.934	315+036.735	315+066.536

LONGITUDINAL ELEVATION
(SCALE : 1:300)

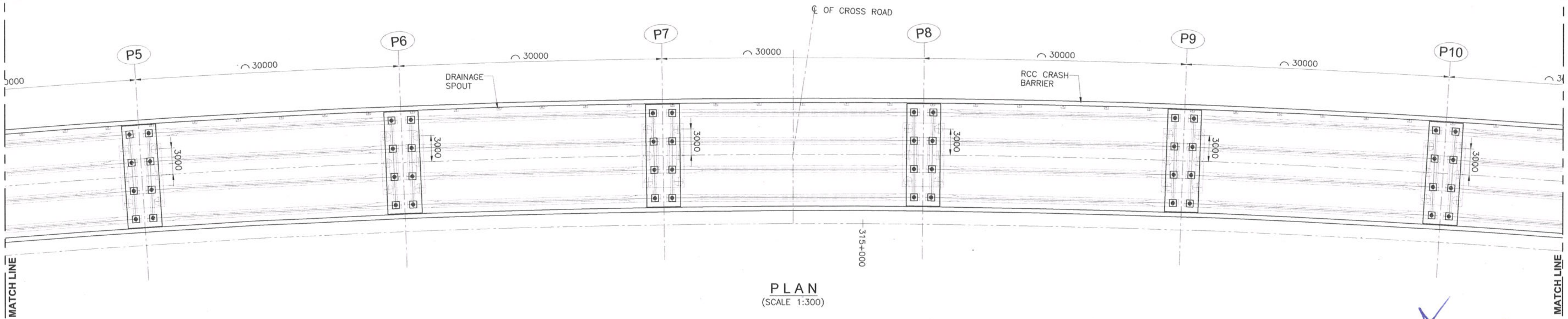

PLAN
(SCALE 1:300)

Resident Engineer
STUP Consultants Pvt. Ltd.
Nagaon, Assam

FOR APPROVAL

Rev.	Date	Description on Revisions
R1	10-08-2018	Shifting of Junction as per NHIDCL's requirement
R0	22-11-2017	FIRST SUBMISSION

Revisions

CLIENT:- NATIONAL HIGHWAYS & INFRASTRUCTURE DEVELOPMENT CORPORATION LTD

AUTHORITY'S ENGINEER: STUP Consultants P. Ltd & Ayoleeza Consultants P. Ltd.

AUTHORISED SIGNATORY | DATE

PROOF CHECK CONSULTANT:- CETEST

AUTHORISED SIGNATORY | DATE

SAEFTY CONSULTANT:- Chaitanya Projects Consultancy Pvt. Ltd

AUTHORISED SIGNATORY | DATE

PROJECT: FOUR LANING OF NH-37 FROM RANGAGARA TO KALIABOR TINIALI (CH: 297.000 KM TO CH: 315.315 KM) IN NAGAON DISTRICT IN THE STATE OF ASSAM UNDER SARDP-NE, PHASE A ON EPC MODE

EPC CONTRACTOR:- SIMPLEX INFRASTRUCTURES LIMITED
27, SHAKESPEARE SARANI, KOLKATA-17, INDIA

CONSULTANTS:- AECOM
9th Floor, Infinity Tower C DLF Cyber City
DLF Phase II, Gurgaon-122002, Haryana, India

DRAWN	DESIGN	CHECKED BY	APPROVED BY
MANISH VERMA	S. YADAV	S.P. SINGH	S. RASTOGI

SCALE:- AS SHOWN

TITLE:- GENERAL ARRANGEMENT DRAWING FOR FLYOVER AT CH. 314+992 (SCH. B CH. 314+747)

DRAWING NO.:- AECOM-DELD15159-DD-DWG-FO-314+992-GAD-01 (SH 3 OF 6)

⬅ TO RANGAGARA

TO KALIABOR TINIALI ➡

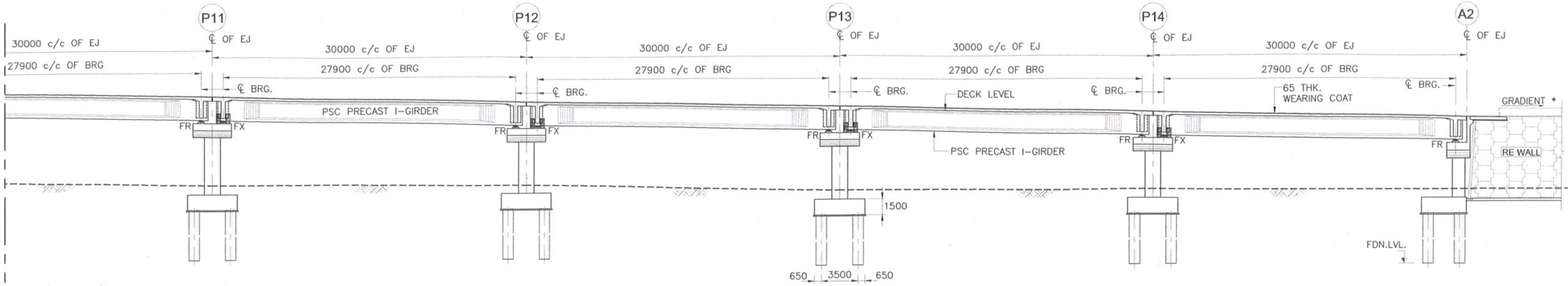

FRL	76.274	75.737	75.141	74.545	73.949
FRL OF RME	68.826	68.849	68.862	68.781	68.590
PILE CAP TOP	68.076	68.099	68.112	68.031	67.840
FOUNDING LVL.	36.576	36.599	36.612	36.531	36.340
DESIGN CHAINAGE AT PROPOSED CL	315+096.338	315+126.139	315+155.940	315+185.742	315+215.543

LONGITUDINAL ELEVATION

(SCALE : 1:300)

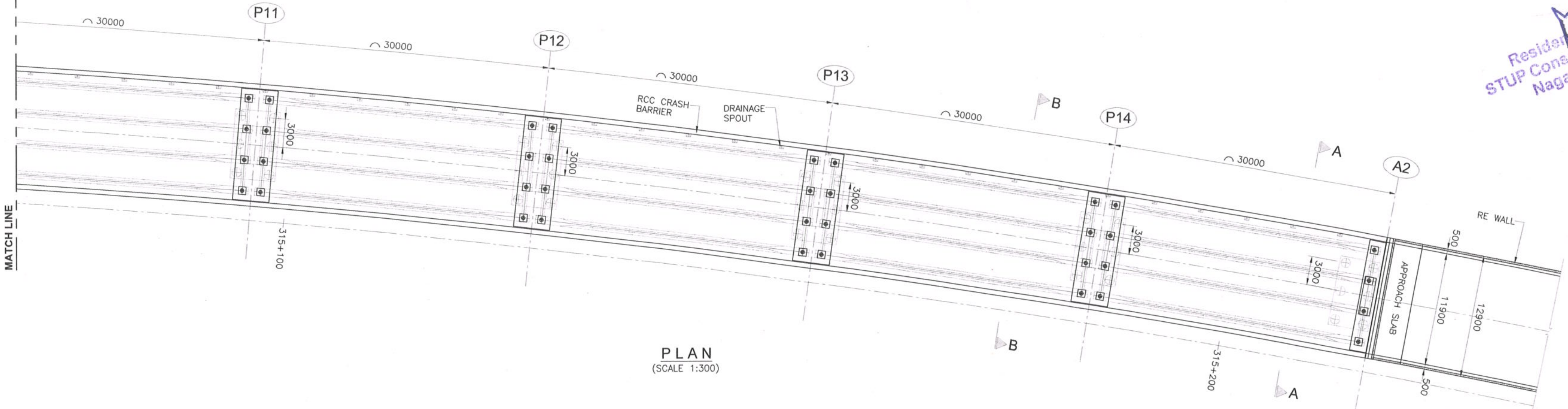

PLAN

(SCALE 1:300)

FOR APPROVAL

Rev.	Date	Description on Revisions
R1	10-08-2018	Shifting of Junction as per NHIDCL's requirement
R0	22-11-2017	FIRST SUBMISSION

Revisions

CLIENT:- NATIONAL HIGHWAYS & INFRASTRUCTURE DEVELOPMENT CORPORATION LTD

AUTHORITY'S ENGINEER: STUP Consultants P. Ltd & Ayoleeza Consultants P. Ltd.

AUTHORISED SIGNATORY | DATE

PROOF CHECK CONSULTANT:- CE TESTING COMPANY PVT. LTD.

AUTHORISED SIGNATORY | DATE

SAEFTY CONSULTANT:- Chaitanya Projects Consultancy Pvt. Ltd

AUTHORISED SIGNATORY | DATE

PROJECT: FOUR LANING OF NH-37 FROM RANGAGARA TO KALIABOR TINIALI (CH: 297.000 KM TO CH: 315.315 KM) IN NAGAON DISTRICT IN THE STATE OF ASSAM UNDER SARDP-NE, PHASE A ON EPC MODE

EPC CONTRACTOR:- SIMPLEX INFRASTRUCTURES LIMITED, 27, SHAKESPEARE SARANI, KOLKATA-17, INDIA

CONSULTANTS:- AECOM, 9th Floor, Infinity Tower C DLF Cyber City, DLF Phase II, Gurgaon-122002, Haryana, India

DRAWN	DESIGN	CHECKED BY	APPROVED BY
MANISH VERMA	S. YADAV	S. P. SINGH	D. RASTOGI

SCALE: AS SHOWN

TITLE:- GENERAL ARRANGEMENT DRAWING FOR FLYOVER AT CH. 314+992 (SCH. B CH. 314+747)

DRAWING NO.:- AECOM-DELD15159-DD-DWG-FO-314+992-GAD-01 (SH 4 OF 6)

Resident Engineer STUP Consultants Pvt. Ltd. Nagaon, Assam

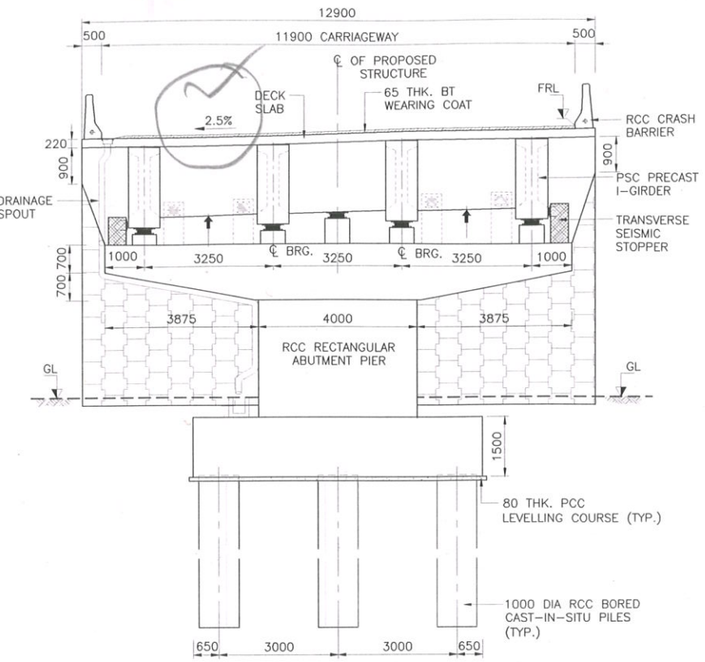

SECTION A-A
(SCALE : 1:100)

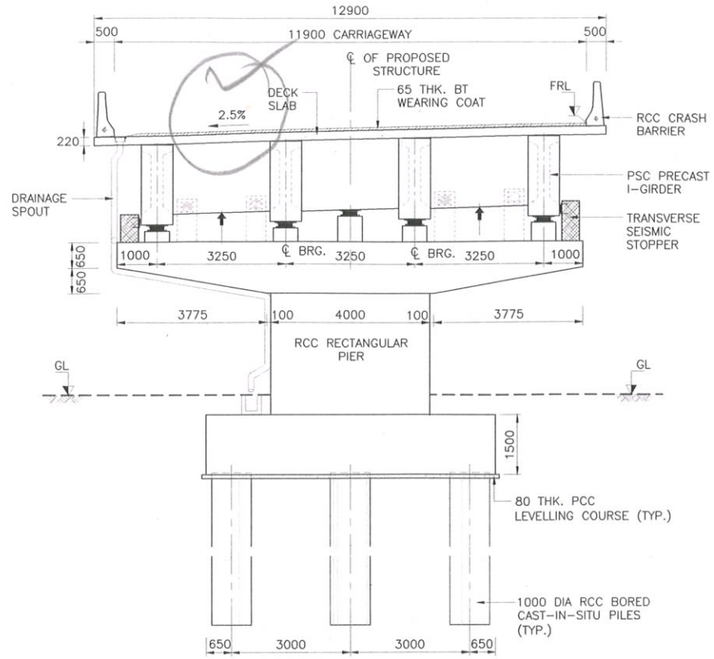

SECTION B-B
(SCALE : 1:100)

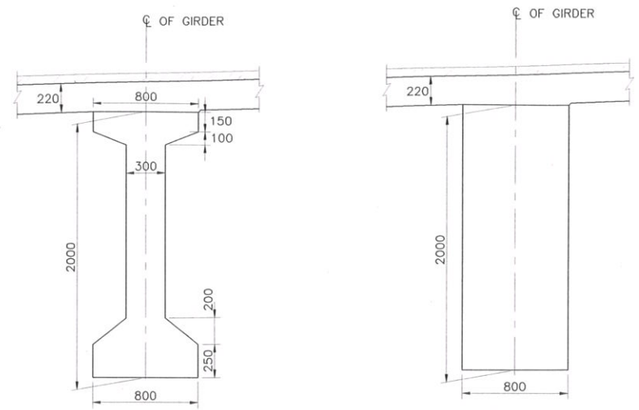

DETAIL OF PSC PRECAST I-GIRDER
(SCALE 1:30)

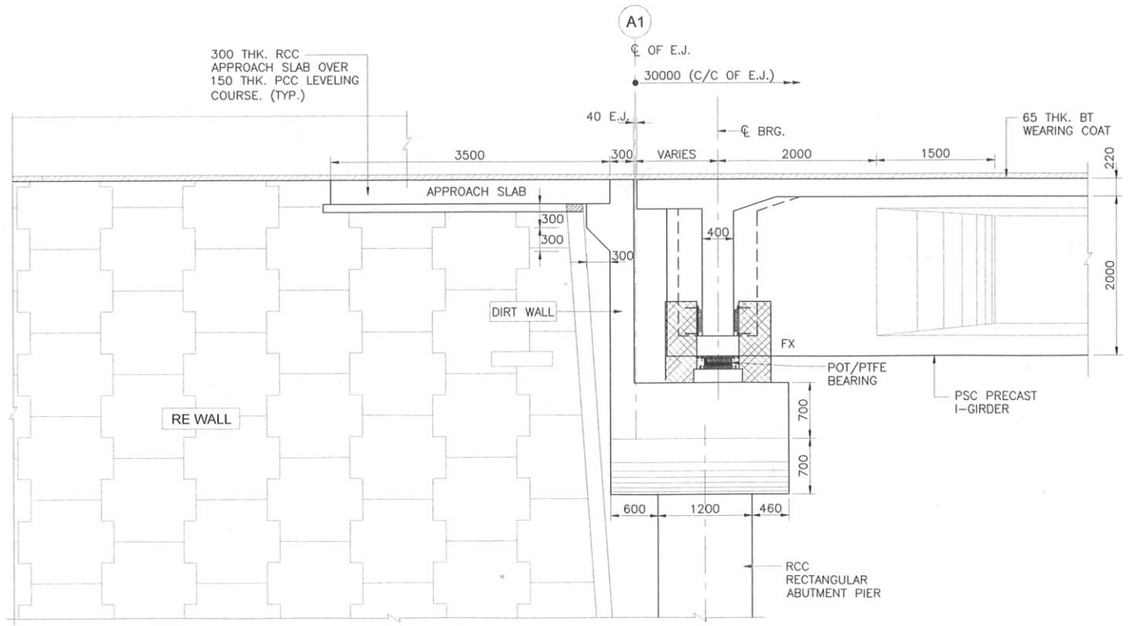

DETAIL-1
(SCALE 1:50)

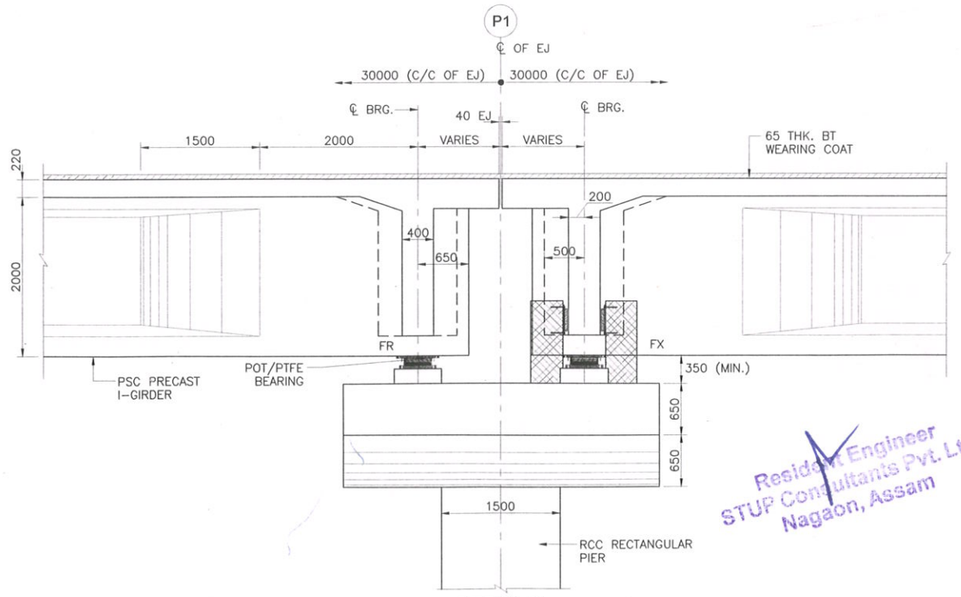

DETAIL-2
(SCALE 1:50)

Resident Engineer
STUP Consultants Pvt. Ltd.
Nagaon, Assam

FOR APPROVAL

Rev.	Date	Description on Revisions
R1	10-08-2018	Shifting of Junction as per NHIDCL's requirement
R0	22-11-2017	FIRST SUBMISSION

Revisions

CLIENT:- NATIONAL HIGHWAYS & INFRASTRUCTURE DEVELOPMENT CORPORATION LTD

AUTHORITY'S ENGINEER: STUP Consultants P. Ltd & Ayoleeza Consultants P. Ltd.

AUTHORISED SIGNATORY | DATE

PROOF CHECK CONSULTANT: CETEST (C E TESTING COMPANY PVT. LTD.)

AUTHORISED SIGNATORY | DATE

SAEFTY CONSULTANT:- Chaitanya Projects Consultancy Pvt. Ltd

AUTHORISED SIGNATORY | DATE

PROJECT: FOUR LANING OF NH-37 FROM RANGAGARA TO KALIABOR TINIALI (CH: 297.000 KM TO CH: 315.315 KM) IN NAGAON DISTRICT IN THE STATE OF ASSAM UNDER SARDP-NE, PHASE A ON EPC MODE

EPC CONTRACTOR:- SIMPLEX INFRASTRUCTURES LIMITED, 27, SHAKESPEARE SARANI, KOLKATA-17, INDIA

CONSULTANTS:- AECOM India Pvt. Ltd.
9th Floor, Infinity Tower C DLF Cyber City, DLF Phase II, Gurgaon-122002, Haryana, India

MANISH VERMA	S. YADAV	S. P. SINGH	S. KASTOGI
DRAWN	DESIGN	CHECKED BY	APPROVED BY

SCALE:- AS SHOWN

TITLE:- GENERAL ARRANGEMENT DRAWING FOR FLYOVER AT CH. 314+992 (SCH. B CH. 314+747)

DRAWING NO.:- AECOM-DELD15159-DD-DWG-FO-314+992-GAD-01 (SH 5 OF 6)

BORE HOLE DETALS

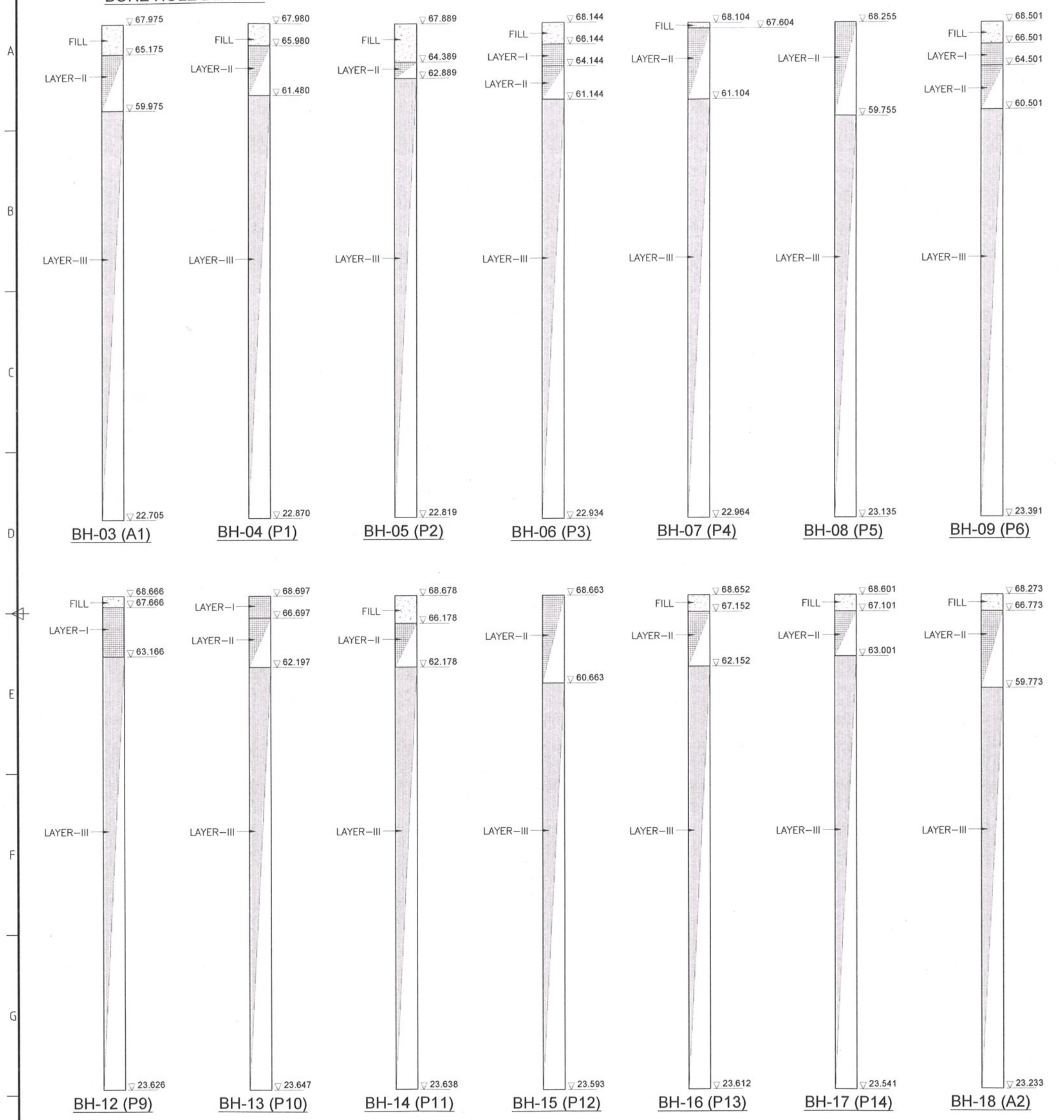

LEGEND FOR BORE HOLE

SYMBOL	DESCRIPTION
	FILL - (yellowish gray silty sand/silty clay with pebble, gravels & kankar)
	LAYER-I - yellowish grey soft to medium stiff clayey silt/silty clay
	LAYER-II - yellowish grey loose to medium dense clayey sandy silt/silty sand
	LAYER-III - yellowish grey/brownish yellow medium dense to very dense silty sand with kankars in higher depths

NOTES:-

1. ALL DIMENSIONS ARE IN MILLIMETERS, LEVELS ARE IN METERS UNLESS OTHERWISE MENTIONED.
2. NO DIMENSION SHALL BE MEASURED FROM THE DRAWINGS. ONLY WRITTEN DIMENSIONS SHALL BE FOLLOWED.
3. THE DRAWING SHALL BE READ IN CONJUNCTION WITH RELEVANT HIGHWAY PLAN AND PROFILE DRAWINGS. FRL, BED LEVEL, CAMBER/SUPERELEVATION AND LAYOUT SHALL ALSO BE VERIFIED AT SITE BEFORE EXECUTION. DISCEPANCIES SHALL BE BROUGHT TO THE NOTICE OF THE ENGINEER FOR REVISION IN DRAWINGS, IF ANY.
4. CHAINAGE OF THE STRUCTURE IS AT THE CENTER LINE OF THE PROPOSED STRUCTURE.
5. THE REINFORCEMENT SHALL BE HYSD BARS OF GRADE DESIGNATION Fe 500D CONFORMING TO IS 1786-2008 AND IRC 112-2011.
6. CONCRETE SHALL BE DESIGN MIX WITH A MINIMUM 28 DAYS CHARACTERISTIC CUBE STRENGTH FOR DIFFERENT ELEMENTS AS FOLLOWS:
   a.PSC PRECAST I-GIRDER M45
   b.RCC DECK SLAB & CROSS GIRDER M40
   c.RCC ABUT. & ABUT. CAP M35
   d.RCC PILE & PILE CAP M35
   e.RCC CRASH BARRIER M40
   f.RCC APPROACH SLAB M30
   g.PCC LEVELING COURSE M15
   h.RCC PEDESTALS M40
   i. RCC SEISMIC STOPPER M35
7. CLEAR COVER TO OUTER STEEL SHALL BE AS FOLLOWS:-
   a.PSC PRECAST I-GIRDER 40MM
   b.RCC DECK SLAB 40MM
   c.RCC ABUT. / PIER 40MM
   d.RCC ABUT. / PIER CAP 40MM
   e.RCC SEISMIC STOPPERS 40MM
   f.RCC PILE & PILE CAP 75MM
   g.RCC CRASH BARRIER 40MM
8. 65 THK. BITUMINOUS WEARING COAT SHALL BE ADOPTED IN CONFORMITY WITH SECTION 2702 OF MORTH SPECIFICATIONS.
9. DRAINAGE SPOUT 100MM DIA SPACED 5000MM C/C SHALL BE PROVIDED IN SUPERSTRUCTURE.
10. CONDITION OF EXPOSURE IS MODERATE.
11. THIS STRUCTURE LIES IN SEISMIC ZONE V.
12. THE STRUCTURE HAS BE DESIGNED FOR LIVE LOAD COMBINATIONS CONFORMING TO IRC: 6-2014.
13. SINGLE STRIP SEAL TYPE EXPANSION JOINT SHALL BE PROVIDED AS PER MODIFIED INTERIM SPECIFICATION FOR EXPANSION JOINTS ISSUED VIDE "MORTH" CIRCULAR NO. RW/NH-34059/1/98-S&R DATED 30-11-2000 & 25-01-2001.
14. TAR PAPER BEARING SHALL BE PROVIDED BETWEEN APPROACH SLAB & BRACKET.
15. THE MAXIMUM PILE LOAD (TONNES) AS PER DESIGN IS:

ABUTMENT		PIER		
NORMAL		NORMAL		
A1	A2	P1-P4	P5-P10	P11-P14
210.80		255.44	253.22	244.23
SEISMIC		SEISMIC		
282.75		353.24	352.69	336.28

WHICH IS LESS THAN PILE LOAD CAPACITY AT FOUNDING LEVEL AS PER GEOTECH REPORT.

REFERENCE DRAWINGS:

1.) SUPERSTRUCTURE:-
AECOM-DELD15159-DD-DWG-FO-314+992-SUP-01 (SH1 TO 16)
2.) SUBSTRUCTURE:-
AECOM-DELD15159-DD-DWG-FO-314+992-SUB-01 (SH1 TO 5)
AECOM-DELD15159-DD-DWG-FO-314+992-SUB-02 (SH1 TO 5)
AECOM-DELD15159-DD-DWG-FO-314+992-SUB-03 (SH1 TO 5)
AECOM-DELD15159-DD-DWG-FO-314+992-SUB-04 (SH1 TO 5)
3.) MISCELLANEOUS DWGS.
AECOM-DELD15159-MISC-01

LEGEND:-

FRL	-	FINISHED ROAD LEVEL
LHS	-	LEFT HAND SIDE
RHS	-	RIGHT HAND SIDE
GL	-	GROUND LEVEL
FDN	-	FOUNDATION
LVL	-	LEVEL
EJ	-	EXPANSION JOINT
CRL	-	CROSS ROAD LEVEL
FX	-	FIXED BEARING
FR	-	FREE BEARING

Resident Engineer
STUP Consultants Pvt. Ltd.
Nagaon, Assam

FOR APPROVAL

Rev.	Date	Description on Revisions
R1	10-08-2018	Shifting of Junction as per NHIDCL's requirement
R0	22-11-2017	FIRST SUBMISSION

Revisions

CLIENT:- NATIONAL HIGHWAYS & INFRASTRUCTURE DEVELOPMENT CORPORATION LTD

AUTHORITY'S ENGINEER: STUP Consultants P. Ltd & Ayoleeza Consultants P. Ltd. — AUTHORISED SIGNATORY | DATE

PROOF CHECK CONSULTANT:- CETEST — AUTHORISED SIGNATORY | DATE 23/8/18

SAEFTY CONSULTANT:- Chaitanya Projects Consultancy Pvt. Ltd — AUTHORISED SIGNATORY | DATE

PROJECT: FOUR LANING OF NH-37 FROM RANGAGARA TO KALIABOR TINIALI (CH: 297.000 KM TO CH: 315.315 KM) IN NAGAON DISTRICT IN THE STATE OF ASSAM UNDER SARDP-NE, PHASE A ON EPC MODE

EPC CONTRACTOR:- SIMPLEX INFRASTRUCTURES LIMITED, 27, SHAKESPEARE SARANI, KOLKATA-17, INDIA

CONSULTANTS:- AECOM, 9th Floor, Infinity Tower C, DLF Cyber City, DLF Phase II, Gurgaon-122002, Haryana, India

DRAWN	DESIGN	CHECKED BY	APPROVED BY
MANISH VERMA	S. YADAV	E.P. SINGH	S. RASTOGI

SCALE:- AS SHOWN

TITLE:- GENERAL ARRANGEMENT DRAWING FOR FLYOVER AT CH. 314+992 (SCH. B CH. 314+747)

DRAWING NO.:- AECOM-DELD15159-DD-DWG-FO-314+992-GAD-01 (SH 6 OF 6)

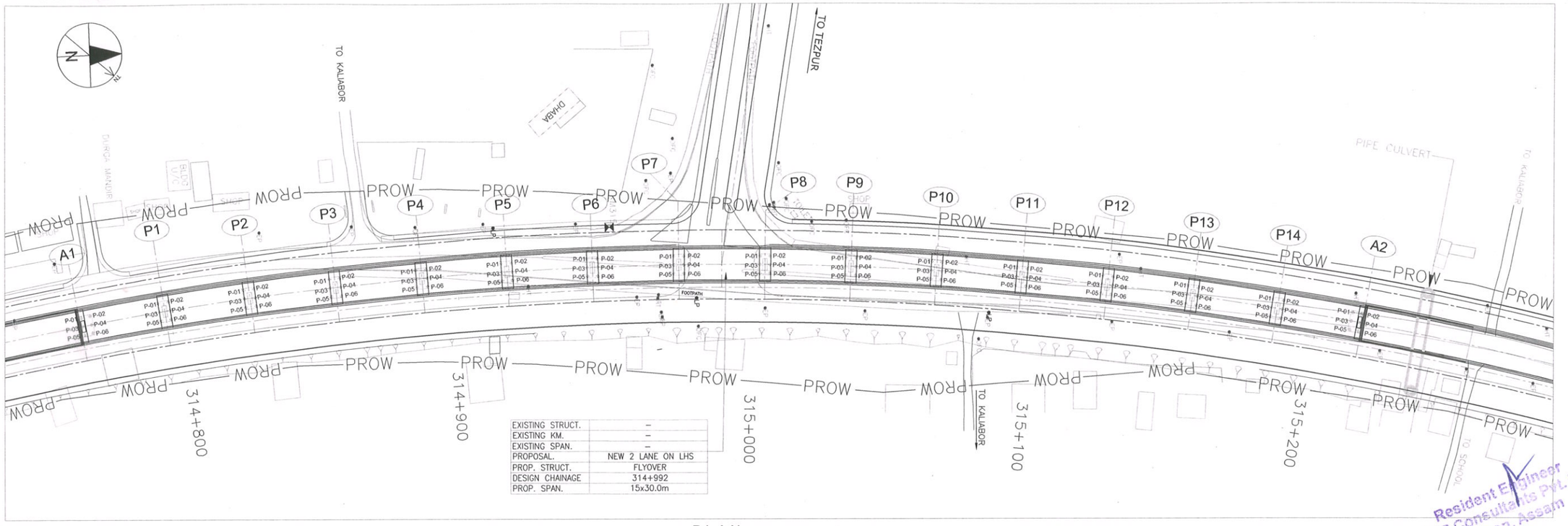

EXISTING STRUCT.	–
EXISTING KM.	–
EXISTING SPAN.	–
PROPOSAL.	NEW 2 LANE ON LHS
PROP. STRUCT.	FLYOVER
DESIGN CHAINAGE	314+992
PROP. SPAN.	15x30.0m

PLAN

PILE COORDINATES	
NOS.	ABUTMENT A1
01	X = 492844.565 Y = 2935064.991
02	X = 492844.109 Y = 2935067.956
03	X = 492847.530 Y = 2935065.448
04	X = 492847.074 Y = 2935068.413
05	X = 492850.495 Y = 2935065.904
06	X = 492850.039 Y = 2935068.869

PILE COORDINATES	
NOS.	PIER P1
01	X = 492840.800 Y = 2935092.206
02	X = 492840.354 Y = 2935095.678
03	X = 492843.775 Y = 2935092.588
04	X = 492843.330 Y = 2935096.060
05	X = 492846.751 Y = 2935092.970
06	X = 492846.305 Y = 2935096.442

PILE COORDINATES	
NOS.	PIER P2
01	X = 492837.380 Y = 2935122.085
02	X = 492837.021 Y = 2935125.567
03	X = 492840.364 Y = 2935122.393
04	X = 492840.006 Y = 2935125.875
05	X = 492843.349 Y = 2935122.700
06	X = 492842.990 Y = 2935126.182

PILE COORDINATES	
NOS.	PIER P3
01	X = 492834.704 Y = 2935152.040
02	X = 492834.432 Y = 2935155.530
03	X = 492837.695 Y = 2935152.273
04	X = 492837.423 Y = 2935155.762
05	X = 492840.685 Y = 2935152.506
06	X = 492840.414 Y = 2935155.995

PILE COORDINATES	
NOS.	PIER P4
01	X = 492832.772 Y = 2935182.052
02	X = 492832.587 Y = 2935185.547
03	X = 492835.767 Y = 2935182.210
04	X = 492835.583 Y = 2935185.705
05	X = 492838.763 Y = 2935182.368
06	X = 492838.579 Y = 2935185.863

PILE COORDINATES	
NOS.	PIER P5
01	X = 492831.586 Y = 2935212.103
02	X = 492831.489 Y = 2935215.601
03	X = 492834.584 Y = 2935212.186
04	X = 492834.487 Y = 2935215.685
05	X = 492837.583 Y = 2935212.269
06	X = 492837.486 Y = 2935215.768

PILE COORDINATES	
NOS.	PIER P6
01	X = 492831.146 Y = 2935242.174
02	X = 492831.137 Y = 2935245.674
03	X = 492834.146 Y = 2935242.182
04	X = 492834.137 Y = 2935245.682
05	X = 492837.146 Y = 2935242.190
06	X = 492837.137 Y = 2935245.690

PILE COORDINATES	
NOS.	PIER P7
01	X = 492831.453 Y = 2935272.246
02	X = 492831.531 Y = 2935275.745
03	X = 492834.453 Y = 2935272.179
04	X = 492834.531 Y = 2935275.678
05	X = 492837.452 Y = 2935272.112
06	X = 492837.530 Y = 2935275.611

PILE COORDINATES	
NOS.	PIER P8
01	X = 492832.507 Y = 2935302.302
02	X = 492832.673 Y = 2935305.798
03	X = 492835.504 Y = 2935302.160
04	X = 492835.670 Y = 2935305.656
05	X = 492838.501 Y = 2935302.018
06	X = 492838.666 Y = 2935305.514

PILE COORDINATES	
NOS.	PIER P9
01	X = 492834.307 Y = 2935332.322
02	X = 492834.560 Y = 2935335.813
03	X = 492837.300 Y = 2935332.105
04	X = 492837.553 Y = 2935335.596
05	X = 492840.292 Y = 2935331.889
06	X = 492840.545 Y = 2935335.379

PILE COORDINATES	
NOS.	PIER P10
01	X = 492836.852 Y = 2935362.288
02	X = 492837.193 Y = 2935365.772
03	X = 492839.838 Y = 2935361.997
04	X = 492840.178 Y = 2935365.480
05	X = 492842.824 Y = 2935361.705
06	X = 492843.164 Y = 2935365.189

PILE COORDINATES	
NOS.	PIER P11
01	X = 492840.141 Y = 2935392.182
02	X = 492840.568 Y = 2935395.656
03	X = 492843.118 Y = 2935391.816
04	X = 492843.545 Y = 2935395.290
05	X = 492846.096 Y = 2935391.450
06	X = 492846.523 Y = 2935394.924

PILE COORDINATES	
NOS.	PIER P12
01	X = 492844.170 Y = 2935421.985
02	X = 492844.684 Y = 2935425.447
03	X = 492847.138 Y = 2935421.545
04	X = 492847.652 Y = 2935425.007
05	X = 492850.105 Y = 2935421.104
06	X = 492850.619 Y = 2935424.566

PILE COORDINATES	
NOS.	PIER P13
01	X = 492848.939 Y = 2935451.679
02	X = 492849.539 Y = 2935455.127
03	X = 492851.894 Y = 2935451.164
04	X = 492852.495 Y = 2935454.612
05	X = 492854.850 Y = 2935450.650
06	X = 492855.450 Y = 2935454.098

PILE COORDINATES	
NOS.	PIER P14
01	X = 492854.443 Y = 2935481.245
02	X = 492855.129 Y = 2935484.677
03	X = 492857.385 Y = 2935480.656
04	X = 492858.071 Y = 2935484.089
05	X = 492860.327 Y = 2935480.068
06	X = 492861.013 Y = 2935483.500

PILE COORDINATES	
NOS.	ABUTMENT A2
01	X = 492860.217 Y = 2935508.617
02	X = 492860.879 Y = 2935511.543
03	X = 492863.143 Y = 2935507.955
04	X = 492863.805 Y = 2935510.881
05	X = 492866.069 Y = 2935507.294
06	X = 492866.731 Y = 2935510.220

Resident Engineer
STUP Consultants Pvt. Ltd
Nagaon, Assam

FOR APPROVAL

Rev.	Date	Description on Revisions
R0	09-08-2018	REVISED SUBMISSION

Revisions

CLIENT:- NATIONAL HIGHWAYS & INFRASTRUCTURE DEVELOPMENT CORPORATION LTD

AUTHORITY'S ENGINEER: STUP Consultants P. Ltd & Ayoleeza Consultants P. Ltd.

PROOF CHECK CONSULTANT: CETEST

SAEFTY CONSULTANT:- Chaitanya Projects Consultancy Pvt. Ltd

PROJECT: FOUR LANING OF NH-37 FROM RANGAGARA TO KALIABOR TINIALI (CH: 297.000 KM TO CH: 315.315 KM) IN NAGAON DISTRICT IN THE STATE OF ASSAM UNDER SARDP-NE, PHASE A ON EPC MODE

EPC CONTRACTOR:- SIMPLEX INFRASTRUCTURES LIMITED, 27, SHAKESPEARE SARANI, KOLKATA-17, INDIA

CONSULTANTS:- AECOM, 9th Floor, Infinity Tower C DLF Cyber City, DLF Phase II, Gurgaon-122002, Haryana, India

AUTHORISED SIGNATORY	DATE	AUTHORISED SIGNATORY	DATE	AUTHORISED SIGNATORY	DATE

DRAWN	DESIGN	CHECKED BY	APPROVED BY
MANISH VERMA	S. YADAV	S.P. SINGH	S. RASTOGI

SCALE:- AS SHOWN

TITLE:- COORDINATES FOR FLYOVER AT CH. 314+992 (SCH. B CH. 314+747)

DRAWING NO.:- AECOM-DELD15159-DD-DWG-FO-314+992-CRD-01

REV. R0

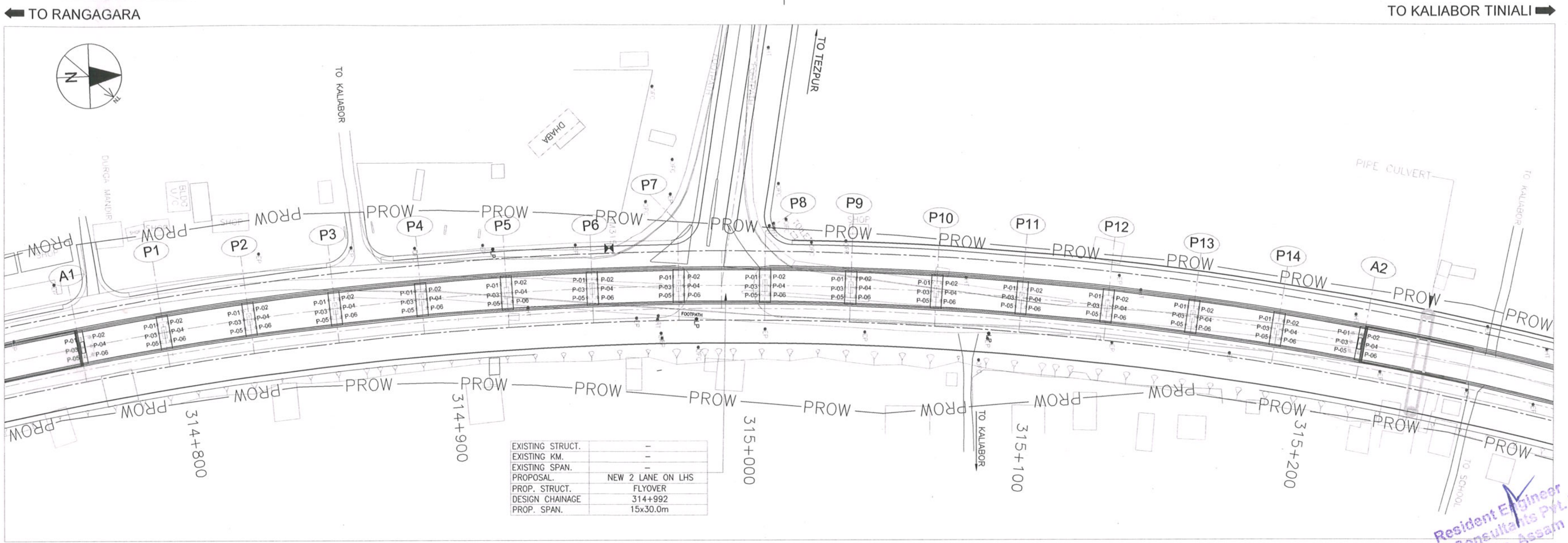

PLAN

Resident Engineer
STUP Consultants Pvt. Ltd.
Nagaon, Assam

PILE COORDINATES	
NOS.	ABUTMENT A1
01	X = 492844.565 Y = 2935064.991
02	X = 492844.109 Y = 2935067.956
03	X = 492847.530 Y = 2935065.448
04	X = 492847.074 Y = 2935068.413
05	X = 492850.495 Y = 2935065.904
06	X = 492850.039 Y = 2935068.869

PILE COORDINATES	
NOS.	PIER P1
01	X = 492840.800 Y = 2935092.206
02	X = 492840.354 Y = 2935095.678
03	X = 492843.775 Y = 2935092.588
04	X = 492843.330 Y = 2935096.060
05	X = 492846.751 Y = 2935092.970
06	X = 492846.305 Y = 2935096.442

PILE COORDINATES	
NOS.	PIER P2
01	X = 492837.380 Y = 2935122.085
02	X = 492837.021 Y = 2935125.567
03	X = 492840.364 Y = 2935122.393
04	X = 492840.006 Y = 2935125.875
05	X = 492843.349 Y = 2935122.700
06	X = 492842.990 Y = 2935126.182

PILE COORDINATES	
NOS.	PIER P3
01	X = 492834.704 Y = 2935152.040
02	X = 492834.432 Y = 2935155.530
03	X = 492837.695 Y = 2935152.273
04	X = 492837.423 Y = 2935155.762
05	X = 492840.685 Y = 2935152.506
06	X = 492840.414 Y = 2935155.995

PILE COORDINATES	
NOS.	PIER P4
01	X = 492832.772 Y = 2935182.052
02	X = 492832.587 Y = 2935185.547
03	X = 492835.767 Y = 2935182.210
04	X = 492835.583 Y = 2935185.705
05	X = 492838.763 Y = 2935182.368
06	X = 492838.579 Y = 2935185.863

PILE COORDINATES	
NOS.	PIER P5
01	X = 492831.586 Y = 2935212.103
02	X = 492831.489 Y = 2935215.601
03	X = 492834.584 Y = 2935212.186
04	X = 492834.487 Y = 2935215.685
05	X = 492837.583 Y = 2935212.269
06	X = 492837.486 Y = 2935215.768

PILE COORDINATES	
NOS.	PIER P6
01	X = 492831.146 Y = 2935242.174
02	X = 492831.137 Y = 2935245.674
03	X = 492834.146 Y = 2935242.182
04	X = 492834.137 Y = 2935245.682
05	X = 492837.146 Y = 2935242.190
06	X = 492837.137 Y = 2935245.690

PILE COORDINATES	
NOS.	PIER P7
01	X = 492831.453 Y = 2935272.246
02	X = 492831.531 Y = 2935275.745
03	X = 492834.453 Y = 2935272.179
04	X = 492834.531 Y = 2935275.678
05	X = 492837.452 Y = 2935272.112
06	X = 492837.530 Y = 2935275.611

PILE COORDINATES	
NOS.	PIER P8
01	X = 492832.507 Y = 2935302.302
02	X = 492832.673 Y = 2935305.798
03	X = 492835.504 Y = 2935302.160
04	X = 492835.670 Y = 2935305.656
05	X = 492838.501 Y = 2935302.018
06	X = 492838.666 Y = 2935305.514

PILE COORDINATES	
NOS.	PIER P9
01	X = 492834.307 Y = 2935332.322
02	X = 492834.560 Y = 2935335.813
03	X = 492837.300 Y = 2935332.105
04	X = 492837.553 Y = 2935335.596
05	X = 492840.292 Y = 2935331.889
06	X = 492840.545 Y = 2935335.379

PILE COORDINATES	
NOS.	PIER P10
01	X = 492836.852 Y = 2935362.288
02	X = 492837.193 Y = 2935365.772
03	X = 492839.838 Y = 2935361.997
04	X = 492840.178 Y = 2935365.480
05	X = 492842.824 Y = 2935361.705
06	X = 492843.164 Y = 2935365.189

PILE COORDINATES	
NOS.	PIER P11
01	X = 492840.141 Y = 2935392.182
02	X = 492840.568 Y = 2935395.656
03	X = 492843.118 Y = 2935391.816
04	X = 492843.545 Y = 2935395.290
05	X = 492846.096 Y = 2935391.450
06	X = 492846.523 Y = 2935394.924

PILE COORDINATES	
NOS.	PIER P12
01	X = 492844.170 Y = 2935421.985
02	X = 492844.684 Y = 2935425.447
03	X = 492847.138 Y = 2935421.545
04	X = 492847.652 Y = 2935425.007
05	X = 492850.105 Y = 2935421.104
06	X = 492850.619 Y = 2935424.566

PILE COORDINATES	
NOS.	PIER P13
01	X = 492848.939 Y = 2935451.679
02	X = 492849.539 Y = 2935455.127
03	X = 492851.894 Y = 2935451.164
04	X = 492852.495 Y = 2935454.612
05	X = 492854.850 Y = 2935450.650
06	X = 492855.450 Y = 2935454.098

PILE COORDINATES	
NOS.	PIER P14
01	X = 492854.443 Y = 2935481.245
02	X = 492855.129 Y = 2935484.677
03	X = 492857.385 Y = 2935480.656
04	X = 492858.071 Y = 2935484.089
05	X = 492860.327 Y = 2935480.068
06	X = 492861.013 Y = 2935483.500

PILE COORDINATES	
NOS.	ABUTMENT A2
01	X = 492860.217 Y = 2935508.617
02	X = 492860.879 Y = 2935511.543
03	X = 492863.143 Y = 2935507.955
04	X = 492863.805 Y = 2935510.881
05	X = 492866.069 Y = 2935507.294
06	X = 492866.731 Y = 2935510.220

FOR APPROVAL

Rev.	Date	Description on Revisions
R0	09-08-2018	REVISED SUBMISSION
Revisions		

CLIENT:- NATIONAL HIGHWAYS & INFRASTRUCTURE DEVELOPMENT CORPORATION LTD

AUTHORITY'S ENGINEER: STUP Consultants P. Ltd & Ayoleeza Consultants P. Ltd. — AUTHORISED SIGNATORY — DATE

PROOF CHECK CONSULTANT:- CETEST — AUTHORISED SIGNATORY — DATE 23/8/18

SAEFTY CONSULTANT:- Chaitanya Projects Consultancy Pvt. Ltd — AUTHORISED SIGNATORY — DATE

PROJECT: FOUR LANING OF NH-37 FROM RANGAGARA TO KALIABOR TINIALI (CH: 297.000 KM TO CH: 315.315 KM) IN NAGAON DISTRICT IN THE STATE OF ASSAM UNDER SARDP-NE, PHASE A ON EPC MODE

EPC CONTRACTOR:- SIMPLEX INFRASTRUCTURES LIMITED, 27, SHAKESPEARE SARANI, KOLKATA-17, INDIA

CONSULTANTS:- AECOM, 9th Floor, Infinity Tower C DLF Cyber City, DLF Phase II, Gurgaon-122002, Haryana, India

MANISH VERMA	S. YADAV	S. P. SINGH	S. RASTOGI
DRAWN	DESIGN	CHECKED BY	APPROVED BY

SCALE:- AS SHOWN

TITLE:- COORDINATES FOR FLYOVER AT CH. 314+992 (SCH. B CH. 314+747)

DRAWING NO.:- AECOM-DELD15159-DD-DWG-FO-314+992-CRD-01

REV. R0

NATIONAL HIGHWAYS & INFRASTRUCTURE DEVELOPMENT CORPORATION LTD.

Four Laning of NH – 37 from Rangagara to Kaliabor Tiniali (Ch: 297.000 Km to Ch: 315.315 Km of NH-37) in Nagaon District in the State of Assam under SARDP – NE, Phase A, on EPC Basis

MICELLANEOUS & STANDARD DRAWINGS

AUGUST 2021

CONTRACTOR:-

SIMPLEX INFRASTRUCTURES LIMITED

CONSULTANTS:-

AECOM

AECOM India Private Limited

INDEX

DESCRIPTION	DRAWING NO.
COVER PAGE	
INDEX	
TYPICAL OF MINOR JUNCTION	
Minor Junction Type-Y	AECOM-DELD15159-DD-DWG-MISC-001
Minor Junction Type-T	AECOM-DELD15159-DD-DWG-MISC-002
Minor Junction Type-X	AECOM-DELD15159-DD-DWG-MISC-003
TYPICAL OF BUS BAY AND BUS SHELTER	
Typical Layout of Bus Bay	AECOM-DELD15159-DD-DWG-MISC-004
Detail of Bus Shelter	AECOM-DELD15159-DD-DWG-MISC-005
TYPICAL LAYOUT OF TRUCK LAY BYE	
Typical Layout of Truck Lay Bye	AECOM-DELD15159-DD-DWG-MISC-006
DETAIL OF W-BEAM CRASH BARRIERS	
Detail of W-Beam Crash Barriers	AECOM-DELD15159-DD-DWG-MISC-007
TYPICAL DETAIL OF TRAFFIC SIGNAGE	
Typical Details of Traffic Signs	AECOM-DELD15159-DD-DWG-MISC-008 (4 SHEETS)
Plan-Road Signage	AECOM-DELD15159-DD-DWG- RM- 009 To 028
Erection Details of Traffic Signs	AECOM-DELD15159-DD-DWG-MISC-029
TYPICAL DETAIL OF PAVEMENT MARKINGS	
Typical Road Markings for at - Grade Intersection	AECOM-DELD15159-DD-DWG-RM-030
Typical Road Markings for Median Opening	AECOM-DELD15159-DD-DWG-RM-031
Typical Road Markings for Bus Bay/Truck Layby	AECOM-DELD15159-DD-DWG-RM-032
Typical Road Markings for Grade Separated T junction	AECOM-DELD15159-DD-DWG-RM-033
Typical Road Markings for Entry & Exit Service Roads	AECOM-DELD15159-DD-DWG-RM-034
Plan - Road Markings	AECOM-DELD15159-DD-DWG-RM- 035 To 053
DETAIL OF KILOMETER STONE AND GUARD POST	
Typical Detail of Kilometer Stone and Guard Post	AECOM-DELD15159-DD-DWG-MISC-054(1of 2)
Typical Detail of Kilometer Stone and Guard Post	AECOM-DELD15159-DD-DWG-MISC-054(2of 2)
DETAIL OF OVERHEAD GANTRY	
Typical Detail of Gantry For Overhead Signs	AECOM-DELD15159-DD-DWG-MISC-055A
Typical Detail of Gantry For Overhead Signs	AECOM-DELD15159-DD-DWG-MISC-055B
DETAIL OF HIGHWAY LANDSCAPING	
Detail of Highway Landscaping	AECOM-DELD15159-DD-DWG-MISC-056

CHAITANYA PROJECTS CONSULTANCY PVT. LTD.

C.E. TESTING CO. PVT. LTD. KOLKATA

R0	Aug. 2021	First submission
Rev.	Date	Description on Revisions
		Revisions

CLIENT:- NATIONAL HIGHWAYS & INFRASTRUCTURE DEVELOPMENT CORPORATION LTD.

AUTHORITY'S ENGINEER: STUP Consultants P. Ltd & Ayoleeza Consultants P. Ltd.

AUTHORISED SIGNATORY | DATE

PROOF CHECK CONSULTANT:- C.E. TESTING Company Pvt. Ltd

AUTHORISED SIGNATORY | DATE

SAEFTY CONSULTANT:- Chaitanya Projects Consultancy Pvt. Ltd

AUTHORISED SIGNATORY | DATE

PROJECT: FOUR LANING OF NH-37 FROM RANGAGARA TO KALIABOR TINIALI (CH: 297.000 KM TO CH: 315.315 KM) IN NAGAON DISTRICT IN THE STATE OF ASSAM UNDER SARDP-NE, PHASE A ON EPC MODE

EPC CONTRACTOR:- SIMPLEX INFRASTRUCTURES LIMITED, 27, SHAKESPEARE SARANI, KOLKATA-17, INDIA

CONSULTANTS:- AECOM, 9th Floor, Infinity Tower C DLF Cyber City DLF Phase II, Gurgaon-122002, Haryana, India

DRAWN	DESIGN	CHECKED BY	APPROVED BY
		SL (Team Leader)	MSR (Design Director)

SCALE:- NTS

TITLE:- INDEX

DRAWING NO.:- AECOM-DELD15159-DD-DWG- REV. R0

AECOM India Private Limited Gurgaon

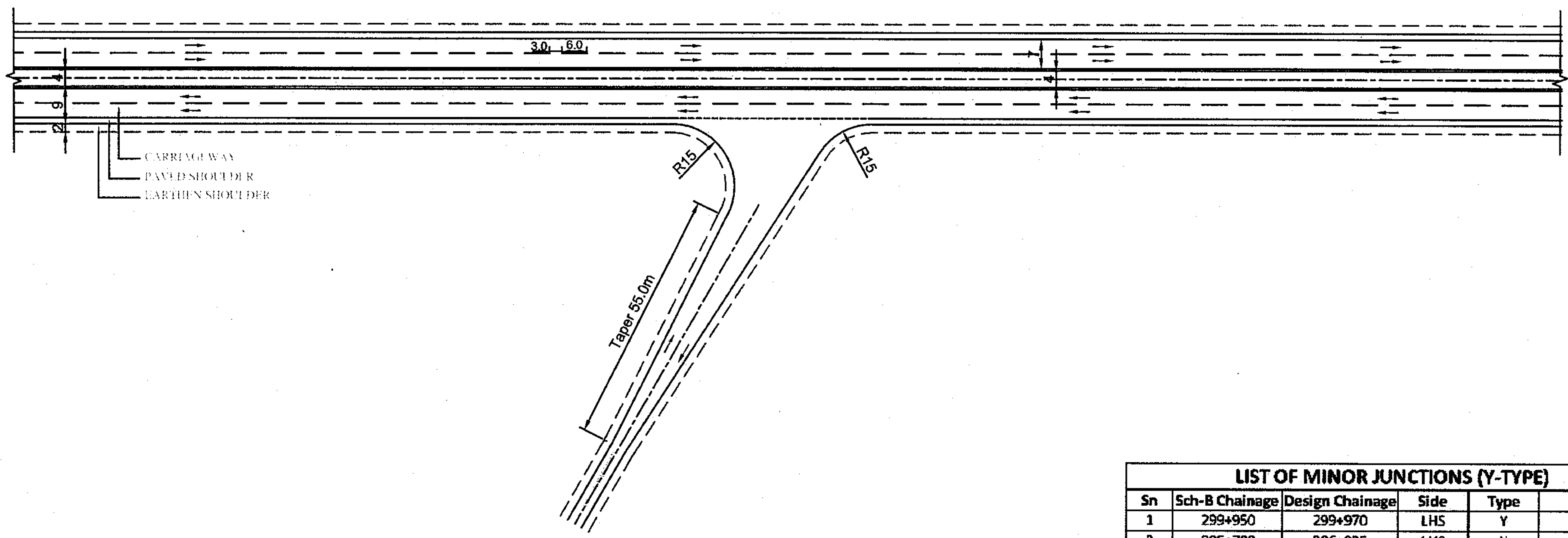

Layout for Y-Intersection

LIST OF MINOR JUNCTIONS (Y-TYPE)

Sn	Sch-B Chainage	Design Chainage	Side	Type	Remarks
1	299+950	299+970	LHS	Y	
2	305+700	306+025	LHS	Y	
3	306+500	306+270	LHS	Y	On Service Road
4		306+660	LHS	Y	On Service Road

Resident Engineer
STUP Consultants Pvt. Ltd.
Nagaon, Assam

Acting Team Leader
STUP Consultants Pvt. Ltd.
Nagaon, Assam

CHAITANYA PROJECTS CONSULTANCY PVT. LTD.

NOTE:
1. ALL DIMENSIONS AND CHAINAGES ARE IN METERS UNLESS OTHERWISE SPECIFIED.

C.E. TESTING CO. PVT. LTD. KOLKATA 700 0..

Rev.	Date	Description on Revisions
R0	Aug. 2021	First submission

Revisions

CLIENT:- NATIONAL HIGHWAYS & INFRASTRUCTURE DEVELOPMENT CORPORATION LTD.

AUTHORITY'S ENGINEER: STUP Consultants P. Ltd & Ayoleeza Consultants P. Ltd.

PROOF CHECKED CONSULTANT: C.E. TESTING Company Pvt. Ltd

SAEFTY CONSULTANT:- Chaitanya Projects Consultancy Pvt. Ltd

AUTHORISED SIGNATORY | DATE | AUTHORISED SIGNATORY | DATE | AUTHORISED SIGNATORY | DATE

PROJECT: FOUR LANING OF NH-37 FROM RANGAGARA TO KALIABOR TINIALI (CH: 297.000 KM TO CH: 315.315 KM) IN NAGAON DISTRICT IN THE STATE OF ASSAM UNDER SARDP-NE, PHASE A ON EPC MODE

EPC CONTRACTOR:- SIMPLEX INFRASTRUCTURES LIMITED
27, SHAKESPEARE SARANI, KOLKATA-17, INDIA

CONSULTANTS:- AECOM
9th Floor, Infinity Tower C DLF Cyber City
DLF Phase II, Gurgaon-122002, Haryana, India

DRAWN | DESIGN | CHECKED BY SL Team Leader | APPROVED BY MSR Design Director

SCALE:- NTS

TITLE:- MINOR JUNCTION TYPE

DRAWING NO.:- AECOM-DELD15159-DD-DWG- MISC-001

REV. R0

AECOM India Private Limited Gurgaon

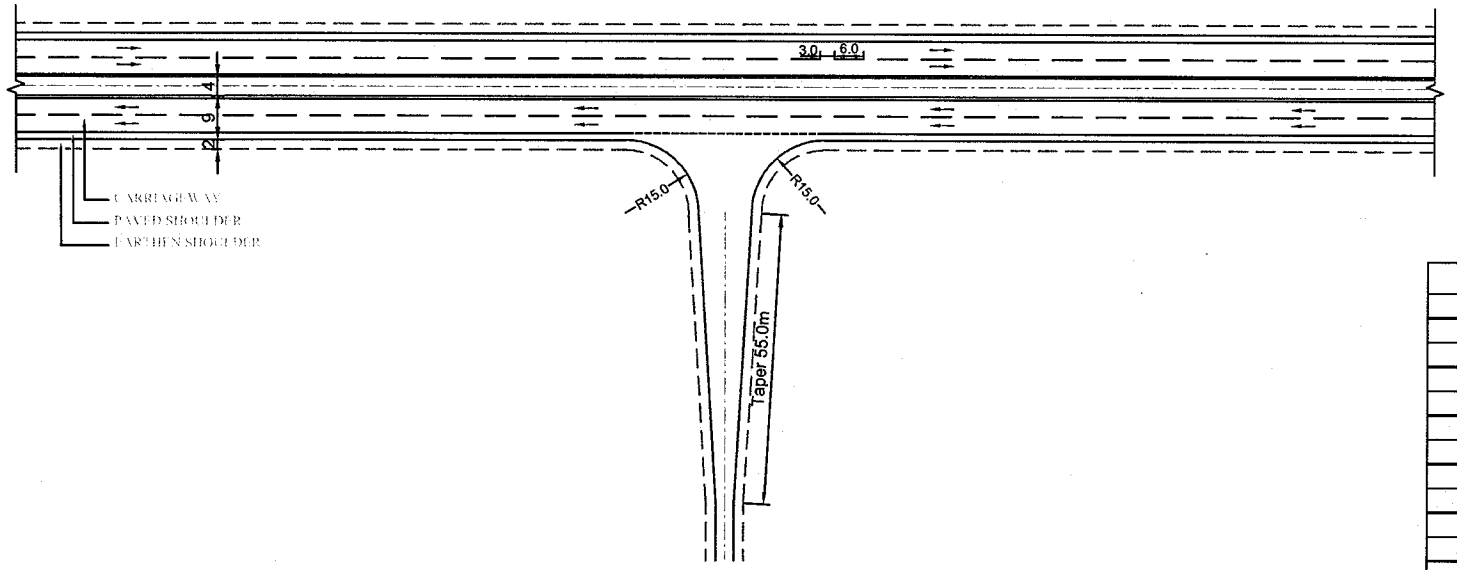

Left-in/Left out T-Intersection

Resident Engineer
STUP Consultants Pvt. Ltd.
Nagaon, Assam

LIST OF MINOR JUNCTIONS (T-TYPE)

Sn	Sch-B Chainage	Design Chainage	Side	Type	Remarks
1	297+900	297+900	RHS	T	
2	298+000	297+990	LHS	T	
3	298+800	298+810	LHS	T	
4	298+950	299+000	RHS	T	
5	299+100	299+180	RHS	T	
6	300+200	300+695	RHS	T	
7	300+800	300+745	LHS	T	
8	301+300	302+600	LHS	T	On Service Road
9	302+550	303+080	LHS	T	
10	303+100	304+370	LHS	T	
11	304+300	304+400	LHS	T	
12	304+500	304+620	LHS	T	
13	304+800	304+890	LHS	T	
14	305+120	305+195	RHS	T	
15	305+300	305+430	RHS	T	
16	306+800	306+655	LHS	T	On Service Road
17	307+130	306+900	RHS	T	On Service Road
18	307+200	307+260	LHS	T	
19	307+800	307+900	LHS	T	
20	308+800	308+665	LHS	T	
21	309+000	309+100	RHS	T	
22	309+500	309+380	RHS	T	
23	309+750	309+705	RHS	T	
24	309+900	309+985	RHS	T	
25	310+200	310+210	RHS	T	
26	310+430	310+520	RHS	T	
27	313+900	313+865	RHS	T	
28	314+600	314+775	LHS	T	
29	314+770	314+865	LHS	T	
30		314+992	LHS	T	

NOTE:
1. ALL DIMENSIONS AND CHAINAGES ARE IN METERS UNLESS OTHERWISE SPECIFIED.

Acting Team Leader
STUP Consultants Pvt. Ltd.
Nagaon, Assam

Rev.	Date	Description on Revision
R0	Aug. 2021	First submission

Revisions

CLIENT:- NATIONAL HIGHWAYS & INFRASTRUCTURE DEVELOPMENT CORPORATION LTD.

AUTHORITY'S ENGINEER: STUP Consultants P. Ltd & Ayoleeza Consultants P. Ltd.

PROOF CHECK CONSULTANT:- CTEST Consultancy Pvt. Ltd

SAEFTY CONSULTANT:- Chaitanya Projects Consultancy Pvt. Ltd

AUTHORISED SIGNATORY | DATE | AUTHORISED SIGNATORY | DATE | AUTHORISED SIGNATORY | DATE

PROJECT: FOUR LANING OF NH-37 FROM RANGAGARA TO KALIABOR TINIALI (CH: 297.000 KM TO CH: 315.315 KM) IN NAGAON DISTRICT IN THE STATE OF ASSAM UNDER SARDP-NE, PHASE A ON EPC MODE

EPC CONTRACTOR:- SIMPLEX INFRASTRUCTURES LIMITED, 27, SHAKESPEARE SARANI, KOLKATA-17, INDIA

CONSULTANTS:- AECOM, 9th Floor, Infinity Tower C DLF Cyber City, DLF Phase II, Gurgaon-122002, Haryana, India

DRAWN | DESIGN | SL Team Leader CHECKED BY | MSR Design Director APPROVED BY

SCALE:- NTS

TITLE:- MINOR JUNCTION TYPE-T

DRAWING NO.:- AECOM-DELD15159-DD-DWG- MISC-002

REV. R0

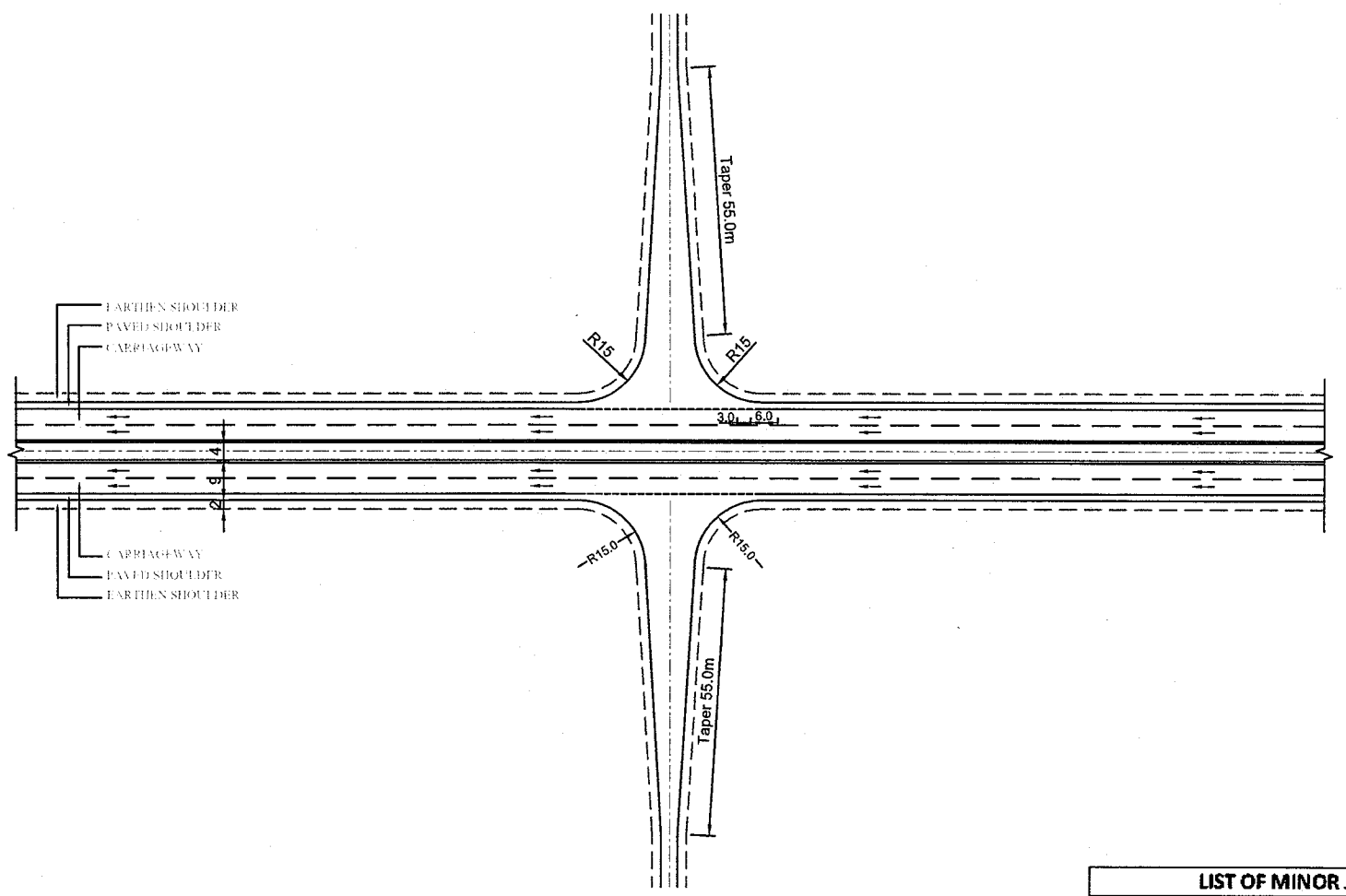

LAYOUT FOR X-INTERSECTION

LIST OF MINOR JUNCTIONS (X-TYPE)					
Sn	Sch-B Chainage	Design Chainage	Side	Type	Remarks
1	299+200	299+335	Both	X	
2	311+600	311+700	Both	X	
3		314+200	Both	X	

Resident Engineer
STUP Consultants Pvt. Ltd.
Nagaon, Assam

Acting Team Leader
STUP Consultants Pvt. Ltd.
Nagaon, Assam

CHAITANYA PROJECTS CONSULTANCY PVT. LTD.

NOTE:
1. ALL DIMENSIONS AND CHAINAGES ARE IN METERS UNLESS OTHERWISE SPECIFIED.

C.E. TESTING CO. PVT. LTD. KOLKATA 700 092

Rev.	Date	Description on Revision
R0	Aug. 2021	First submission

Revisions

CLIENT:- NATIONAL HIGHWAYS & INFRASTRUCTURE DEVELOPMENT CORPORATION LTD.

AUTHORITY'S ENGINEER: STUP Consultants P. Ltd & Ayoleeza Consultants P. Ltd.

PROOF CHECK CONSULTANT: CETEST Company Pvt. Ltd

SAEFTY CONSULTANT:- Chaitanya Projects Consultancy Pvt. Ltd

AUTHORISED SIGNATORY | DATE | AUTHORISED SIGNATORY | DATE | AUTHORISED SIGNATORY | DATE

PROJECT: FOUR LANING OF NH-37 FROM RANGAGARA TO KALIABOR TINIALI (CH: 297.000 KM TO CH: 315.315 KM) IN NAGAON DISTRICT IN THE STATE OF ASSAM UNDER SARDP-NE, PHASE A ON EPC MODE

EPC CONTRACTOR:- SIMPLEX INFRASTRUCTURES LIMITED, 27, SHAKESPEARE SARANI, KOLKATA-17, INDIA

CONSULTANTS:- AECOM, 9th Floor, Infinity Tower C DLF Cyber City, DLF Phase II, Gurgaon-122002, Haryana, India

DRAWN | DESIGN | CHECKED BY (SL, Team Leader) | APPROVED BY (MSR, Design Director)

SCALE:- NTS

TITLE:- MINOR JUNCTION TYPE

AECOM India Private Limited Gurgaon

DRAWING NO.:- AECOM-DELD15159-DD-DWG- MISC-003

REV. R0

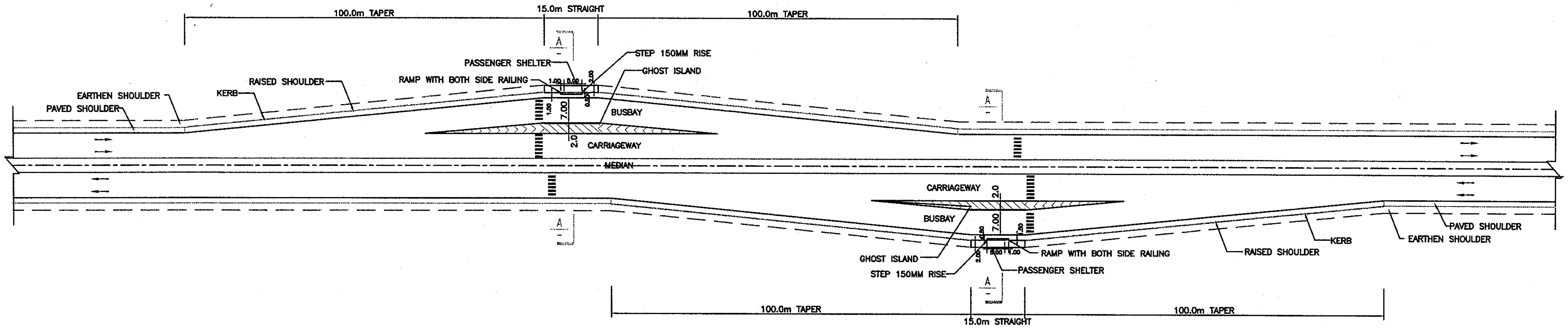

TYPICAL LAYOUT OF BUS BAY

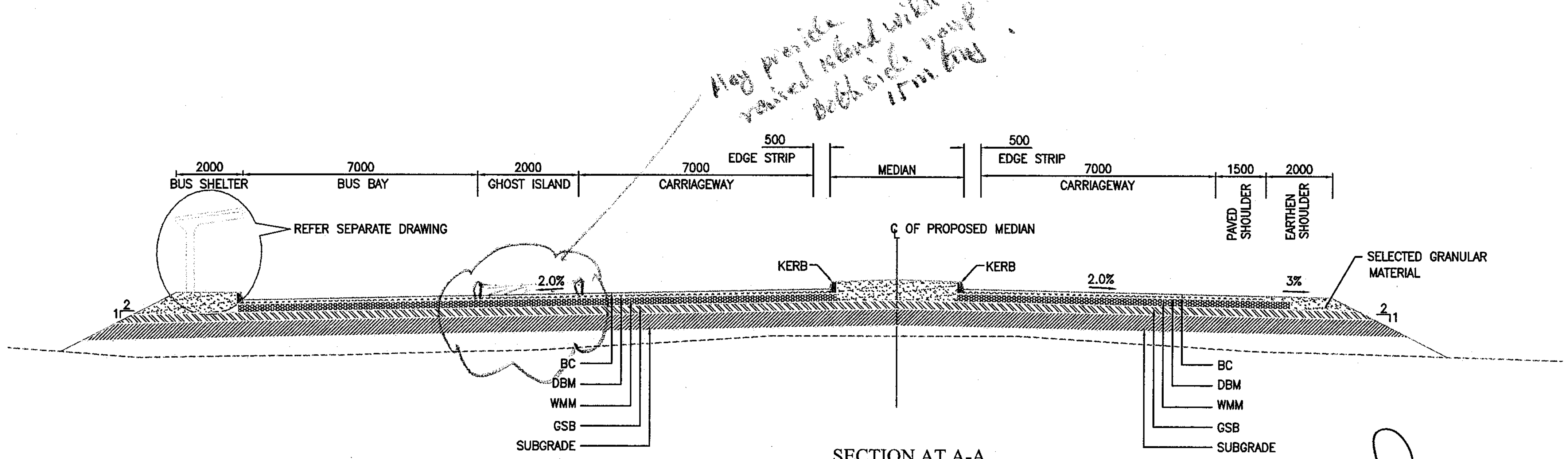

SECTION AT A-A

BUS BAY LOCATION		
Sr No.	Design Chainage	Side
1	299+100	LHS
2	299+550	RHS
3	302+985	RHS
4	303+210	LHS
5	306+800	BOTH
6	311+545	RHS
7	311+900	LHS
8	314+040	LHS
9	314+830	RHS

NOTE:
1. ALL DIMENSIONS AND MILLIMETER UNLESS OTHERWISE SPECIFIED.
2. LAYOUT & DESIGN OF BUS BAY SHALL CONFORM IRC SP: 84-2014
3. CROSS FALL OF BUS BAY SHALL CORRESPOND TO P&P DRAWING.

Resident Engineer
STUP Consultants Pvt. Ltd.
Nagaon, Assam

Acting Team Leader
STUP Consultants Pvt. Ltd.
Nagaon, Assam

R0	Aug. 2021	First submission
Rev.	Date	Description on Revisions
		Revisions

CLIENT:- NATIONAL HIGHWAYS & INFRASTRUCTURE DEVELOPMENT CORPORATION LTD.

AUTHORITY'S ENGINEER: STUP Consultants P. Ltd & Ayoleeza Consultants P. Ltd.

PROOF CHECKED CONSULTANT: C.E. TESTING CO. PVT. LTD

SAFETY CONSULTANT:- Chaitanya Projects Consultancy Pvt. Ltd

AUTHORISED SIGNATORY | DATE

PROJECT: FOUR LANING OF NH-37 FROM RANGAGARA TO KALIABOR TINIALI (CH: 297.000 KM TO CH: 315.315 KM) IN NAGAON DISTRICT IN THE STATE OF ASSAM UNDER SARDP-NE, PHASE A ON EPC MODE

EPC CONTRACTOR:- SIMPLEX INFRASTRUCTURES LIMITED, 27, SHAKESPEARE SARANI, KOLKATA-17, INDIA

CONSULTANTS:- AECOM, 9th Floor, Infinity Tower C DLF Cyber City, DLF Phase II, Gurgaon-122002, Haryana, India

DRAWN | DESIGN | CHECKED BY | APPROVED BY

SCALE:- NTS

TITLE:- TYPICAL LAYOUT OF BUS BAY

DRAWING NO.:- AECOM-DELD15159-DD-DWG- MISC-004

R0

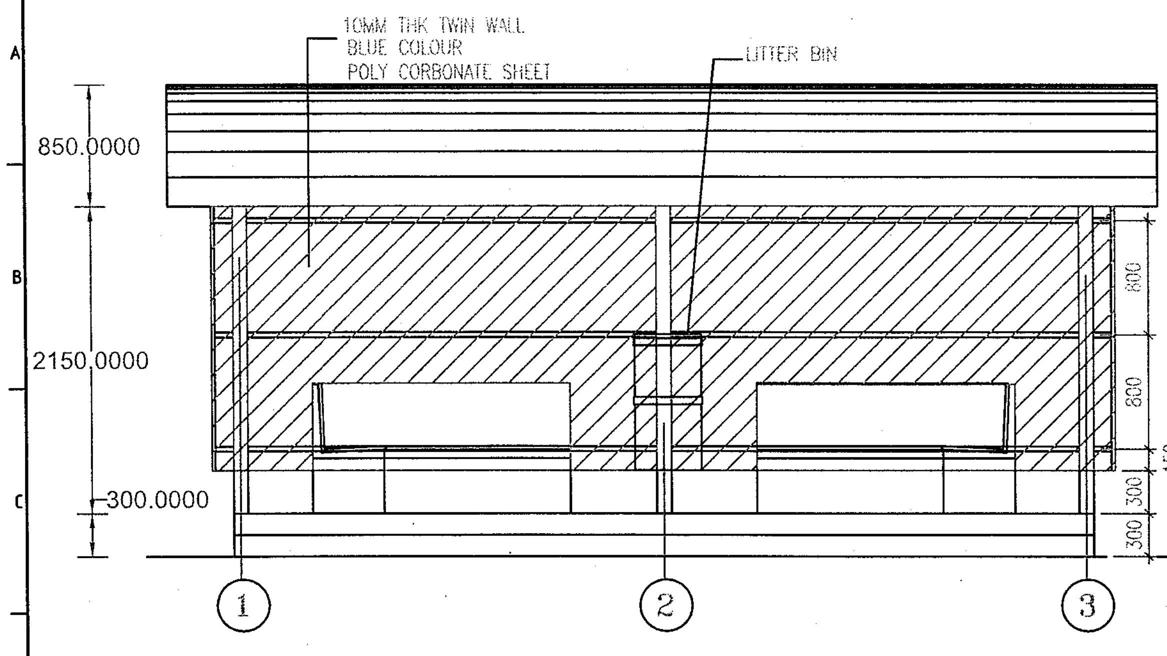

FRONT ELEVATION

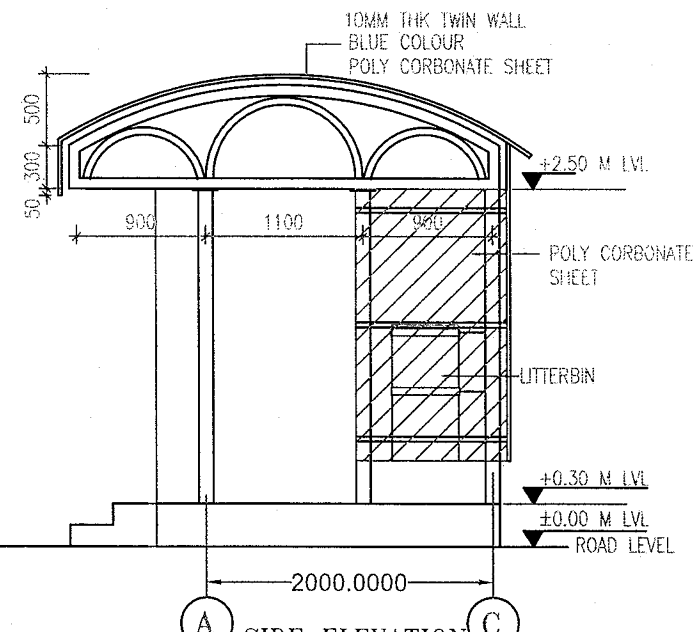

SIDE ELEVATION

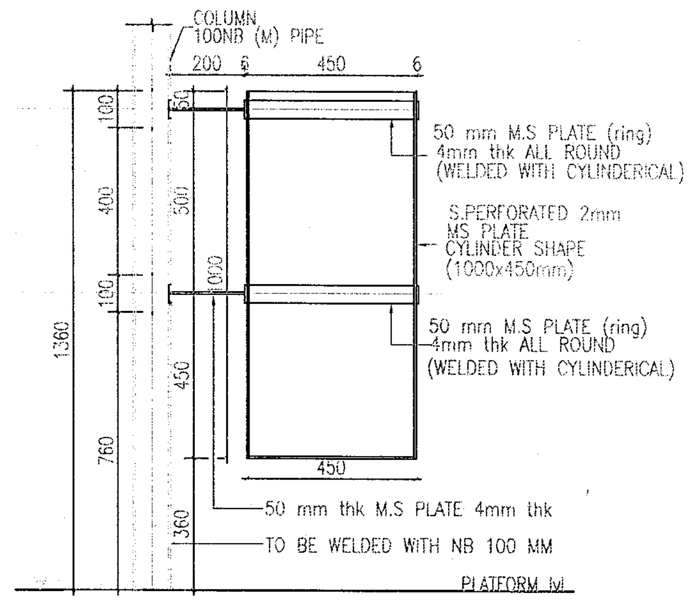

DETAIL-1
(LITTERBIN)

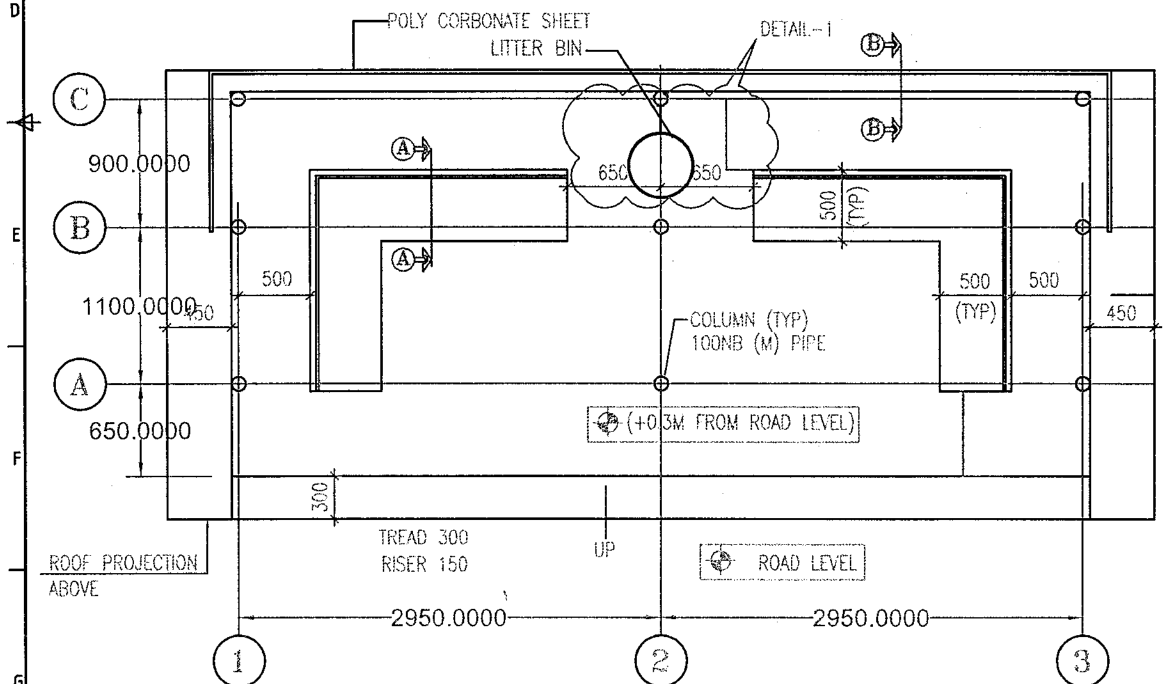

GROUND FLOOR PLAN

GENERAL SPECIFICATIONS

FLOORING	600x450x20mm THK. POLISHED KOTA STONE FLOORING PLACED IN C.M. 1:3 TO GIVE AN OVERALL THICKNESS OF 50mm
PAINTING FOR STEEL WORKS	2 COATS OF SYNTHETIC ENAMEL PAINT OVER ONE COAT OF PRIMER
ROOFING	CORRUGATED C.G.I. SHEET BLUE COLOUR
CLADDING	CORRUGATED C.G.I. SHEET BLUE COLOUR

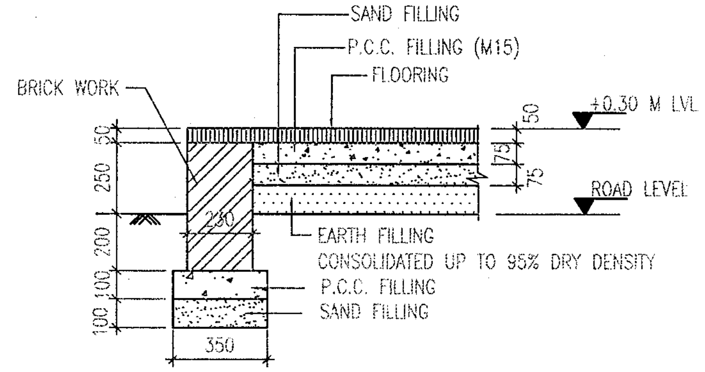

SECTION -BB
SCALE 1:25

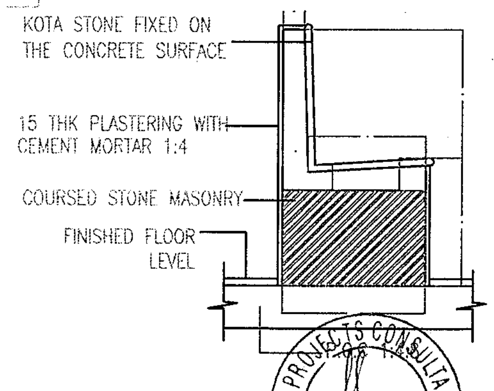

SECTION -AA
SCALE 1:50

Resident Engineer
STUP Consultants Pvt. Ltd
Nagaon, Assam

Acting Team Leader
STUP Consultants Pvt. Ltd.
Nagaon, Assam

NOTE:
1. ALL DIMENSIONS AND CHAINAGES ARE IN METERS UNLESS OTHERWISE SPECIFIED.
2. DETAILS OF BUS SHELTER SHALL BE FINALIZED BY VENDOR.

Rev.	Date	Description on Revision
R0	Aug. 2021	First submission

CLIENT: NATIONAL HIGHWAYS & INFRASTRUCTURE DEVELOPMENT CORPORATION LTD.

AUTHORITY'S ENGINEER: STUP Consultants P. Ltd & Ayoleeza Consultants P. Ltd.

PROOF CONSULTANT: C.E. TESTING Company Pvt. Ltd

SAFETY CONSULTANT: Chaitanya Projects Consultancy Pvt. Ltd

PROJECT: FOUR LANING OF NH-37 FROM RANGAGARA TO KALIABOR TINIALI (CH: 297.000 KM TO CH: 315.315 KM) IN NAGAON DISTRICT IN THE STATE OF ASSAM UNDER SARDP-NE, PHASE A ON EPC MODE

EPC CONTRACTOR: SIMPLEX INFRASTRUCTURES LIMITED, 27, SHAKESPEARE SARANI, KOLKATA-17, INDIA

CONSULTANT: AECOM, 9th Floor, Infinity Tower C DLF Cyber City, DLF Phase II, Gurgaon-122002, Haryana, India

SCALE: NTS

TITLE: DETAILS OF BUS SHELTER

DRAWING NO.: AECOM-DELD15159-DD-DWG- MISC-005

REV: R0

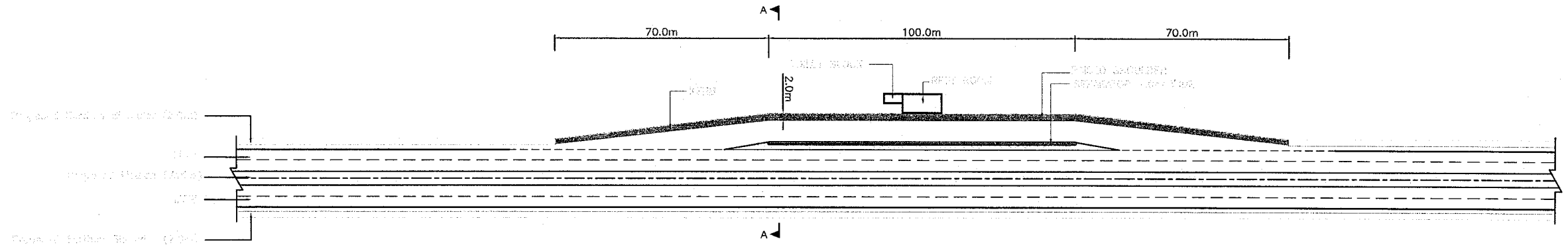

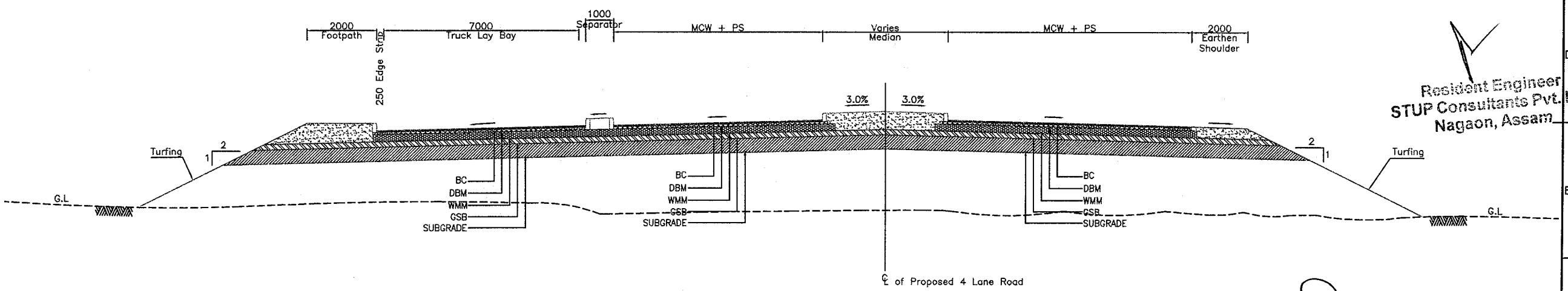

Resident Engineer
STUP Consultants Pvt. Ltd.
Nagaon, Assam

Acting Team Leader
STUP Consultants Pvt. Ltd.
Nagaon, Assam

TRUCK LAYBAY LOCATION			
Sr No.	Design Chainage		Side
	From	To	
1	304+117	304+357	LHS

Notes:

1. ALL DIMENSIONS ARE MILLIMETERS UNLESS OTHERWISE SPECIFIED.
2. LAYOUT & DESIGN OF BUS BAY SHALL CONFORM IRC SP: 84–2014.
3. CROSS FALL OF TRUCK LAY BYE SHALL CORRESPOND TO P&P DRAWING.

Rev.	Date	Description on Revision
R0	Aug. 2021	First submission

Revisions

CLIENT:- NATIONAL HIGHWAYS & INFRASTRUCTURE DEVELOPMENT CORPORATION LTD.

AUTHORITY'S ENGINEER: STUP Consultants P. Ltd & Ayoleeza Consultants P. Ltd.

PROOF CHECK CONSULTANT: C.E. TESTING Company Pvt. Ltd

SAFETY CONSULTANT:- Chaitanya Projects Consultancy Pvt. Ltd

PROJECT: FOUR LANING OF NH-37 FROM RANGAGARA TO KALIABOR TINIALI (CH: 297.000 KM TO CH: 315.315 KM) IN NAGAON DISTRICT IN THE STATE OF ASSAM UNDER SARDP-NE, PHASE A ON EPC MODE

EPC CONTRACTOR:- SIMPLEX INFRASTRUCTURES LIMITED, 27, SHAKESPEARE SARANI, KOLKATA-17, INDIA

CONSULTANTS:- AECOM, 9th Floor, Infinity Tower C DLF Cyber City, DLF Phase II, Gurgaon-122002, Haryana, India

SCALE:- NTS

TITLE:- TYPICAL LAYOUT OF TRUCK LAY BAY

DRAWING NO.:- AECOM-DELD15159-DD-DWG- MISC-006

REV. R0

AUTHORISED SIGNATORY | DATE | DRAWN | DESIGN | CHECKED BY (Team Leader) | APPROVED BY (Project Director)

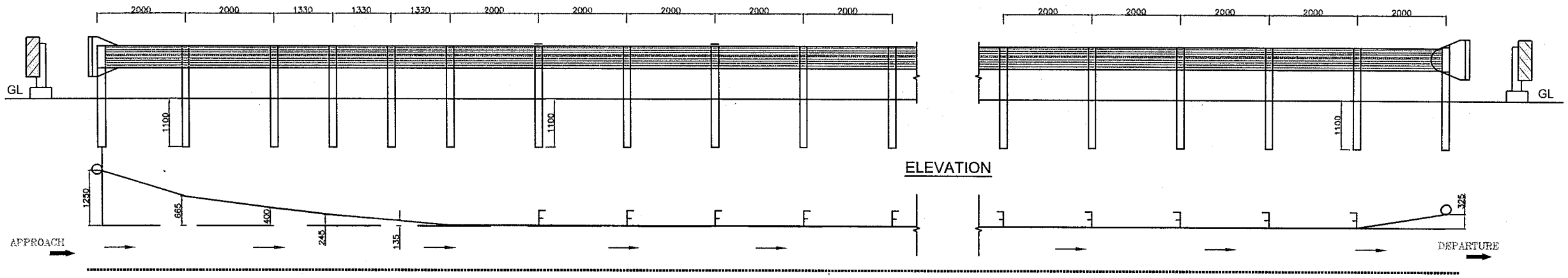

ELEVATION

PLAN

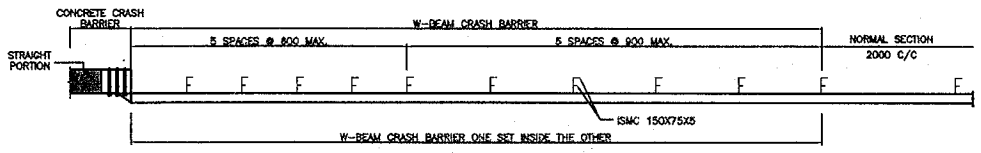

PLAN AT STRUCTURE LOCATION

SCALE 1:50

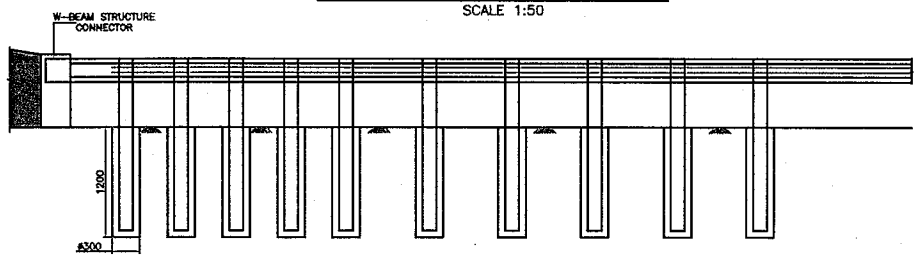

W-BEAM TO RCC CRASH BARRIER

SCALE 1:50

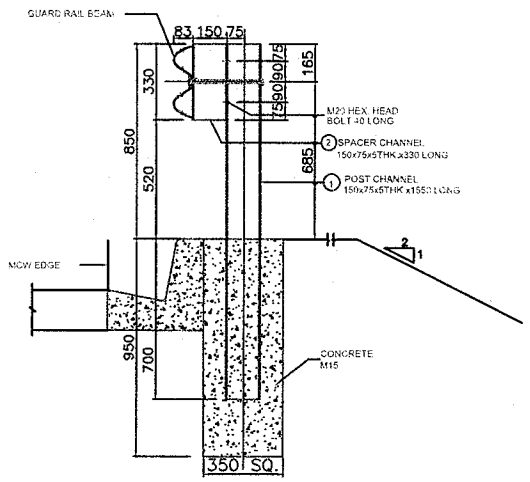

SECTION A-A

SCALE 1:20

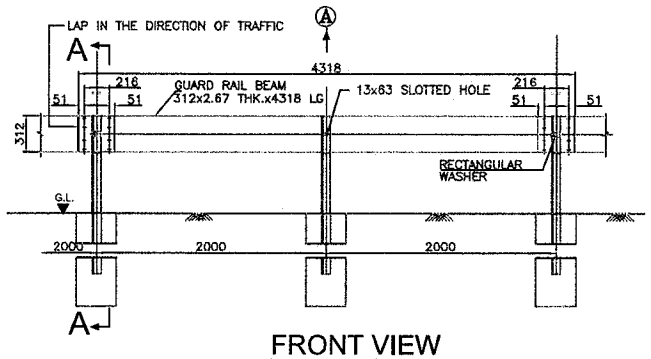

FRONT VIEW

SCALE 1:40

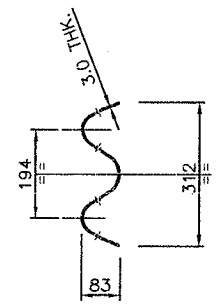

GUARD RAIL BEAM

SCALE 1:10

Acting Team Leader
STUP Consultants Pvt. Ltd.
Nagaon, Assam

Resident Engineer
STUP Consultants Pvt. Ltd.
Nagaon, Assam

NOTES:-

1. ALL DIMENSIONS ARE IN MILLIMETER UNLESS SPECIFIED.
2. THE W-BEAM RAIL SHALL BE 3MM THK.
3. THE W-BEAM SHALL BE COLD ROLL FORMED SECTION.
4. THE W-BEAM, POST SPACERS AND FASTENERS SHALL BE GALVANIZED. BY HOT DIP PROCESS WITH ZIN COSTING OF 550 gm/Sqm.
5. W-BEAM, POST & SPACER SHALL BE CONFORM TO GRADE 255 AS PER IS : 5986-2011 OR GRADE E250, QUALITY-A AS PER IS 2062-2011.
6. FASTENERS SHALL BE CONFORM TO IS 1367 & IS 1364.
7. IN FOOTING M15 GRADE SHALL BE PROVIDED OF SIZE ø300X300MM.
8. THE END OF FASTENERS ARE TO BE FLARED BY PNEUMATIC OPERATION TO ENSURE THAT THE BOLTS ARE NOT REMOVABLE.
9. METAL BEAM CRASH BARRIER SHALL BE PLACED SUCH THAT IT DOES NOT CONFLICT UTILITIES.
10. PROPOSED CHAINAGES FOR CRASH BARRIER LOCATIONS SHALL BE VERIFIED AT SITE (EMBANKMENT HEIGHT >3M) AND CRASH BARRIER LENGTH SHALL BE AS PER THE ACTUAL SITE REQUIREMENTS.

Rev.	Date	Description on Revision
R0	Aug. 2021	First submission

Revisions

CLIENT:- NATIONAL HIGHWAYS & INFRASTRUCTURE DEVELOPMENT CORPORATION LTD.

AUTHORITY'S ENGINEER: STUP Consultants P. Ltd & Ayoleeza Consultants P. Ltd.

PROJECT CHECKING CONSULTANT: C.E. TESTING CO. PVT. LTD.

SAFETY CONSULTANT:- Chaitanya Projects Consultancy Pvt. Ltd

AUTHORISED SIGNATORY | DATE | AUTHORISED SIGNATORY | DATE | AUTHORISED SIGNATORY | DATE

PROJECT: FOUR LANING OF NH-37 FROM RANGAGARA TO KALIABOR TINIALI (CH: 297.000 KM TO CH: 315.315 KM) IN NAGAON DISTRICT IN THE STATE OF ASSAM UNDER SARDP-NE, PHASE A ON EPC MODE

EPC CONTRACTOR:- SIMPLEX INFRASTRUCTURES LIMITED, 27, SHAKESPEARE SARANI, KOLKATA-17, INDIA

CONSULTANTS:- AECOM, 9th Floor, Infinity Tower C DLF Cyber City, DLF Phase II, Gurgaon-122002, Haryana, India

DRAWN | DESIGN | CHECKED BY (SL Team Leader) | APPROVED BY (MSR Design Director)

SCALE:- NTS

TITLE:- DETAILS OF W-BEAM CRASH BARRIER

DRAWING NO.:- AECOM-DELD15159-DD-DWG- MISC-007

REV. R0

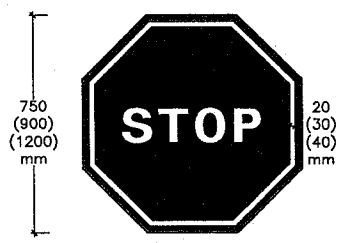

S-1 STOP SIGN
SCALE–1:20

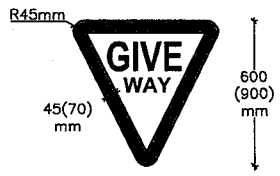

S-2 GIVE WAY
SCALE–1:20

NOTE:
600MM SIZE FOR DESIGN SPEED UPTO 65 KMPH
AND 900MM SIZE FOR DESIGN SPEED 81–100 KMPH

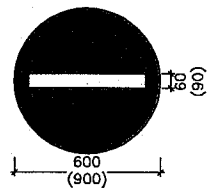

S-3 NO ENTRY
SCALE–1:20

NOTE:
600MM SIZE FOR DESIGN SPEED UPTO 65 KMPH
AND 900MM SIZE FOR DESIGN SPEED 81–100 KMPH

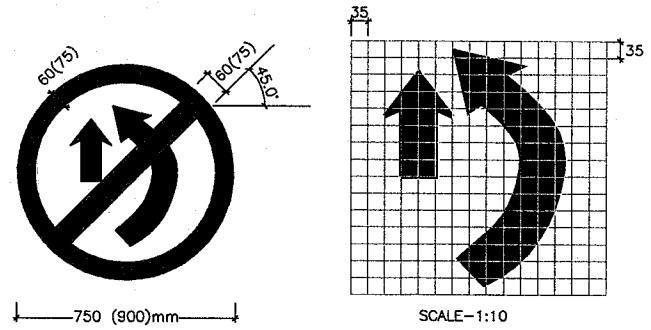

SCALE–1:10

S-4 OVERTAKING PROHIBITED
SCALE–1:20

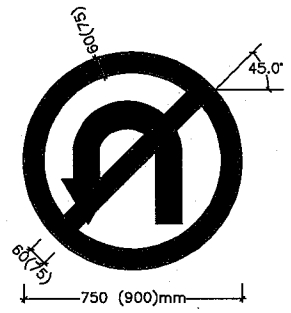

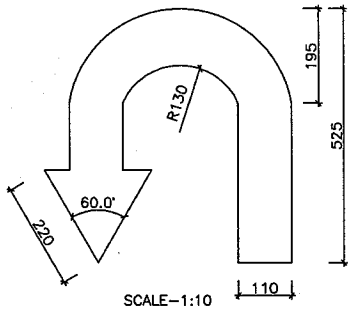

SCALE–1:10

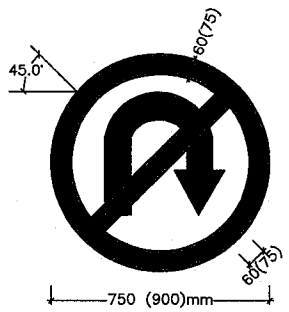

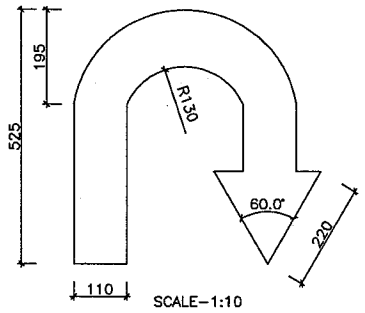

SCALE–1:10

S-5 U - TURN PROHIBITED
SCALE 1:20

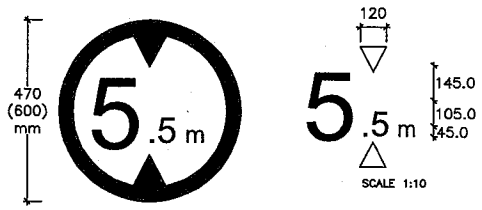

S-6 HEIGHT LIMIT
SCALE 1:20

Resident Engineer
STUP Consultants Pvt. Ltd.
Nagaon, Assam

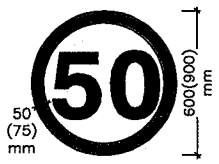

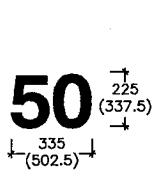

S-7 MAXIMUM SPEED LIMIT
SCALE 1:20

NOTE:
600MM SIZE FOR DESIGN SPEED UPTO 65 KMPH
AND 900MM SIZE FOR DESIGN SPEED 81–100 KMPH

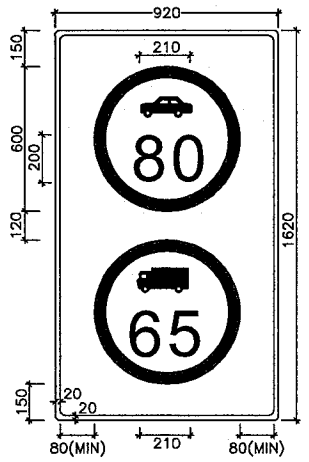

S-8 MAX SPEED LIMIT SIGN
SCALE 1:20

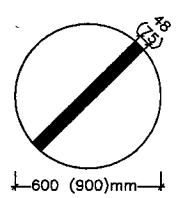

S-9 RESTRICTION ENDS
SCALE 1:20

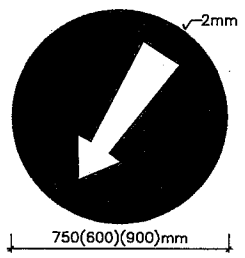

S-12 COMPULSORY KEEP LEFT
SCALE 1:20

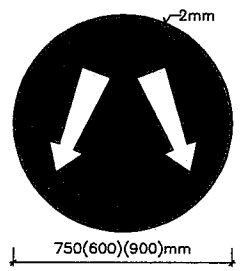

S-13 PASS EITHER SIDE
SCALE–1:20

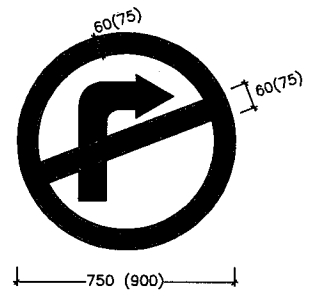

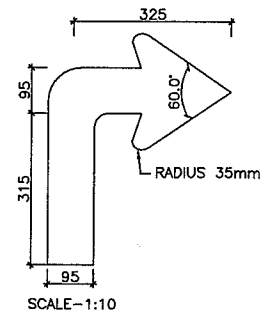

SCALE–1:10

S-94 RIGHT TURN PROHIBITED
SCALE–1:20

NOTES:–

1. ALL DIMENSIONS ARE IN MILLIMETER UNLESS OTHERWISE SPECIFIED.
2. MATERIAL AND COLOR FOR ROAD SIGN SHALL TO CONFORM TO IRC : 67–2012 AND SECTION 800 MORTH OF SPECIFICATIONS.
3. SIZE OF SIGN BOARDS, ARROWS, LETTERS AND NUMERALS FOR ROAD SIGNS SHALL BE AS PER IRC : 67–2012.
4. GRAPHICS AND MASSAGES SHOWN ON SIGNS ARE INDICATIVE ONLY.

Acting Team Leader
STUP Consultants Pvt. Ltd.
Nagaon, Assam

CHAITANYA PROJECTS CONSULTANCY PVT. LTD.

Rev.	Date	Description on Revision
R0	Aug. 2021	First submission

Revisions

CLIENT:-	AUTHORITY'S ENGINEER:	PROOF CHECKED BY:	SAEFTY CONSULTANT:-	PROJECT:	EPC CONTRACTOR:-	CONSULTANT:-	SCALE:-	TITLE:-
NATIONAL HIGHWAYS & INFRASTRUCTURE DEVELOPMENT CORPORATION LTD.	STUP Consultants P. Ltd & Ayoleeza Consultants P. Ltd.	C.E. TESTING CO. PVT. LTD.	Chaitanya Projects Consultancy Pvt. Ltd	FOUR LANING OF NH-37 FROM RANGAGARA TO KALIABOR TINIALI (CH: 297.000 KM TO CH: 315.315 KM) IN NAGAON DISTRICT IN THE STATE OF ASSAM UNDER SARDP-NE, PHASE A ON EPC MODE	SIMPLEX INFRASTRUCTURES LIMITED 27, SHAKESPEARE SARANI, KOLKATA-17, INDIA	AECOM 9th Floor, Infinity Tower C DLF Cyber City DLF Phase II, Gurgaon-122002, Haryana, India	NTS	TYPICAL DETAILS OF TRAFFIC SIGNS
	AUTHORISED SIGNATORY / DATE	AUTHORISED SIGNATORY / DATE	AUTHORISED SIGNATORY / DATE			DRAWN / DESIGN / CHECKED BY (SL, Team Leader) / APPROVED BY (MSR, Design Director)		DRAWING NO.:- AECOM-DELD15159-DD-DWG- MISC-008 (1-OF 4) / REV. R0

AECOM India Private Limited Gurgaon

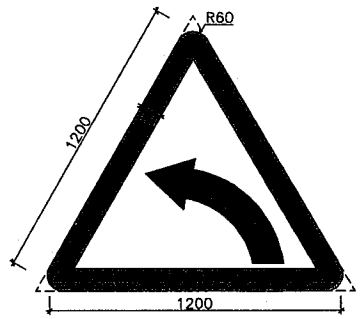

S-14 LEFT HAND CURVE
SCALE–1:20

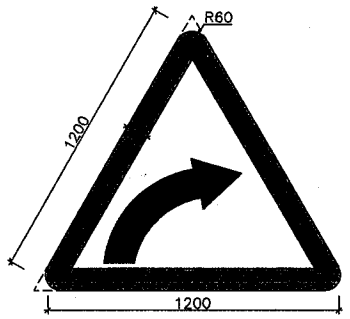

S-15 RIGHT HAND CURVE
SCALE–1:20

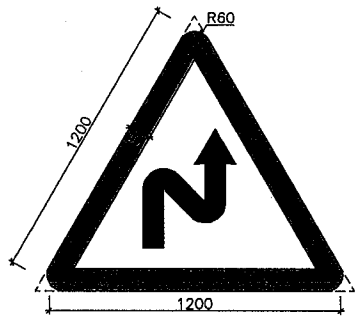

S-18 RIGHT REVERSE BEND
SCALE 1:20

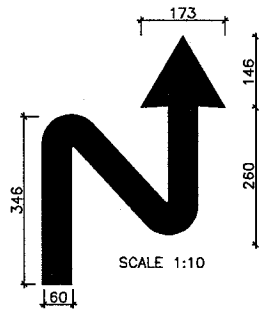

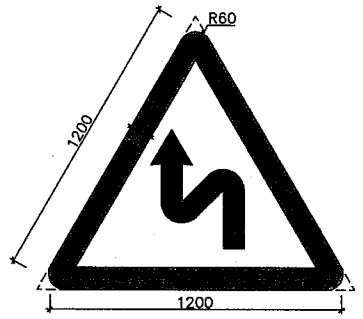

S-19 LEFT REVERSE BEND
SCALE 1:20

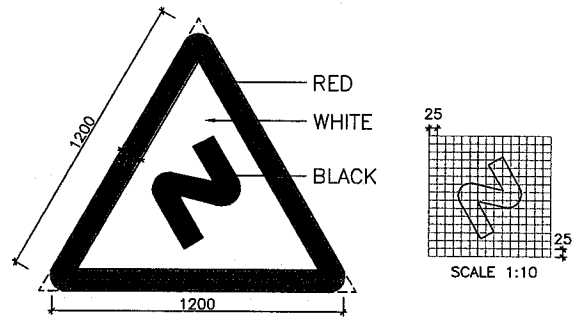

S-20 SERIES OF BENDS
SCALE 1:20

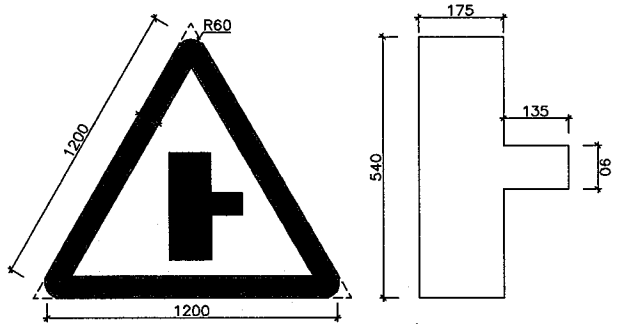

S-21 SIDE ROAD RIGHT
SCALE 1:20

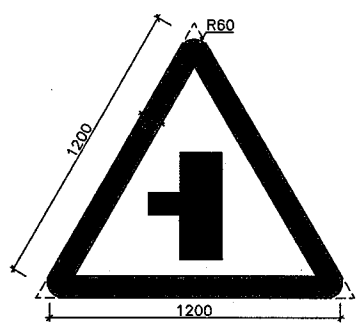

S-22 SIDE ROAD LEFT
SCALE 1:20

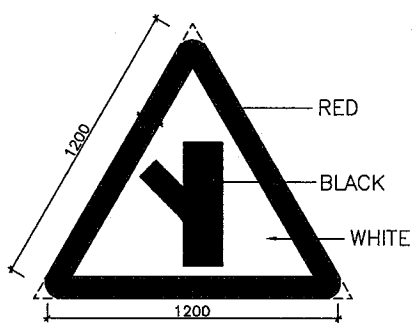

S-23 'Y' INTERSECTION (LEFT)
SCALE 1:20

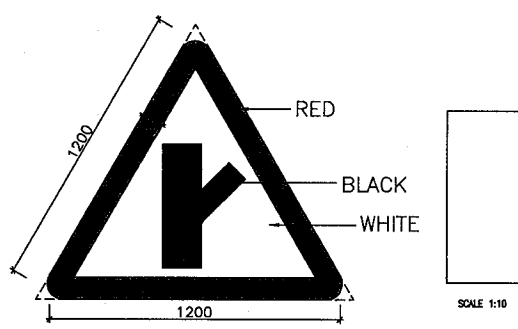

S-23 'Y' INTERSECTION (RIGHT)
SCALE 1:20

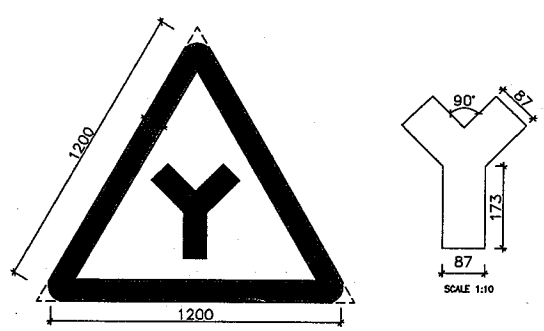

S-23 'Y' INTERSECTIONS
SCALE 1:20

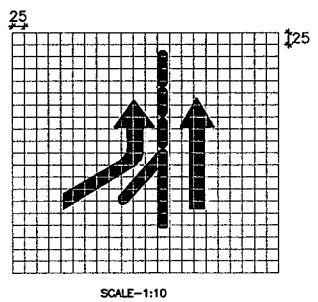

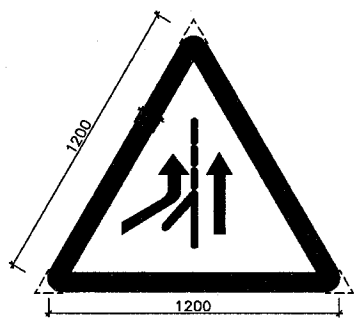

S-30 MERGING TRAFFIC AHEAD (FROM LEFT)
SCALE–1:20

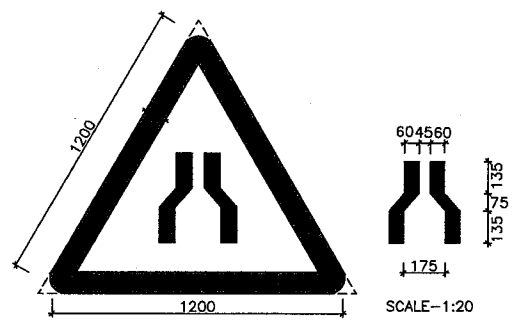

S-32 NARROW ROAD AHEAD
SCALE–1:20

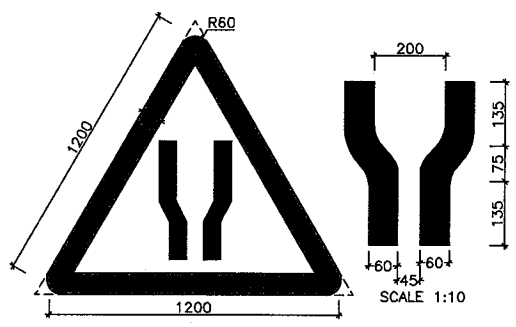

S-33 ROAD WIDENS AHEAD
SCALE 1:20

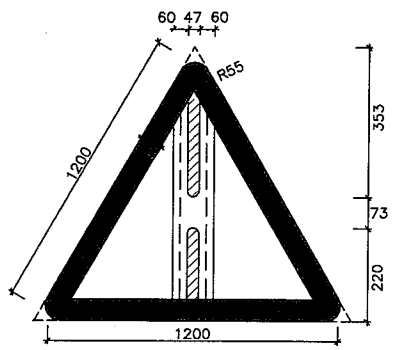

S-37 GAP IN MEDIAN
SCALE 1:20

Resident Engineer
STUP Consultants Pvt. Ltd.
Nagaon, Assam

Acting Team Leader
STUP Consultants Pvt. Ltd.
Nagaon, Assam

CHAITANYA PROJECTS CONSULTANCY PVT. LTD.

NOTES:–

1. ALL DIMENSIONS ARE IN MILLIMETER UNLESS OTHERWISE SPECIFIED.
2. MATERIAL AND COLOR FOR ROAD SIGN SHALL TO CONFORM TO IRC : 67–2012 AND SECTION 800 MORTH OF SPECIFICATIONS.
3. SIZE OF SIGN BOARDS, ARROWS, LETTERS AND NUMERALS FOR ROAD SIGNS SHALL BE AS PER IRC : 67–2012.
4. GRAPHICS AND MASSAGES SHOWN ON SIGNS ARE INDICATIVE ONLY.

Rev.	Date	Description on Revision
R0	Aug. 2021	First submission

Revisions

CLIENT:- NATIONAL HIGHWAYS & INFRASTRUCTURE DEVELOPMENT CORPORATION LTD.

AUTHORITY'S ENGINEER: STUP Consultants P. Ltd & Ayoleeza Consultants P. Ltd.

PROJ. CHECKED BY: C.E. TESTING CO. PVT. LTD.

SAEFTY CONSULTANT:- Chaitanya Projects Consultancy Pvt. Ltd

AUTHORISED SIGNATORY | DATE | AUTHORISED SIGNATORY | DATE | AUTHORISED SIGNATORY | DATE

PROJECT: FOUR LANING OF NH-37 FROM RANGAGARA TO KALIABOR TINIALI (CH: 297.000 KM TO CH: 315.315 KM) IN NAGAON DISTRICT IN THE STATE OF ASSAM UNDER SARDP-NE, PHASE A ON EPC MODE

EPC CONTRACTOR:- SIMPLEX INFRASTRUCTURES LIMITED, 27, SHAKESPEARE SARANI, KOLKATA-17, INDIA

CONSULTANTS:- AECOM, 9th Floor, Infinity Tower C DLF Cyber City, DLF Phase II, Gurgaon-122002, Haryana, India

DRAWN | DESIGN | CHECKED BY (Team Leader) | APPROVED BY (Design Director)

SCALE:- NTS

TITLE:- TYPICAL DETAILS OF TRAFFIC SIGNS

DRAWING NO.:- AECOM-DELD15159-DD-DWG- MISC-008 | REV. R0

AECOM India Private Limited Gurgaon

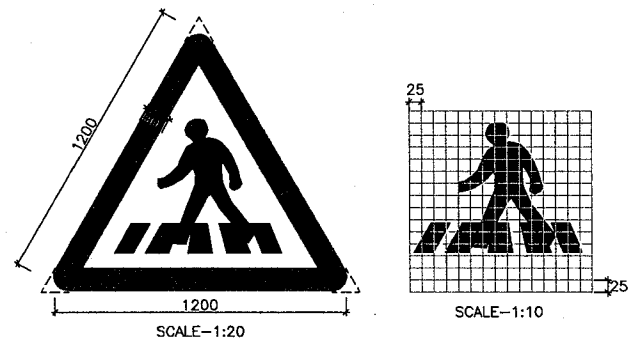

S-38 PEDESTRIAN CROSSING
SCALE 1:20

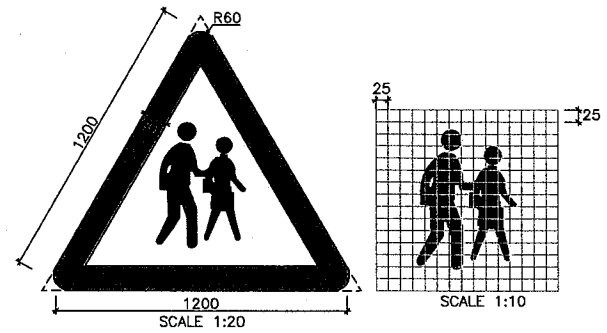

S-39 SCHOOL AHEAD
SCALE 1:20

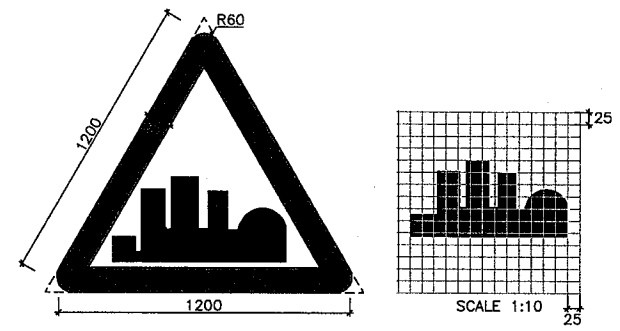

S-40 BUILT-UP AREA
SCALE 1:20

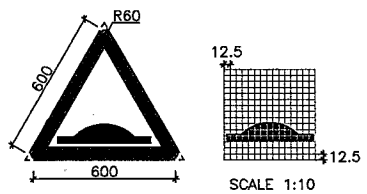

S-41 SPEEDBREAKER
SCALE 1:20

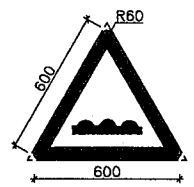

S-42 RUMBLE STRIP
SCALE 1:20

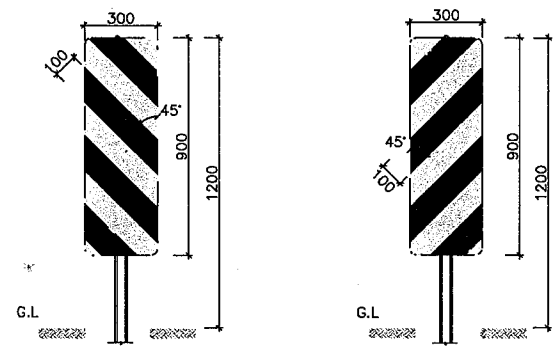

LEFT RIGHT

S-49 & S-50 OBJECT HAZARD MARKERS
SCALE 1:20

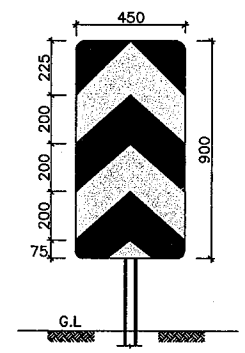

S-51 TWO WAY HAZARD MARKERS
SCALE 1:20

Resident Engineer
STUP Consultants Pvt. Ltd.
Nagaon, Assam

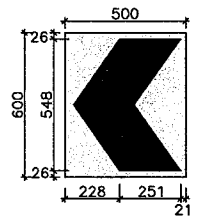

S-45 SINGLE CHEVRON (NORMAL)
SCALE 1:20

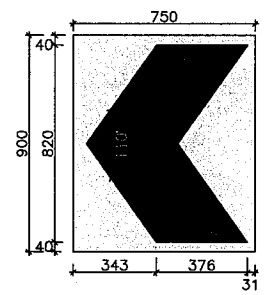

S-46 SINGLE CHEVRON (>100kmph SPEED)
SCALE 1:20

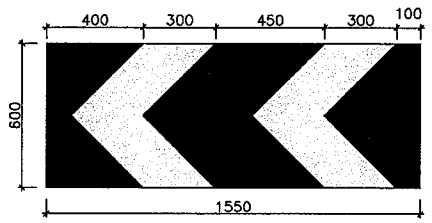

S-47 DOUBLE CHEVRON
SCALE 1:20

SPACING OF SINGLE CHEVRON SIGNS

Curve Radius(m)	Distance between single chevron (m)	
	On Curve	Before Curve
50	15	30
100	20	40
200	30	60
300	45	90
400	60	120
500	70	140
>500	80	150

Acting Team Leader
STUP Consultants Pvt. Ltd.
Nagaon, Assam

CHAITANYA PROJECTS CONSULTANCY PVT. LTD.

NOTES:–

1. ALL DIMENSIONS ARE IN MILLIMETER UNLESS OTHERWISE SPECIFIED.
2. MATERIAL AND COLOR FOR ROAD SIGN SHALL TO CONFORM TO IRC : 67–2012 AND SECTION 800 MORTH OF SPECIFICATIONS.
3. SIZE OF SIGN BOARDS, ARROWS, LETTERS AND NUMERALS FOR ROAD SIGNS SHALL BE AS PER IRC : 67–2012.
4. GRAPHICS AND MASSAGES SHOWN ON SIGNS ARE INDICATIVE ONLY.

C.E. TESTING CO. PVT. LTD. KOLKATA

Rev.	Date	Description on Revision
R0	Aug. 2021	First submission

Revisions

CLIENT:- NATIONAL HIGHWAYS & INFRASTRUCTURE DEVELOPMENT CORPORATION LTD.

AUTHORITY'S ENGINEER: STUP Consultants P. Ltd & Ayoleeza Consultants P. Ltd.

PROJECT CONSULTANT: C.E. TESTING CO. PVT. LTD.

SAEFTY CONSULTANT:- Chaitanya Projects Consultancy Pvt. Ltd

AUTHORISED SIGNATORY | DATE | AUTHORISED SIGNATORY | DATE | AUTHORISED SIGNATORY | DATE

PROJECT: FOUR LANING OF NH-37 FROM RANGAGARA TO KALIABOR TINIALI (CH: 297.000 KM TO CH: 315.315 KM) IN NAGAON DISTRICT IN THE STATE OF ASSAM UNDER SARDP-NE, PHASE A ON EPC MODE

EPC CONTRACTOR:- SIMPLEX INFRASTRUCTURES LIMITED, 27, SHAKESPEARE SARANI, KOLKATA-17, INDIA

CONSULTANTS:- AECOM, 9th Floor, Infinity Tower C DLF Cyber City, DLF Phase II, Gurgaon-122002, Haryana, India

DRAWN | DESIGN | CHECKED BY (SL, Team Leader) | APPROVED BY (MSR, Design Director)

SCALE:- NTS

TITLE:- TYPICAL DETAILS OF TRAFFIC SIGNS

DRAWING NO.:- AECOM-DELD15159-DD-DWG- MISC-008 (3 OF 4) REV. R0

AECOM India Private Limited Gurgaon

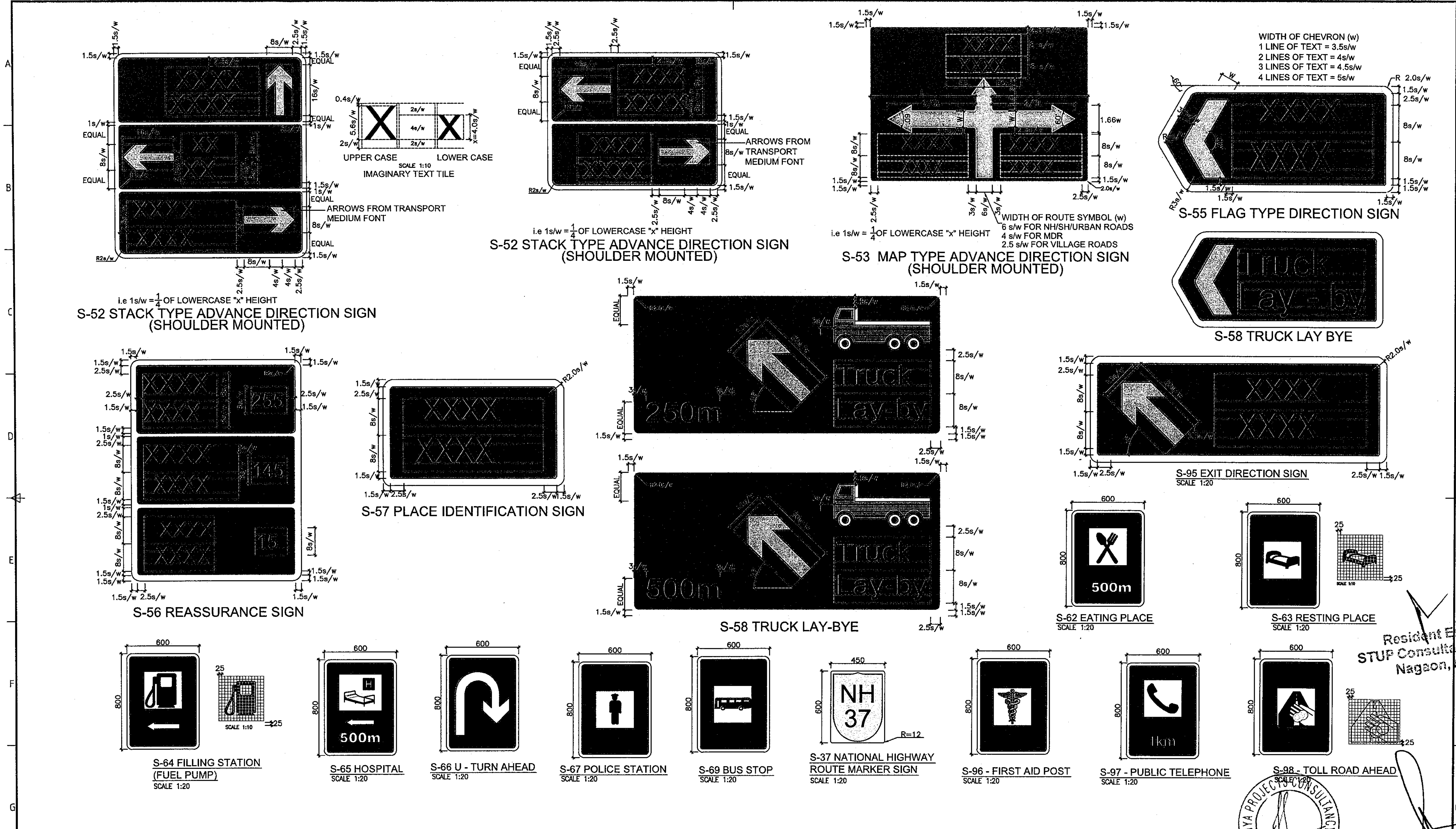

Resident Engineer
STUP Consultants Pvt. Ltd.
Nagaon, Assam

Acting Team Leader
STUP Consultants Pvt. Ltd.
Nagaon, Assam

NOTES:-

1. ALL DIMENSIONS ARE IN MILLIMETER UNLESS OTHERWISE SPECIFIED.
2. MATERIAL AND COLOR FOR ROAD SIGN SHALL TO CONFORM TO IRC : 67-2012 AND SECTION 800 MORTH OF SPECIFICATIONS.
3. SIZE OF SIGN BOARDS, ARROWS, LETTERS AND NUMERALS FOR ROAD SIGNS SHALL BE AS PER IRC : 67-2012.
4. OBJECT MARKER SIGN SHALL CONFIRM TO IRC 79-1981.

Rev.	Date	Description on Revision
R0	Aug. 2021	First submission

CLIENT:- NATIONAL HIGHWAYS & INFRASTRUCTURE DEVELOPMENT CORPORATION LTD.

AUTHORITY'S ENGINEER: STUP Consultants P. Ltd & Ayoleeza Consultants P. Ltd. — AUTHORISED SIGNATORY / DATE

PROOF CHECKING CONSULTANT: — AUTHORISED SIGNATORY / DATE

SAEFTY CONSULTANT:- Chaitanya Projects Consultancy Pvt. Ltd — AUTHORISED SIGNATORY / DATE

PROJECT: FOUR LANING OF NH-37 FROM RANGAGARA TO KALIABOR TINIALI (CH: 297.000 KM TO CH: 315.315 KM) IN NAGAON DISTRICT IN THE STATE OF ASSAM UNDER SARDP-NE, PHASE A ON EPC MODE

EPC CONTRACTOR:- SIMPLEX INFRASTRUCTURES LIMITED, 27, SHAKESPEARE SARANI, KOLKATA-17, INDIA

CONSULTANTS:- AECOM, 9th Floor, Infinity Tower C DLF Cyber City, DLF Phase II, Gurgaon-122002, Haryana, India

DRAWN | DESIGN | CHECKED BY (SL, Team Leader) | APPROVED BY (MSR, Design Director)

SCALE:- NTS

TITLE:- TYPICAL DETAILS OF TRAFFIC SIGNS

DRAWING NO.:- AECOM-DELD15159-DD-DWG- MISC-008 (4 OF 4) R0

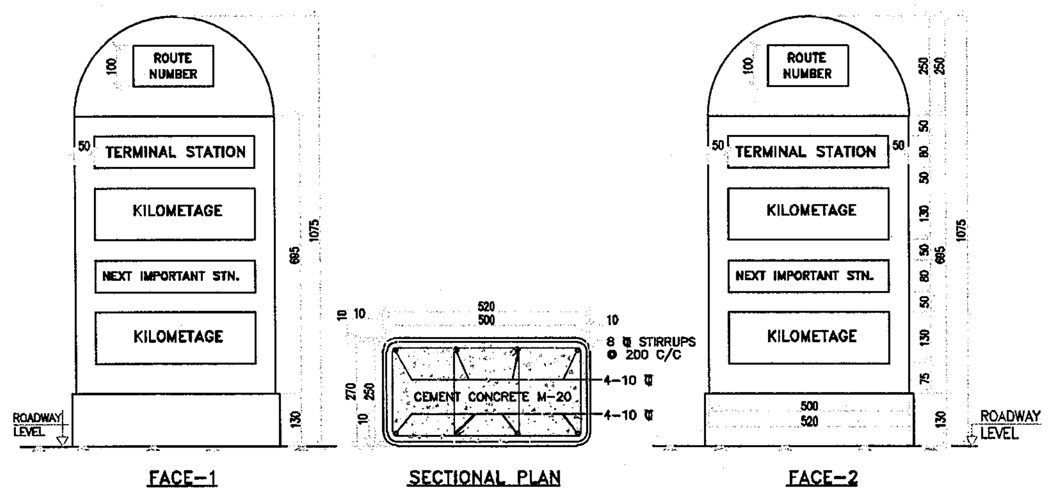

TYPE DESIGN 5th KILOMETRE STONE

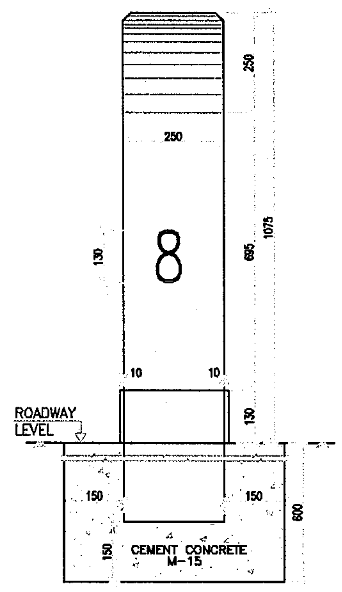

SIDE ELEVATION

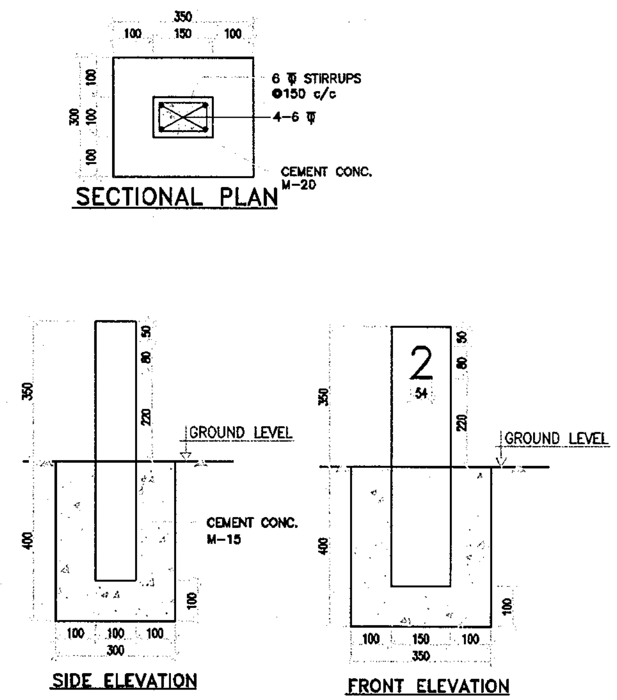

DETAILS OF 200 METRE STONE

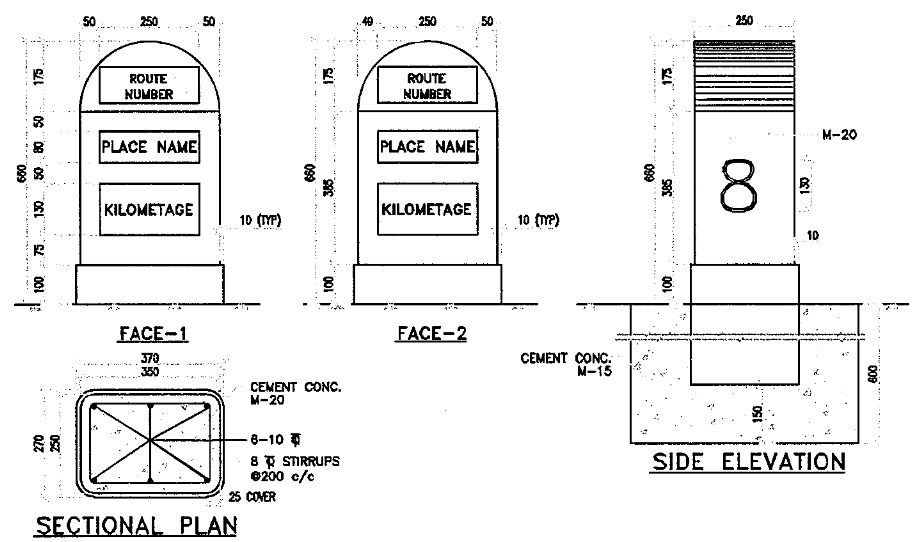

TYPE DESIGN OF KILOMETRE STONE

NOTES FOR KM AND GUARD STONE:

1. ALL DIMENSIONS ARE IN MILLIMETERS UNLESS OTHERWISE SPECIFIED.
2. ALL NUMERALS & LETTERS SHALL BE PRINTED IN BLACK.
3. SIZE OF LETTERS AND NUMERALS SHALL BE AS PER IRC 8:1980 & AS PER CIRCULAR NO. RW/NH 33044/27/2004-S&R(R) DATED 24.12.2004.
4. KILOMETER STONE AND FIFTH KILOMETER STONE SHALL BE PAINTED AS SHOWN IN THE DRAWING AND SHALL BE PLACED BASED ON SITE CONDITION.
5. THE KILOMETER STONE MAY BE PLACED IN MEDIAN BASED ON SITE CONDITION.
6. KILOMETER STONE SHALL BE FIXED AT RIGHT ANGLES TO THE CENTRE LINE OF THE CARRIAGEWAY ON BOTH SIDES OF THE ROAD INDEPENDENTLY FOR EACH DIRECTION OF TRAVEL.
7. ON EMBANKMENTS, KILOMETER STONE SHALL BE LOCATED ON THE EDGE OF THE ROADWAY BEYOND THE SHOULDERS, IF NECESSARY ON SPECIALLY ERECTED PLANTFORMS.
8. IN CUT SECTIONS, KILOMETER STONE SHALL BE FIXED CLEAR OF THE SHOULDER AS WELL AS THE SIDE DRAINS.

Acting Team Leader
STUP Consultants Pvt. Ltd.
Nagaon, Assam

Resident Engineer
STUP Consultants Pvt. Ltd.
Nagaon, Assam

RO	Aug. 2021	First submission
Rev.	Date	Description on Revision
		Revisions

CLIENT: NATIONAL HIGHWAYS & INFRASTRUCTURE DEVELOPMENT CORPORATION LTD.

AUTHORITY'S ENGINEER: STUP Consultants P. Ltd & Ayoleeza Consultants P. Ltd. — AUTHORISED SIGNATORY / DATE

PROOF CONSULTANT: ... Consultancy Pvt. Ltd — AUTHORISED SIGNATORY / DATE

SAFETY CONSULTANT: Chaitanya Projects Consultancy Pvt. Ltd — AUTHORISED SIGNATORY / DATE

PROJECT: FOUR LANING OF NH-37 FROM RANGAGARA TO KALIABOR TINIALI (CH: 297.000 KM TO CH: 315.315 KM) IN NAGAON DISTRICT IN THE STATE OF ASSAM UNDER SARDP-NE, PHASE A ON EPC MODE

EPC CONTRACTOR: SIMPLEX INFRASTRUCTURES LIMITED, 27, SHAKESPEARE SARANI, KOLKATA-17, INDIA

CONSULTANTS: AECOM, 9th Floor, Infinity Tower C DLF Cyber City DLF Phase II, Gurgaon-122002, Haryana, India

DRAWN | DESIGN | CHECKED BY | APPROVED BY

SCALE: NTS

TITLE: DETAILS OF KILOMETER STONE & GUARD POSTS

DRAWING NO.: AECOM-DEL15159-DD-DWG-MISC-034 (1 OF 2)

REV: R0

C.E. TESTING CO. PVT. LTD. KOLKATA

AECOM India Private Limited Gurgaon

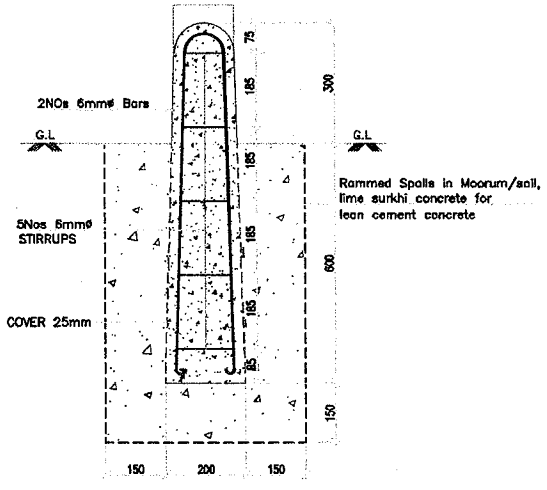

SECTION A–A

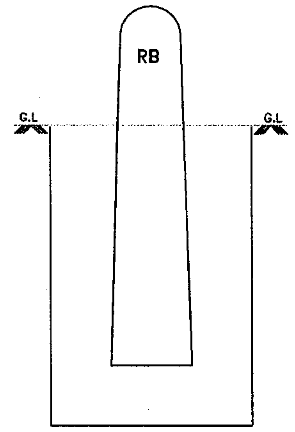

ELEVATION

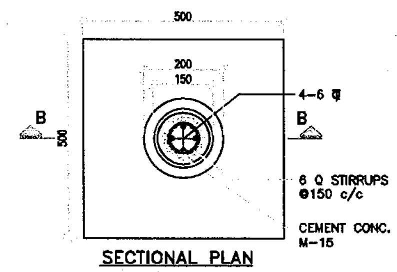

SECTIONAL PLAN

TYPE DESIGN BOUNDRY STONE

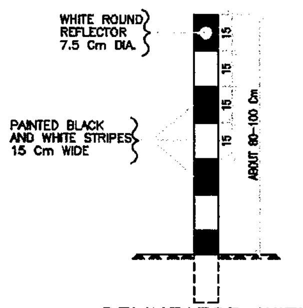

DELINEATOR WITH CIRCULAR REFLECTOR

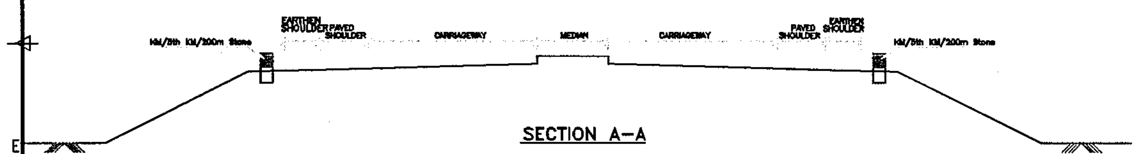

SECTION A–A

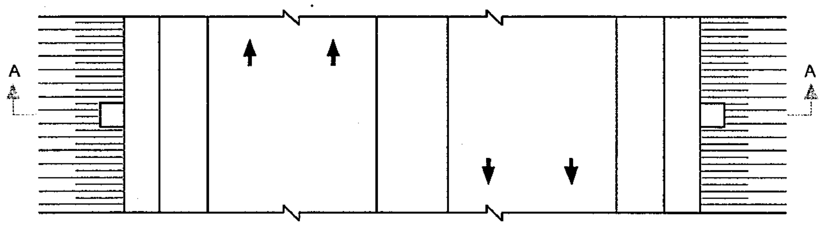

PLAN

TYPICAL LOCATION OF KILOMETRE/5th KILOMETRE & 200 METRE STONE

Acting Team Leader
STUP Consultants Pvt. Ltd.
Nagaon, Assam

Resident Engineer
STUP Consultants Pvt. Ltd.
Nagaon, Assam

NOTES FOR KM AND GUARDSTONE:

1. ALL DIMENSIONS ARE IN MILLIMETERS UNLESS OTHERWISE SPECIFIED.
2. ALL NUMERALS & LETTERS SHALL BE PRINTED IN BLACK.
3. SIZE OF LETTERS AND NUMERALS SHALL BE AS PER IRC 8:1980 & AS PER CIRCULAR NO. RW/NH 33044/27/2004–S&R(R) DATED 24.12.2004.
4. KILOMETER STONE AND FIFTH KILOMETER STONE SHALL BE PAINTED AS SHOWN IN THE DRAWING AND SHALL BE PLACED BASED ON SITE CONDITION.
5. THE KILOMETER STONE MAY BE PLACED IN MEDIAN BASED ON SITE CONDITION.
6. KILOMETER STONE SHALL BE FIXED AT RIGHT ANGLES TO THE CENTRE LINE OF THE CARRIAGEWAY ON BOTH SIDES OF THE ROAD INDEPENDENTLY FOR EACH DIRECTION OF TRAVEL.
7. ON EMBANKMENTS, KILOMETER STONE SHALL BE LOCATED ON THE EDGE OF THE ROADWAY BEYOND THE SHOULDERS, IF NECESSARY ON SPECIALLY ERECTED PLANTFORMS.
8. IN CUT SECTIONS, KILOMETER STONE SHALL BE FIXED CLEAR OF THE SHOULDER AS WELL AS THE SIDE DRAINS.

Rev.	Date	Description on Revision
R0	Aug. 2021	First submission

Revisions

CLIENT:-	AUTHORITY'S ENGINEER:	PROOF CHECKING CONSULTANT:	SAFETY CONSULTANT:-	PROJECT:	EPC CONTRACTOR:-	CONSULTANTS:-	SCALE:-	TITLE:-
NATIONAL HIGHWAYS & INFRASTRUCTURE DEVELOPMENT CORPORATION LTD.	STUP Consultants P. Ltd & Ayoleeza Consultants P. Ltd.	C.E. TESTING Co. Pvt. Ltd	Chaitanya Projects Consultancy Pvt. Ltd	FOUR LANING OF NH-37 FROM RANGAGARA TO KALIABOR TINIALI (CH: 297.000 KM TO CH: 315.315 KM) IN NAGAON DISTRICT IN THE STATE OF ASSAM UNDER SARDP-NE, PHASE A ON EPC MODE	SIMPLEX INFRASTRUCTURES LIMITED 27, SHAKESPEARE SARANI, KOLKATA-17, INDIA	AECOM 9th Floor, Infinity Tower C DLF Cyber City DLF Phase II, Gurgaon-122002, Haryana, India	NTS	DETAILS OF KILOMETER STONE & GUARD POSTS
	AUTHORISED SIGNATORY / DATE	AUTHORISED SIGNATORY / DATE	AUTHORISED SIGNATORY / DATE			DRAWN / DESIGN / CHECKED BY / APPROVED BY		DRAWING NO.:- AECOM-DELD15159-DD-DWG-MISC-034 (2 OF 2) REV. R0

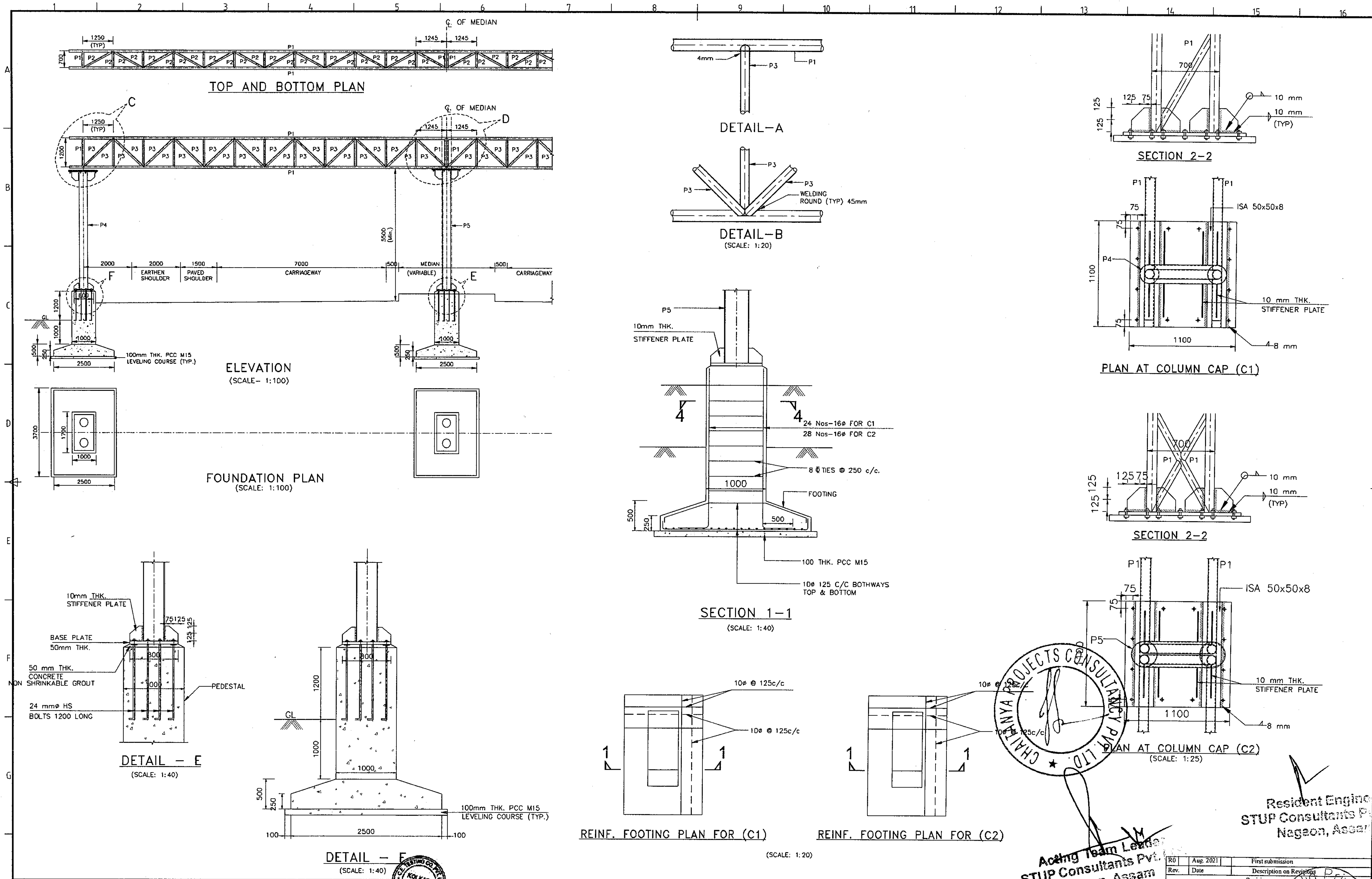

Resident Engineer
STUP Consultants P.
Nagaon, Assam

Acting Team Leader
STUP Consultants Pvt.
Nagaon, Assam

Rev.	Date	Description on Revisions
R0	Aug. 2021	First submission

CLIENT:- NATIONAL HIGHWAYS & INFRASTRUCTURE DEVELOPMENT CORPORATION LTD.

AUTHORITY'S ENGINEER: STUP Consultants P. Ltd & Ayoleeza Consultants P. Ltd.

PROOF CHECKER: CETEST TESTING Company Pvt. Ltd

SAFETY CONSULTANT:- Chaitanya Projects Consultancy Pvt. Ltd

PROJECT: FOUR LANING OF NH-37 FROM RANGAGARA TO KALIABOR TINIALI (CH: 297.000 KM TO CH: 315.315 KM) IN NAGAON DISTRICT IN THE STATE OF ASSAM UNDER SARDP-NE, PHASE A ON EPC MODE

EPC CONTRACTOR:- SIMPLEX INFRASTRUCTURES LIMITED, 27, SHAKESPEARE SARANI, KOLKATA-17, INDIA

CONSULTANTS:- AECOM, 9th Floor, Infinity Tower C DLF Cyber City DLF Phase II, Gurgaon-122002, Haryana, India

SCALE:- NTS

TITLE:- TYPICAL DETAILING OF GANTRY FOR OVER HEAD SIGNS

DRAWING NO.:- AECOM-DELD15159-DD-DWG- MISC-055A

REV. R0

DRAWN	DESIGN	CHECKED BY	APPROVED BY
		SL (Team Leader)	MSR (Design Director)

AUTHORISED SIGNATORY | DATE

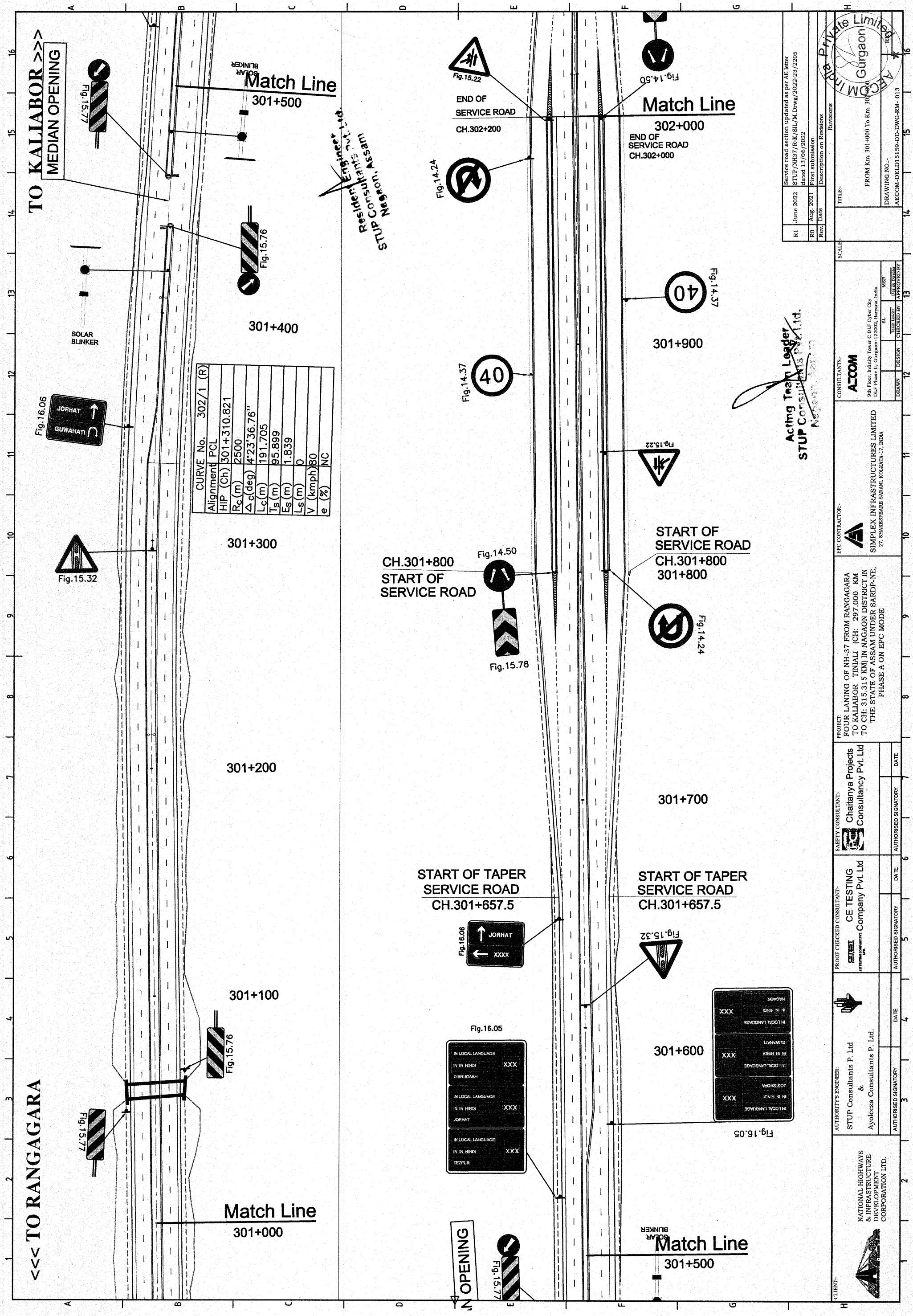

CURVE No.	302/1 (R)
Alignment	PCL
HIP (Ch)	301+310.821
R_c (m)	2500
Δ_c (deg)	4°23'36.76"
L_c (m)	191.705
T_s (m)	95.899
E_s (m)	1.839
L_s (m)	0
V (kmph)	80
e (%)	NC

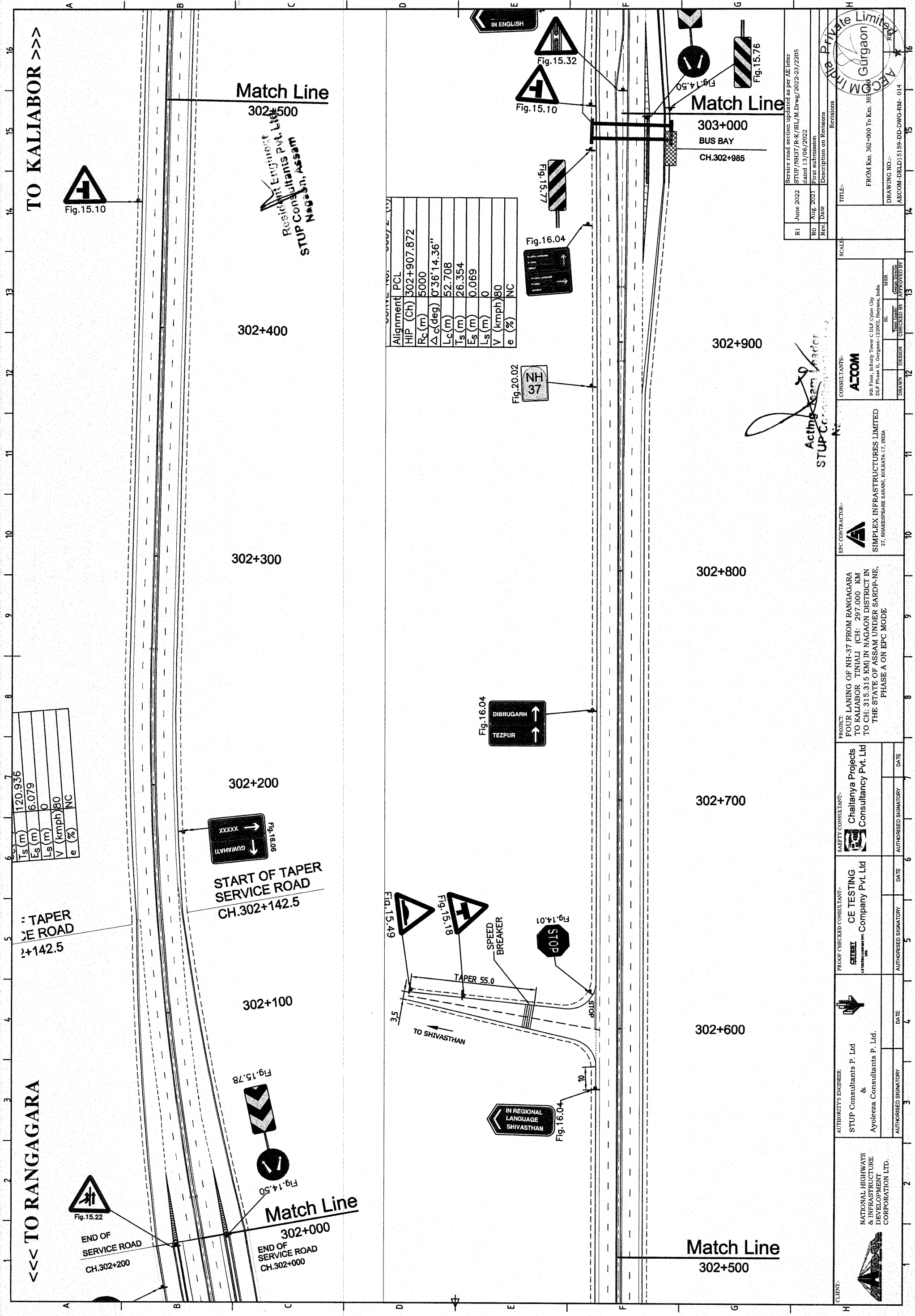
TO KALIABOR >>>
Match Line
302+500
302+400
302+300
302+200
302+100
302+000
302+900
302+800
302+700
302+600
Match Line
302+500
Match Line
302+000
303+000
BUS BAY
CH.302+985
Fig.15.10
Fig.15.32
Fig.14.50
Fig.15.76
Fig.15.77
Fig.16.04
Fig.20.02
NH 37
Fig.16.06
XXXXX
GUWAHATI
START OF TAPER
SERVICE ROAD
CH.302+142.5
Fig.16.04
DIBRUGARH
TEZPUR
Fig.15.49
Fig.15.18
SPEED BREAKER
Fig.14.01
STOP
TAPER 55.0
TO SHIVASTHAN
IN REGIONAL LANGUAGE SHIVASTHAN
Fig.16.04
Fig.15.78
Fig.14.50
Fig.15.22
END OF SERVICE ROAD
CH.302+200
END OF SERVICE ROAD
CH.302+000
<<< TO RANGAGARA
IN ENGLISH
Alignment PCL
HIP (Ch) 302+907.872
Rc (m) 5000
Δc (deg) 0°36'14.36"
Lc (m) 52.708
Ts (m) 26.354
Es (m) 0.069
Ls (m) 0
V (kmph) 80
e (%) NC
Ts (m) 120.936
Es (m) 6.079
Ls (m) 0
V (kmph) 80
e (%) NC
Resident Engineer
STUP Consultants Pvt. Ltd.
Nagaon, Assam
Acting Resident Engineer
STUP Consultants Pvt. Ltd.
AECOM India Private Limited
Gurgaon
R1 June 2022 Service road section updated as per AE letter STUP/NH37/R-K/SIL/M.Drwg/2022-23/2205 dated 13/06/2022
R0 Aug. 2021 First submission
Rev. Date Description on Revisions
Revisions
TITLE:-
FROM Km. 302+000 To Km. 303+000
DRAWING NO.:-
AECOM-DELD1-5159-DD-DWG-RM- 014
SCALE:-
CONSULTANTS:-
AECOM
9th Floor, Infinity Tower C DLF Cyber City
DLF Phase II, Gurgaon-122002, Haryana, India
DRAWN DESIGN CHECKED BY APPROVED BY
Sil. Team Leader MSR Design Director
EPC CONTRACTOR:-
SIMPLEX INFRASTRUCTURES LIMITED
27, SHAKESPEARE SARANI, KOLKATA-17, INDIA
PROJECT:
FOUR LANING OF NH-37 FROM RANGAGARA TO KALIABOR TINIALI (CH: 297.000 KM TO CH: 315.315 KM) IN NAGAON DISTRICT IN THE STATE OF ASSAM UNDER SARDP-NE, PHASE A ON EPC MODE
SAFETY CONSULTANT:-
Chaitanya Projects Consultancy Pvt. Ltd
AUTHORISED SIGNATORY DATE
PROOF CHECKED CONSULTANT:-
CE TESTING Company Pvt. Ltd
AUTHORISED SIGNATORY DATE
AUTHORITY'S ENGINEER:
STUP Consultants P. Ltd
&
Ayoleeza Consultants P. Ltd.
AUTHORISED SIGNATORY DATE
CLIENT:-
NATIONAL HIGHWAYS & INFRASTRUCTURE DEVELOPMENT CORPORATION LTD.

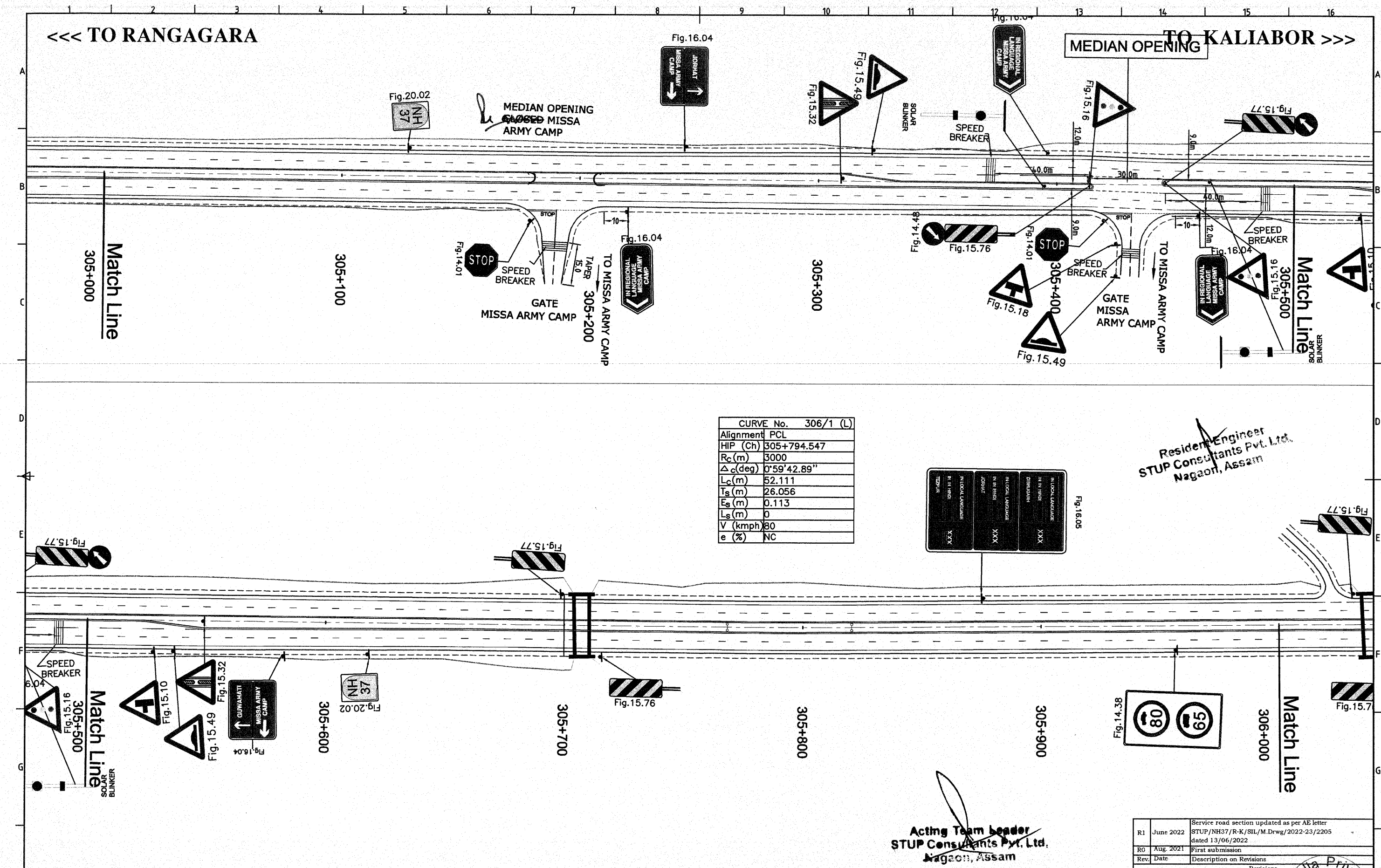

CURVE No.	306/1 (L)
Alignment	PCL
HIP (Ch)	305+794.547
R_C(m)	3000
Δ_C(deg)	0°59'42.89"
L_C(m)	52.111
T_S(m)	26.056
E_S(m)	0.113
L_S(m)	0
V (kmph)	80
e (%)	NC

Resident Engineer
STUP Consultants Pvt. Ltd.
Nagaon, Assam

Acting Team Leader
STUP Consultants Pvt. Ltd.
Nagaon, Assam

Rev.	Date	Description on Revisions
R1	June 2022	Service road section updated as per AE letter STUP/NH37/R-K/SIL/M.Drwg/2022-23/2205 dated 13/06/2022
R0	Aug. 2021	First submission

Revisions

CLIENT:- NATIONAL HIGHWAYS & INFRASTRUCTURE DEVELOPMENT CORPORATION LTD.

AUTHORITY'S ENGINEER: STUP Consultants P. Ltd & Ayoleeza Consultants P. Ltd.

PROOF CHECKED CONSULTANT:- CE TESTING Company Pvt. Ltd

SAEFTY CONSULTANT:- Chaitanya Projects Consultancy Pvt. Ltd

AUTHORISED SIGNATORY | DATE

PROJECT: FOUR LANING OF NH-37 FROM RANGAGARA TO KALIABOR TINIALI (CH: 297.000 KM TO CH: 315.315 KM) IN NAGAON DISTRICT IN THE STATE OF ASSAM UNDER SARDP-NE, PHASE A ON EPC MODE

EPC CONTRACTOR:- SIMPLEX INFRASTRUCTURES LIMITED, 27, SHAKESPEARE SARANI, KOLKATA-17, INDIA

CONSULTANTS:- AECOM, 9th Floor, Infinity Tower C DLF Cyber City, DLF Phase II, Gurgaon-122002, Haryana, India

DRAWN | DESIGN | CHECKED BY (SL Team Leader) | APPROVED BY (MSR Design Director)

SCALE:-

TITLE:- FROM Km. 305+000 To Km. 306+000

DRAWING NO.:- AECOM-DELD15159-DD-DWG-RM- 017

REV.

AECOM India Private Limited Gurgaon

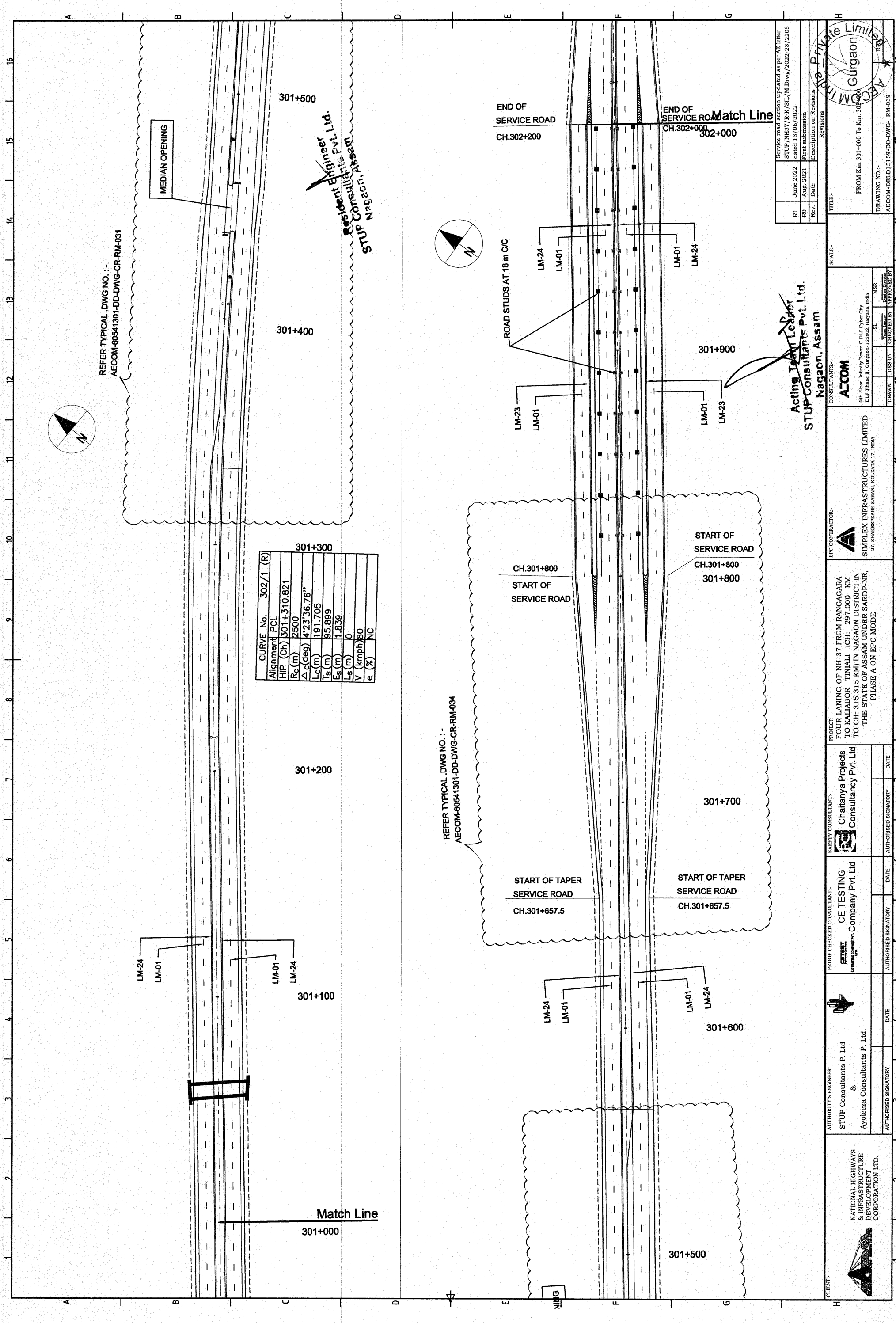
MEDIAN OPENING
REFER TYPICAL .DWG NO. :-
AECOM-60541301-DD-DWG-CR-RM-031
301+500
301+400
301+300
301+200
301+100
Match Line
301+000
CURVE No. 302/1 (R)
Alignment PCL
HIP (Ch) 301+310.821
Rc (m) 2500
Δc(deg) 4°23'36.76"
Lc (m) 191.705
Ts (m) 95.899
Es (m) 1.839
Ls (m) 0
V (kmph) 80
e (%) NC
LM-24
LM-01
LM-23
ROAD STUDS AT 18 m C/C
END OF SERVICE ROAD
CH.302+200
END OF SERVICE ROAD
CH.302+000
Match Line
302+000
301+900
START OF SERVICE ROAD
CH.301+800
301+800
301+700
301+600
301+500
REFER TYPICAL .DWG NO. :-
AECOM-60541301-DD-DWG-CR-RM-034
START OF TAPER SERVICE ROAD
CH.301+657.5
Resident Engineer
STUP Consultants Pvt. Ltd.
Nagaon, Assam
Acting Team Leader
STUP Consultants Pvt. Ltd.
Nagaon, Assam
Service road section updated as per AE letter STUP/NH37/R-K/SIL/M.Drwg/2022-23/2205 dated 13/06/2022
R1 June 2022
R0 Aug. 2021 First submission
Rev. Date Description on Revisions
Revisions
TITLE:-
FROM Km. 301+000 To Km. 305+000
DRAWING NO.:-
AECOM-DELD15159-DD-DWG- RM-039
SCALE:-
CONSULTANTS:-
AECOM
9th Floor, Infinity Tower C DLF Cyber City DLF Phase II, Gurgaon-122002, Haryana, India
DRAWN DESIGN CHECKED BY APPROVED BY
SL MSR
Team Leader Design Director
EPC CONTRACTOR:-
SIMPLEX INFRASTRUCTURES LIMITED
27, SHAKESPEARE SARANI, KOLKATA-17, INDIA
PROJECT:
FOUR LANING OF NH-37 FROM RANGAGARA TO KALIABOR TINIALI (CH: 297.000 KM TO CH: 315.315 KM) IN NAGAON DISTRICT IN THE STATE OF ASSAM UNDER SARDP-NE, PHASE A ON EPC MODE
SAFETY CONSULTANT:-
Chaitanya Projects Consultancy Pvt. Ltd
PROOF CHECKED CONSULTANT:-
CE TESTING Company Pvt. Ltd
AUTHORITY'S ENGINEER:
STUP Consultants P. Ltd
&
Ayolecza Consultants P. Ltd.
AUTHORISED SIGNATORY DATE
CLIENT:-
NATIONAL HIGHWAYS & INFRASTRUCTURE DEVELOPMENT CORPORATION LTD.

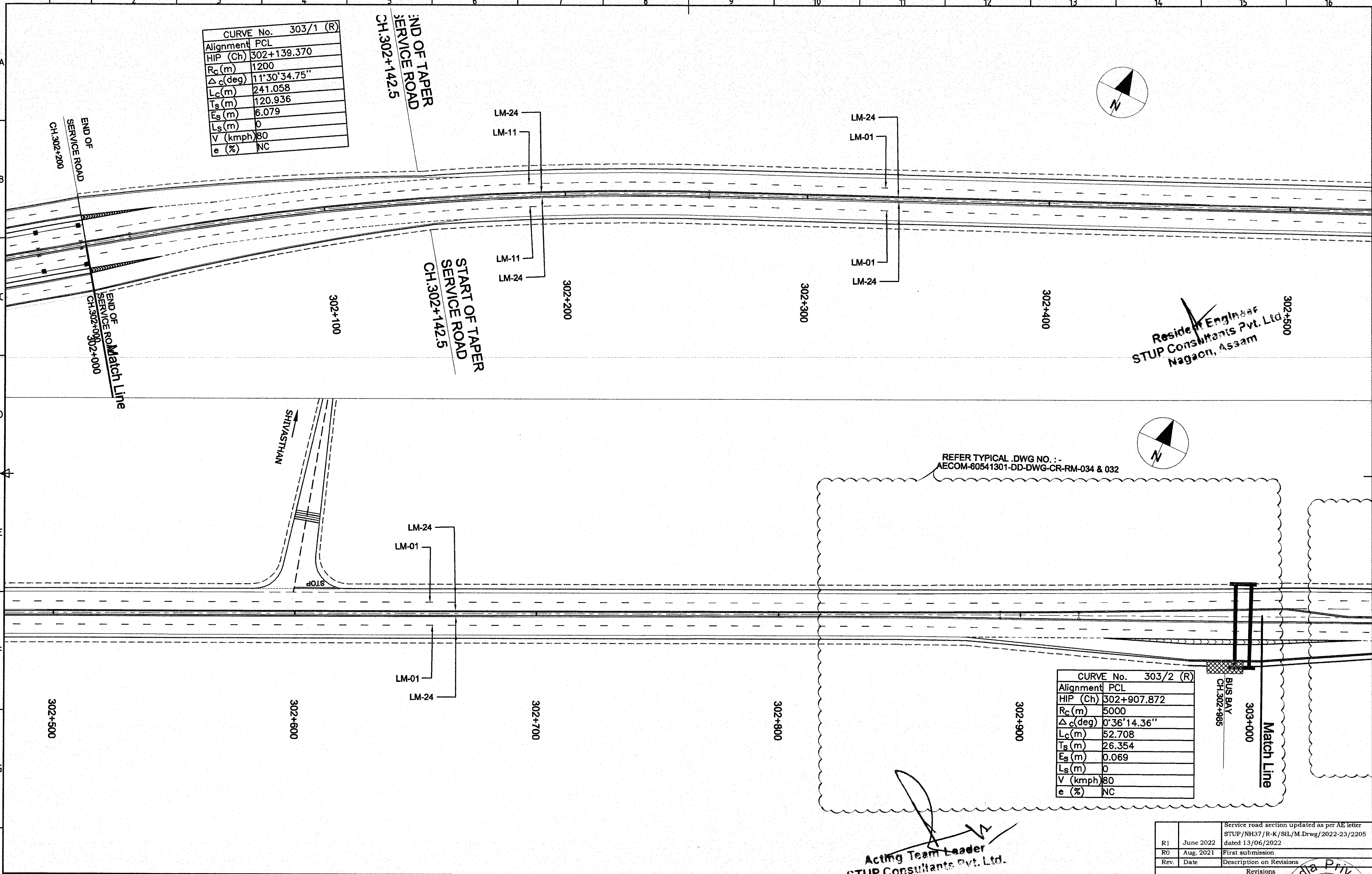

CURVE No.	303/1 (R)
Alignment	PCL
HIP (Ch)	302+139.370
R_c (m)	1200
Δ_c (deg)	11°30'34.75"
L_c (m)	241.058
T_s (m)	120.936
E_s (m)	6.079
L_s (m)	0
V (kmph)	80
e (%)	NC

CURVE No.	303/2 (R)
Alignment	PCL
HIP (Ch)	302+907.872
R_c (m)	5000
Δ_c (deg)	0°36'14.36"
L_c (m)	52.708
T_s (m)	26.354
E_s (m)	0.069
L_s (m)	0
V (kmph)	80
e (%)	NC

Resident Engineer
STUP Consultants Pvt. Ltd
Nagaon, Assam

Acting Team Leader
STUP Consultants Pvt. Ltd.
Nagaon, Assam

Rev.	Date	Description on Revisions
R1	June 2022	Service road section updated as per AE letter STUP/NH37/R-K/SIL/M.Drwg/2022-23/2205 dated 13/06/2022
R0	Aug. 2021	First submission

Revisions

CLIENT:-
NATIONAL HIGHWAYS & INFRASTRUCTURE DEVELOPMENT CORPORATION LTD.

AUTHORITY'S ENGINEER:
STUP Consultants P. Ltd
&
Ayoleeza Consultants P. Ltd.
AUTHORISED SIGNATORY | DATE

PROOF CHECKED CONSULTANT:-
CE TESTING Company Pvt. Ltd
AUTHORISED SIGNATORY | DATE

SAEFTY CONSULTANT:-
Chaitanya Projects Consultancy Pvt. Ltd
AUTHORISED SIGNATORY | DATE

PROJECT:
FOUR LANING OF NH-37 FROM RANGAGARA TO KALIABOR TINIALI (CH: 297.000 KM TO CH: 315.315 KM) IN NAGAON DISTRICT IN THE STATE OF ASSAM UNDER SARDP-NE, PHASE A ON EPC MODE

EPC CONTRACTOR:-
SIMPLEX INFRASTRUCTURES LIMITED
27, SHAKESPEARE SARANI, KOLKATA-17, INDIA

CONSULTANTS:-
AECOM
9th Floor, Infinity Tower C DLF Cyber City
DLF Phase II, Gurgaon-122002, Haryana, India

DRAWN	DESIGN	CHECKED BY	APPROVED BY
		SL (Team Leader)	MSR (Design Director)

SCALE:-

TITLE:-
FROM Km. 302+000 To Km. 303+000

DRAWING NO.:-
AECOM-DELD15159-DD-DWG- RM-040
REV.

AECOM India Private Limited Gurgaon

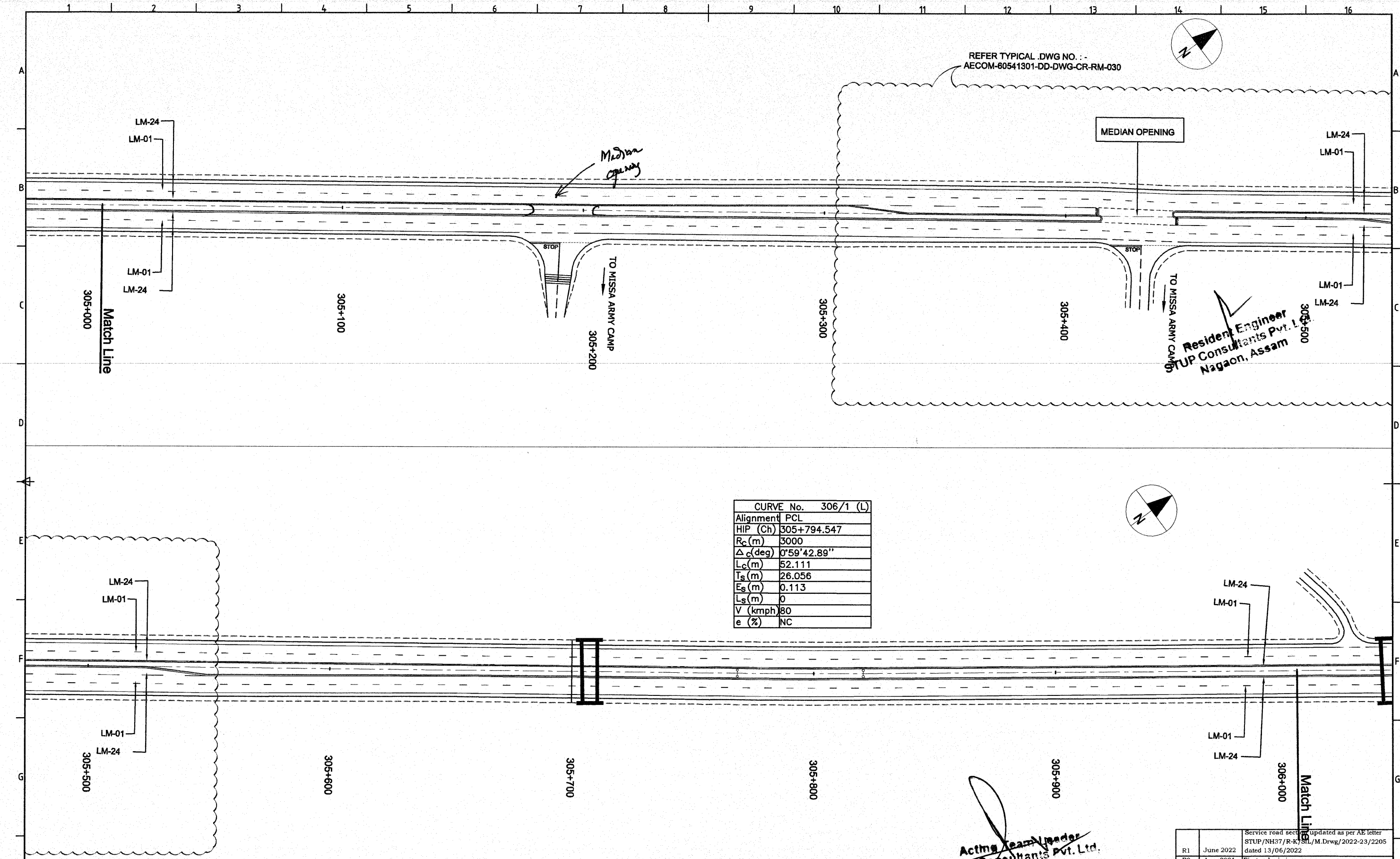

CURVE No.	306/1 (L)
Alignment	PCL
HIP (Ch)	305+794.547
R_c(m)	3000
Δ_c(deg)	0°59'42.89"
L_c(m)	52.111
T_s(m)	26.056
E_s(m)	0.113
L_s(m)	0
V (kmph)	80
e (%)	NC

Resident Engineer
STUP Consultants Pvt. Ltd.
Nagaon, Assam

Acting Team Leader
STUP Consultants Pvt. Ltd.
Nagaon, Assam

Rev.	Date	Description on Revisions
R1	June 2022	Service road section updated as per AE letter STUP/NH37/R-KYSL/M.Drwg/2022-23/2205 dated 13/06/2022
R0	Aug. 2021	First submission

Revisions

CLIENT:- NATIONAL HIGHWAYS & INFRASTRUCTURE DEVELOPMENT CORPORATION LTD.

AUTHORITY'S ENGINEER: STUP Consultants P. Ltd & Ayoleeza Consultants P. Ltd.

PROOF CHECKED CONSULTANT:- CE TESTING Company Pvt. Ltd

SAEFTY CONSULTANT:- Chaitanya Projects Consultancy Pvt. Ltd

AUTHORISED SIGNATORY | DATE | AUTHORISED SIGNATORY | DATE | AUTHORISED SIGNATORY | DATE

PROJECT: FOUR LANING OF NH-37 FROM RANGAGARA TO KALIABOR TINIALI (CH: 297.000 KM TO CH: 315.315 KM) IN NAGAON DISTRICT IN THE STATE OF ASSAM UNDER SARDP-NE, PHASE A ON EPC MODE

EPC CONTRACTOR:- SIMPLEX INFRASTRUCTURES LIMITED, 27, SHAKESPEARE SARANI, KOLKATA-17, INDIA

CONSULTANTS:- AECOM, 9th Floor, Infinity Tower C DLF Cyber City, DLF Phase II, Gurgaon-122002, Haryana, India

DRAWN | DESIGN | CHECKED BY (SL, Team Leader) | APPROVED BY (MSR, Design Director)

SCALE:-

TITLE:- FROM Km. 305+000 To Km. 306+000

DRAWING NO.:- AECOM-DELD15159-DD-DWG- RM-043

REV.:-

AECOM India Private Limited Gurgaon

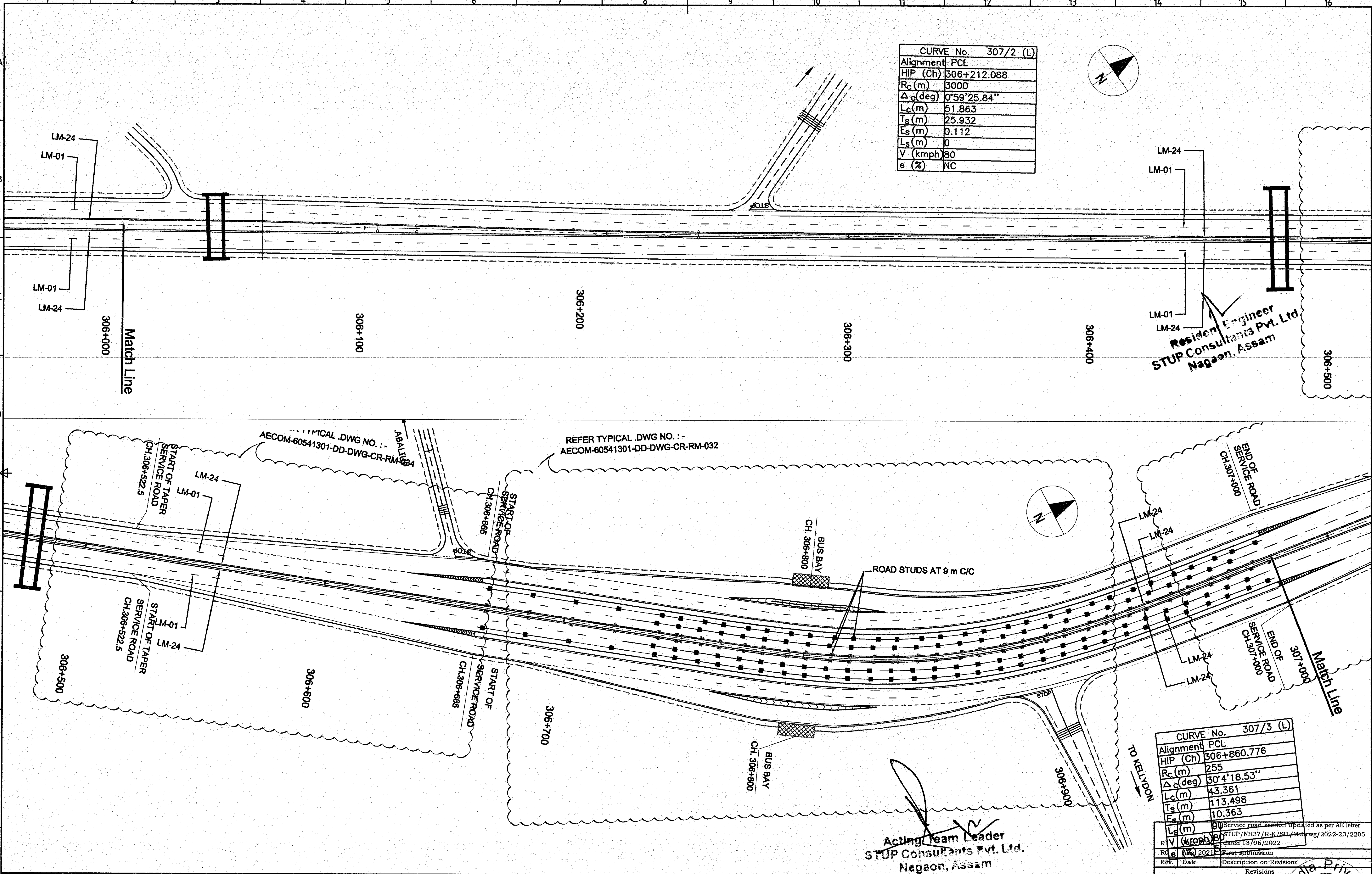

CURVE No.	307/2 (L)
Alignment	PCL
HIP (Ch)	306+212.088
R_c(m)	3000
Δ_c(deg)	0°59'25.84"
L_c(m)	51.863
T_s(m)	25.932
E_s(m)	0.112
L_s(m)	0
V (kmph)	80
e (%)	NC

CURVE No.	307/3 (L)
Alignment	PCL
HIP (Ch)	306+860.776
R_c(m)	255
Δ_c(deg)	30°4'18.53"
L_c(m)	43.361
T_s(m)	113.498
E_s(m)	10.363
L_s(m)	90
V (kmph)	80
e (%)	5

Rev.	Date	Description on Revisions
R1		Service road section updated as per AE letter STUP/NH37/R-K/SIL/M-Drwg/2022-23/2205 dated 13/06/2022
R0	2021	First submission

Revisions

CLIENT:- NATIONAL HIGHWAYS & INFRASTRUCTURE DEVELOPMENT CORPORATION LTD.

AUTHORITY'S ENGINEER: STUP Consultants P. Ltd & Ayoleeza Consultants P. Ltd.

AUTHORISED SIGNATORY | DATE

PROOF CHECKED CONSULTANT:- CE TESTING Company Pvt. Ltd

AUTHORISED SIGNATORY | DATE

SAEFTY CONSULTANT:- Chaitanya Projects Consultancy Pvt. Ltd

AUTHORISED SIGNATORY | DATE

PROJECT: FOUR LANING OF NH-37 FROM RANGAGARA TO KALIABOR TINIALI (CH: 297.000 KM TO CH: 315.315 KM) IN NAGAON DISTRICT IN THE STATE OF ASSAM UNDER SARDP-NE, PHASE A ON EPC MODE

EPC CONTRACTOR:- SIMPLEX INFRASTRUCTURES LIMITED, 27, SHAKESPEARE SARANI, KOLKATA-17, INDIA

CONSULTANTS:- AECOM, 9th Floor, Infinity Tower C DLF Cyber City, DLF Phase II, Gurgaon-122002, Haryana, India

DRAWN	DESIGN	CHECKED BY	APPROVED BY
		SL (Team Leader)	MSR (Design Director)

SCALE:-

TITLE:- FROM Km. 306+000 To Km. 307+000

DRAWING NO.:- AECOM-DELD15159-DD-DWG- RM-044

REV.

AECOM India Private Limited, Gurgaon

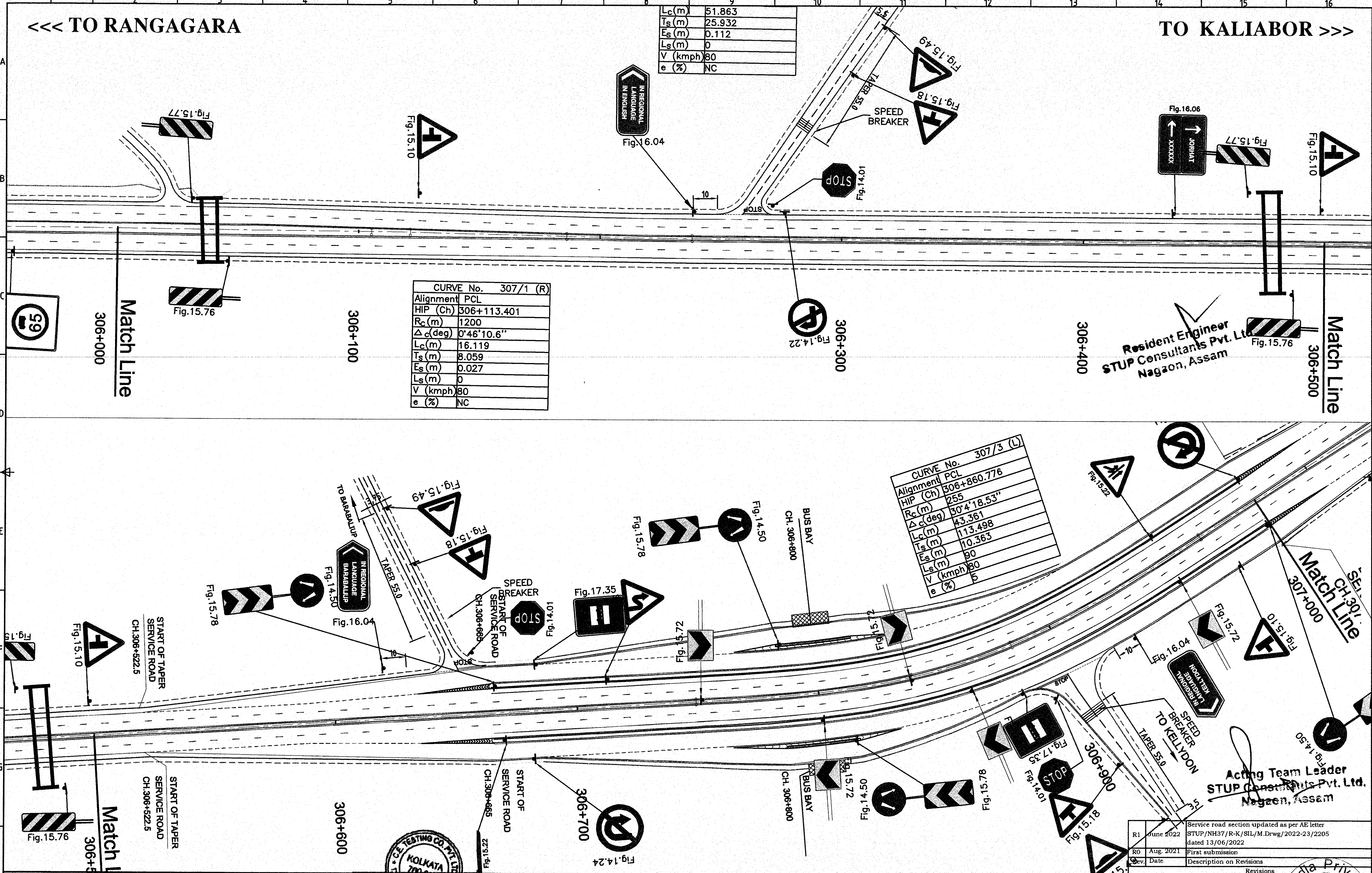

CURVE No.	307/1 (R)
Alignment	PCL
HIP (Ch)	306+113.401
R_c(m)	1200
Δ_c(deg)	0°46'10.6"
L_c(m)	16.119
T_s(m)	8.059
E_s(m)	0.027
L_s(m)	0
V (kmph)	80
e (%)	NC

L_c(m)	51.863
T_s(m)	25.932
E_s(m)	0.112
L_s(m)	0
V (kmph)	80
e (%)	NC

CURVE No.	307/3 (L)
Alignment	PCL
HIP (Ch)	306+860.776
R_c(m)	255
Δ_c(deg)	30°4'18.53"
L_c(m)	43.361
T_s(m)	113.498
E_s(m)	10.363
L_s(m)	90
V (kmph)	80
e (%)	5

Rev.	Date	Description on Revisions
R1	June 2022	Service road section updated as per AE letter STUP/NH37/R-K/SIL/M.Drwg/2022-23/2205 dated 13/06/2022
R0	Aug. 2021	First submission

Revisions

CLIENT:- NATIONAL HIGHWAYS & INFRASTRUCTURE DEVELOPMENT CORPORATION LTD.

AUTHORITY'S ENGINEER: STUP Consultants P. Ltd & Ayoleeza Consultants P. Ltd.

PROOF CHECKING CONSULTANT: C.E. TESTING Company Pvt. Ltd

SAEFTY CONSULTANT:- Chaitanya Projects Consultancy Pvt. Ltd

AUTHORISED SIGNATORY | DATE | AUTHORISED SIGNATORY | DATE | AUTHORISED SIGNATORY | DATE

PROJECT: FOUR LANING OF NH-37 FROM RANGAGARA TO KALIABOR TINIALI (CH: 297.000 KM TO CH: 315.315 KM) IN NAGAON DISTRICT IN THE STATE OF ASSAM UNDER SARDP-NE, PHASE A ON EPC MODE

EPC CONTRACTOR:- SIMPLEX INFRASTRUCTURES LIMITED
27, SHAKESPEARE SARANI, KOLKATA-17, INDIA

CONSULTANTS:- AECOM
9th Floor, Infinity Tower C DLF Cyber City DLF Phase II, Gurgaon-122002, Haryana, India

DRAWN | DESIGN | CHECKED BY: SL (Team Leader) | APPROVED BY: MSR (Design Director)

SCALE:-

TITLE:- FROM Km. 306+000 To Km. 307+000

DRAWING NO.:- AECOM-DELD15159-DD-DWG-RM- 018

REV.

AECOM India Private Limited Gurgaon

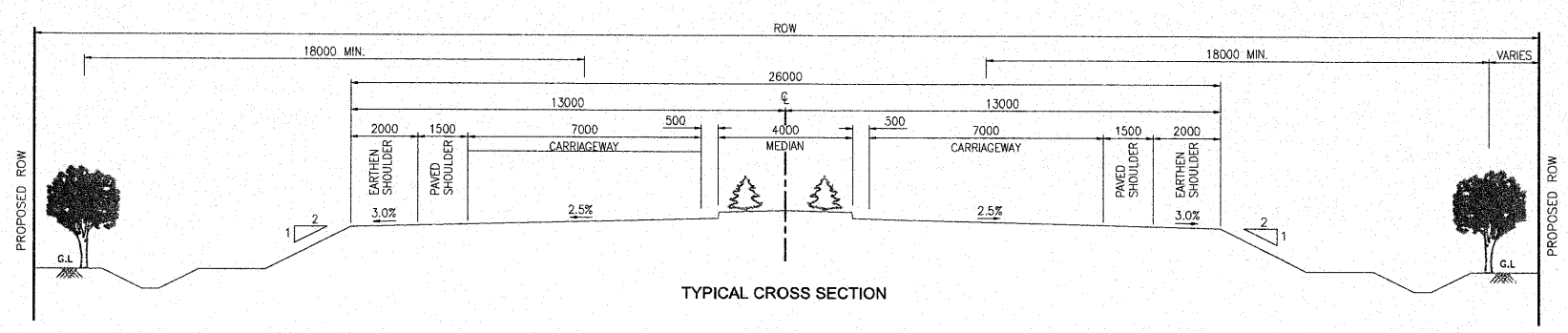

TYPICAL CROSS SECTION

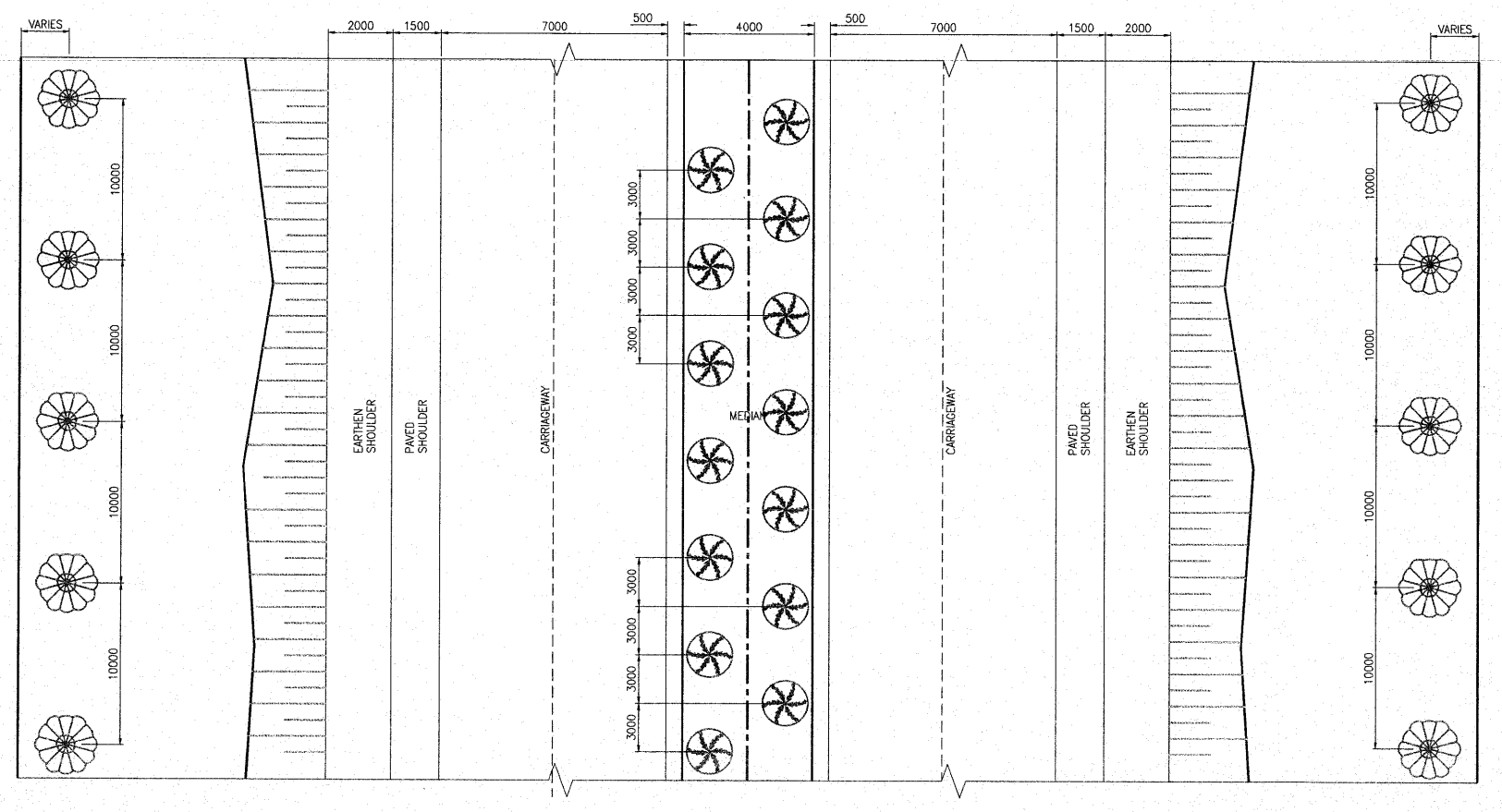

TYPICAL PLANTATION LAYOUT (FOR MEDIAN WIDTH 4.0m.)

Resident Engineer
STUP Consultants Pvt. Ltd.
Nagaon, Assam

SYMBOL	TYPE OF TREE IN MEDIAN
	BOUGAINVILLEA MUSANDA DARANTA CALLANDRA IXURA
SYMBOL	**TYPE OF TREE IN AVENUE**
	NEEM ROSEWOOD SAFED SIRIS GOLMOHAR (BLUE) GOLMOHAR (RED) SHISAM IMLI PIPAL ASHOKA MANGO TREE

Acting Team Leader
STUP Consultants Pvt. Ltd.
Nagaon, Assam

NOTES

1. ALL DIMENSIONS ARE IN MM UNLESS OTHERWISE MENTIONED.
2. NO PLANTATION SHALL BE DONE ON EMBANKMENT SLOPE AND WITHIN 1.5M FROM THE TOE OF CARRIAGEWAY.
3. SET BACK OF TREES ON CURVES:
   IN PLAIN TERRAIN A STOPPING SITE DISTANCE OF 180M CORRESPONDING TO THE DESIGN SPEED OF 100KMPH MAY BE ENSURED ON ALL CURVED PORTION OF THE PROJECT HIGHWAY ALONG THE INNERMOST LANE TO PREVENT IN-VISIBILITY OF TRAFFIC CONTROL DEVICES AND ROAD SIGNS ETC. CAUSED BY UNCONTROLLED TREES/ VEGETATION. HOWEVER, WHERE THERE ARE SITE RESTRICTIONS, THEIR REQUIREMENT MAY BE REDUCED TO 130M CORRESPONDING TO 80 KMPH DESIGN SPEED AS A SPECIAL CASE AS PER IRC:SP:84-2014.
4. PLANTATION IN MEDIANS:
   - IN THE VICINITY OF ROAD INTERSECTIONS AND MEDIAN OPENINGS, MEDIAN PLANTATION SHALL BE AVOIDED TO ENSURE ADEQUATE VISIBILITY.
   - ONE ROW OF SHRUBS IS RECOMMENDED IN 2.5m WIDE MEDIAN AND TWO ROWS OF SHRUBS ON 5.0m WIDE MEDIAN
   - THE SPECIES TO BE PLANTED IN MEDIAN SHOULD BE OF LOW OR MEDIAN HEIGHT TO ACT ALSO AS A SCREEN TO PAVEMENT GLARE FROM INCOMING VEHICLES.
5. FOR SAFE TRAFFIC OPERATIONS MINIMUM 5.0m VERTICAL CLEARANCE OF TREE TO BE PLANTED NEAR ROW SHALL BE AVAILABLE ACROSS THE ROAD WAY.
6. IN MEDIAN PLANTATION, FLOWERING SHURBS OF KANER, TORCH GLOW (A SPECIES OF BOUGHENVILLA), OR LOCALLY SUITABLE PLANTS AVAILABLE IN THE SITE AREA SHALL BE PROVIDED. SPECIES OF PLANTS TO BE PLANTED AS AVENUE PLANTATION SHALL BE GULMOHAR, TAMRIND, MANGO, PEEPLE, BANYAN (FICUS RELIGIOSA), RAIN TREE, JAMUN OR SUCH OTHER LOCALLY AVAILABLE AND SUITABLE TREES.
7. AVENUE & MEDIAN PLANTATION SHALL BE CARRIED OUT BASED ON SITE CONDITIONS.
8. LANDSCAPING SHALL BE PROVIDED ON MEDIAN, GRADE SEPARATED STRUCTURES, ENTRY & EXIT RAMP, ATGRADE ISLANDS OF INTERSECTION LOCATIONS & BUS BAYS.
9. THE DETAILS PROVIDED IN THIS DRAWING ARE AS PER IRC:SP:21-2009 AND IRC:SP:84-2014.
10. ALL TREE / SAPLINGS IN THE AVENUE PLANTATION SHALL BE PROTECTED BY SUITABLE TREE GUARDS.
11. WHEREVER MEDIAN PLANTATION IS TO BE DONE IN RAISED MEDIANS, ISLANDS Etc., IT SHALL BE PUT GARDEN SOIL FOR A MINIMUM DEPTH OF 250mm.

Rev.	Date	Description on Revisions
R0	Aug. 2021	First submission

Revisions

CLIENT:-	AUTHORITY'S ENGINEER:	PROOF CHECKED CONSULTANT:-	SAEFTY CONSULTANT:-	PROJECT:	EPC CONTRACTOR:-	CONSULTANTS:-	SCALE:-	TITLE:-
NATIONAL HIGHWAYS & INFRASTRUCTURE DEVELOPMENT CORPORATION LTD.	STUP Consultants P. Ltd & Ayoleeza Consultants P. Ltd.	CE TESTING Company Pvt. Ltd	Chaitanya Projects Consultancy Pvt. Ltd	FOUR LANING OF NH-37 FROM RANGAGARA TO KALIABOR TINIALI (CH: 297.000 KM TO CH: 315.315 KM) IN NAGAON DISTRICT IN THE STATE OF ASSAM UNDER SARDP-NE, PHASE A ON EPC MODE	SIMPLEX INFRASTRUCTURES LIMITED 27, SHAKESPEARE SARANI, KOLKATA-17, INDIA	AECOM 9th Floor, Infinity Tower C DLF Cyber City DLF Phase II, Gurgaon-122002, Haryana, India	NTS	TYPICAL DETAILS OF HIGHWAY LANDSCAPING
AUTHORISED SIGNATORY / DATE	AUTHORISED SIGNATORY / DATE	AUTHORISED SIGNATORY / DATE	AUTHORISED SIGNATORY / DATE		DRAWN / DESIGN / CHECKED BY (Team Leader) / APPROVED BY (Design Director)	SL / MSR		DRAWING NO.:- AECOM-DELD15159-DD-DWG- MISC-056 / R0

AECOM India Private Limited Gurgaon

MISCELLANEOUS DRAWINGS

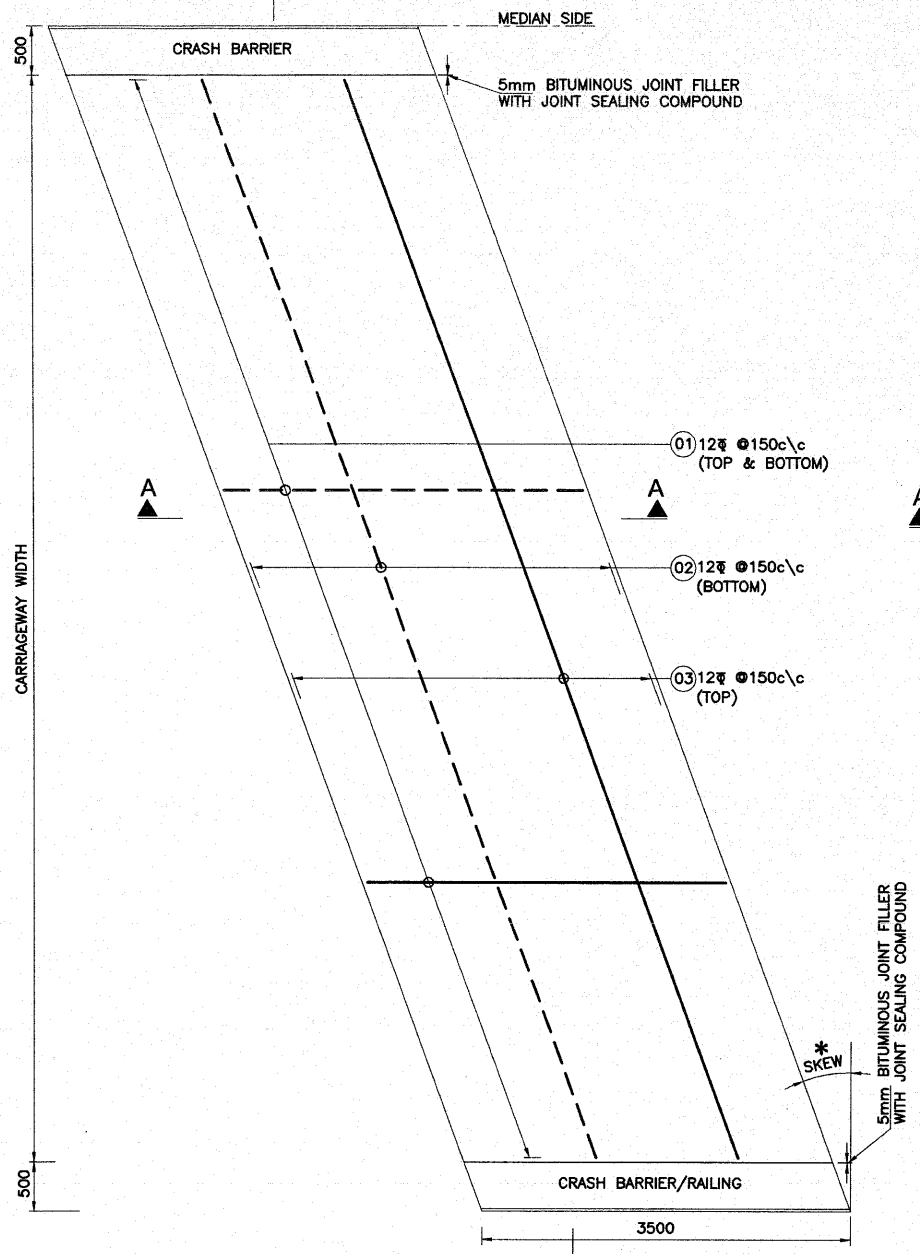

PLAN
(SCALE 1:100)
(FOR SKEW BRIDGES)

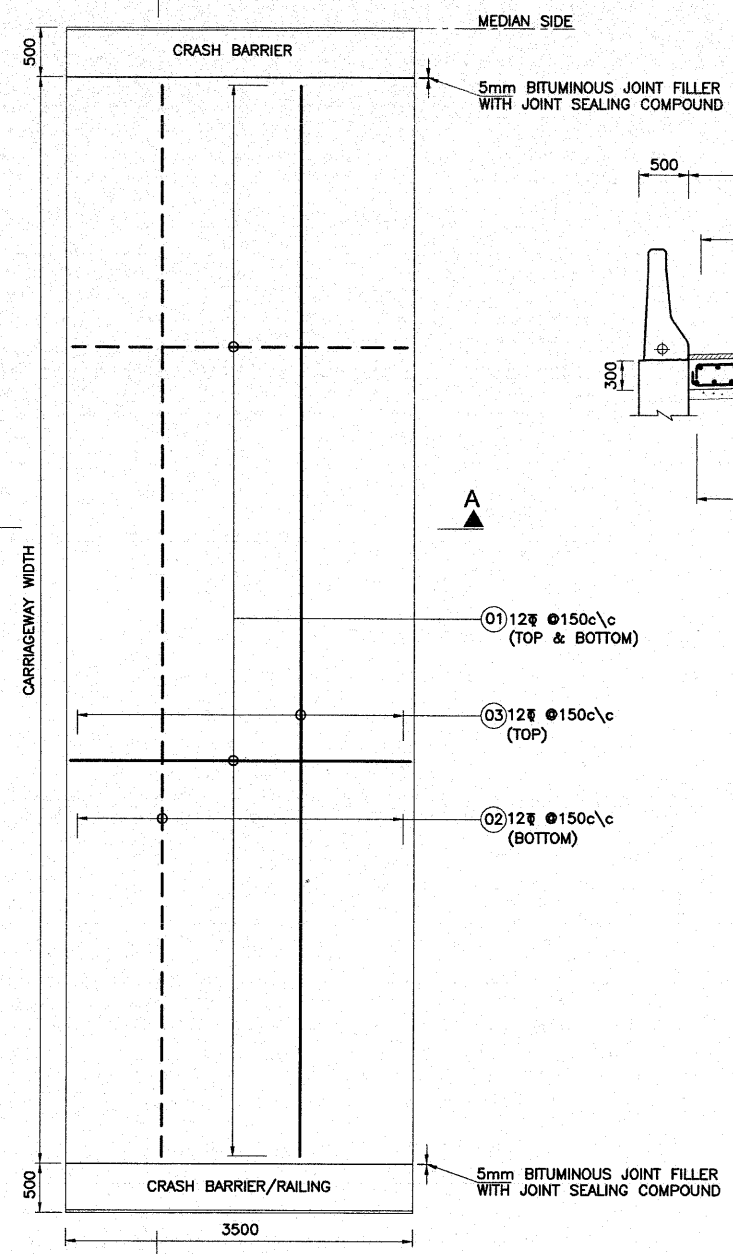

PLAN
(SCALE 1:100)
(FOR RIGHT BRIDGES)

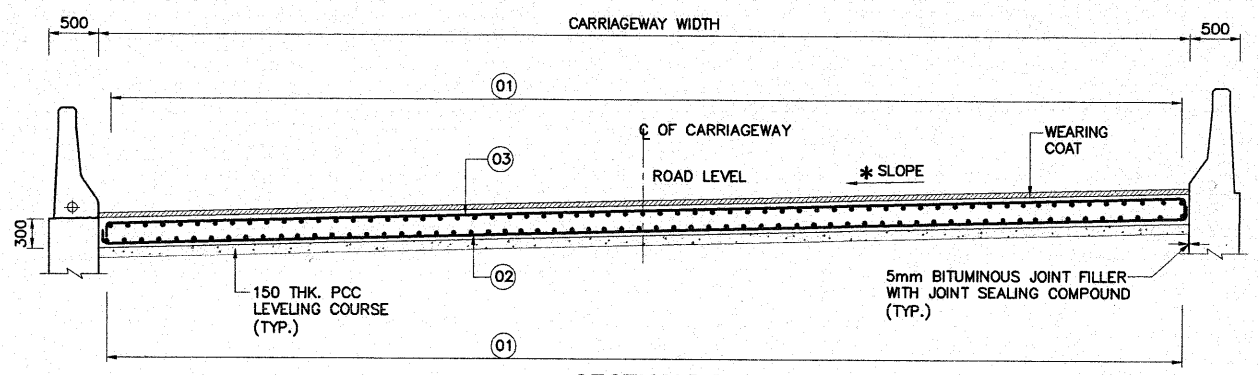

SECTION B-B
(SCALE 1:100)

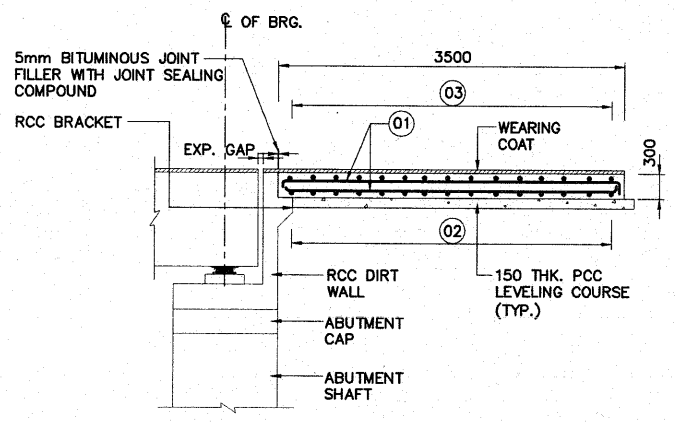

SECTION A-A
(SCALE 1:100)

NOTES-

1. ALL DIMENSIONS ARE IN MM UNLESS OTHERWISE MENTIONED. ONLY WRITTEN DIMENSIONS ARE TO BE FOLLOWED AND NO DIMENSION IS TO BE SCALED.
2. THE REINFORCEMENT SHALL BE HYSD BARS OF GRADE DESIGNATION Fe 500D CONFORMING TO IS:1786–2008.
3. CONCRETE SHALL BE DESIGN MIX WITH A MINIMUM 28 DAYS CHARACTERISTIC CUBE STRENGTH FOR DIFFERENT ELEMENTS AS FOLLOWS:
   a. RCC APPROACH SLAB – M30
   b. PCC LEVELING COURSE – M15
4. CLEAR COVER TO OUTERMOST REINFORCEMENT SHALL BE 40MM.
5. FILLING BEHIND THE ABUTMENT AND PROPER COMPACTION OF THE EMBANKMENT BELOW THE APPROACH SLAB SHOULD BE ENSURED BY THE CONTRACTOR WITH SELECTED MATERIAL AS PER THE SPECIFICATIONS GIVEN IN APPENDIX:6 OF IRC:78–2014, HAVING SOIL PARAMETERS AS MENTIONED IN RESPECTIVE OF BRIDGE DRAWINGS.
6. FOR REINFORCEMENT DETAILS OF BRACKET SUPPORTING APPROACH SLAB REFER RESPECTIVE BRIDGE DRAWINGS.
7. WEARING COAT THICKNESS SHALL BE AS PER RESPECTIVE BRIDGE DRAWINGS.
8. THIS DRAWING SHALL BE READ IN CONJUNCTION WITH THE RESPECTIVE BRIDGE DRAWINGS.

*AS PER BRIDGE/PLAN & PROFILE DRAWINGS.

LEGEND:-

– – – – – – ON BOTTOM FACE

———— ON TOP FACE

Resident Engineer
STUP Consultants Pvt. Ltd.
Nagaon, Assam

Acting Team Leader
STUP Consultants Pvt. Ltd.
Nagaon, Assam

AECOM India Private Limited

Rev.	Date	Description on Revisions
R0	14-09-2017	FIRST SUBMISSION

Revisions

CLIENT:- NATIONAL HIGHWAYS & INFRASTRUCTURE (Development Coporation Ltd)

AUTHORITY'S ENGINEER: STUP Consultants P. Ltd & Ayoleeza Consultants P. Ltd.

AUTHORISED SIGNATORY | DATE

PROOF CHECK CONSULTANT:- CE TEST CE TESTING COMPANY PVT. LTD.

AUTHORISED SIGNATORY | DATE

SAEFTY CONSULTANT:- Chaitanya Projects Consultancy Pvt. Ltd

AUTHORISED SIGNATORY | DATE

PROJECT: FOUR LANING OF NH-37 FROM RANGAGARA TO KALIABOR TINIALI (CH: 297.000 KM TO CH: 315.315 KM) IN NAGAON DISTRICT IN THE STATE OF ASSAM UNDER SARDP-NE, PHASE A ON EPC MODE

EPC CONTRACTOR:- SIMPLEX INFRASTRUCTURES LIMITED, 27, SHAKESPEARE SARANI, KOLKATA-17, INDIA

CONSULTANTS:- AECOM, 9th Floor, Infinity Tower C DLF Cyber City, DLF Phase II, Gurgaon-122002, Haryana, India

DRAWN	DESIGN	CHECKED BY	APPROVED BY
MANISH VERMA	S. YADAV	S.P. SINGH	S. RASTOGI

SCALE:- AS SHOWN

TITLE:- MISCELLANEOUS DRAWINGS (TYPICAL DETAILS OF APPROACH SLAB - SKEW & RIGHT DIRECTION)

DRAWING NO.:- AECOM-DELD15159-DD-DWG-MISC-01 (SH1 OF 7) REV. R0

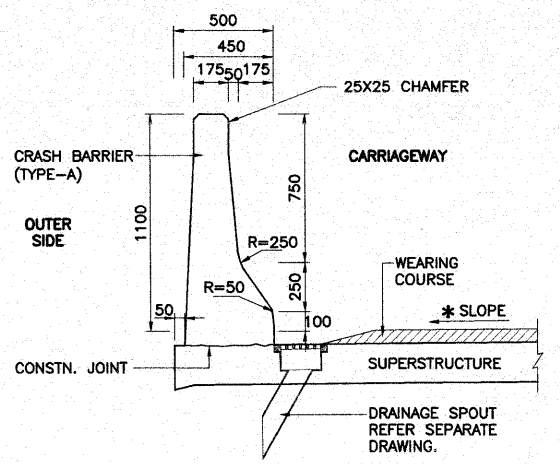

DIMENSION DETAILS OF CRASH BARRIER FOR STRUCTURES WITHOUT FOOTPATH

(SCALE 1:25)

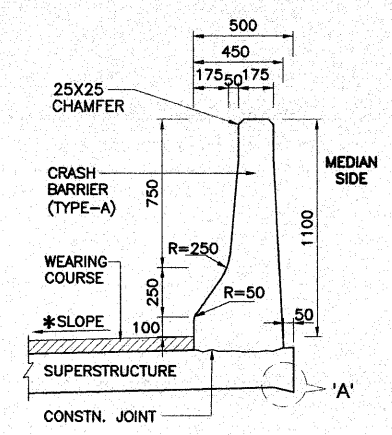

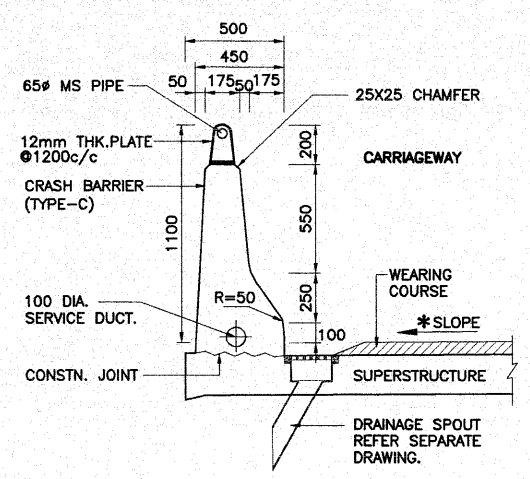

DIMENSION DETAILS OF CRASH BARRIER WITH MS PIPE ON TOP FOR STRUCTURES WITHOUT FOOTPATH

(SCALE 1:25)

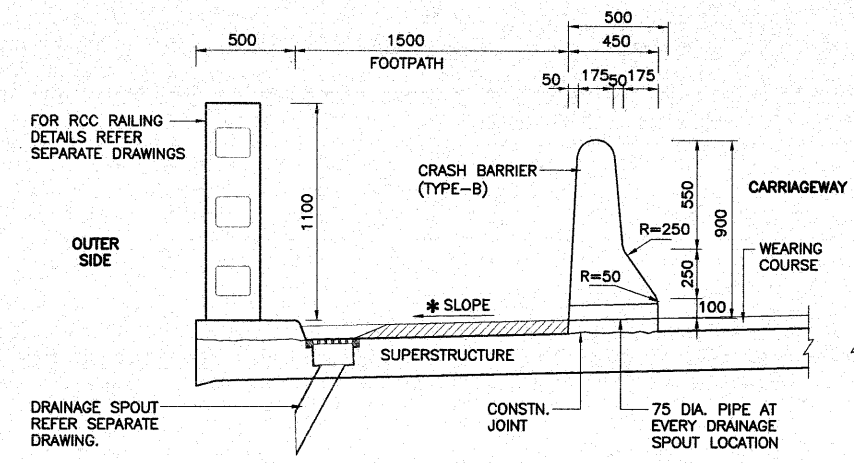

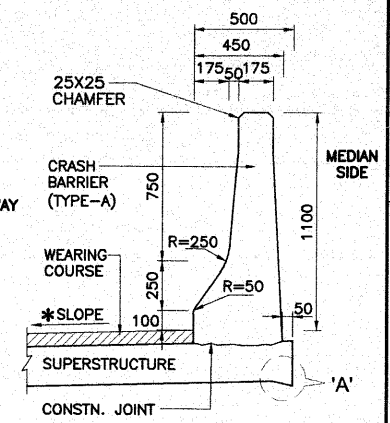

DIMENSION DETAILS OF CRASH BARRIER FOR STRUCTURES WITH FOOTPATH

(SCALE 1:25)

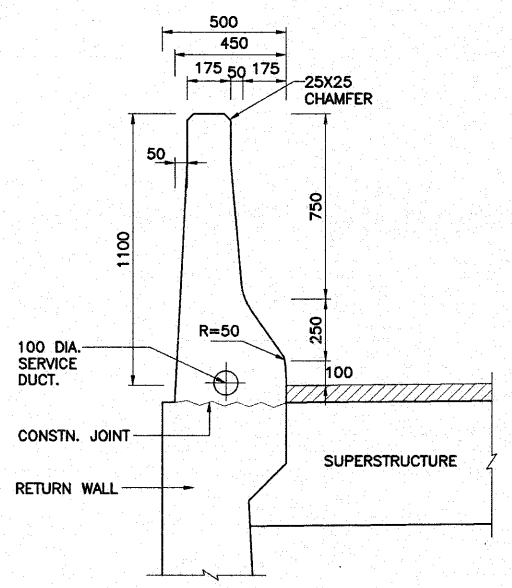

DIMENSION DETAILS OF CRASH BARRIER WITH RETURN WALL

(SCALE 1:20)

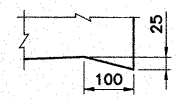

DETAIL-`A'

SHOWING DRIP COURSE

(SCALE 1:20)

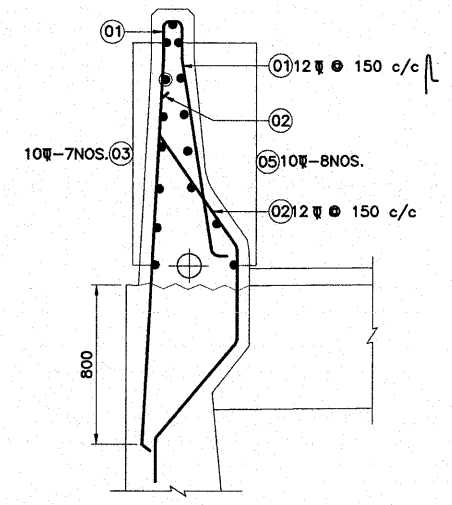

REINFORCEMENT DETAILS OF CRASH BARRIER WITH RETURN WALL

(SCALE 1:20)

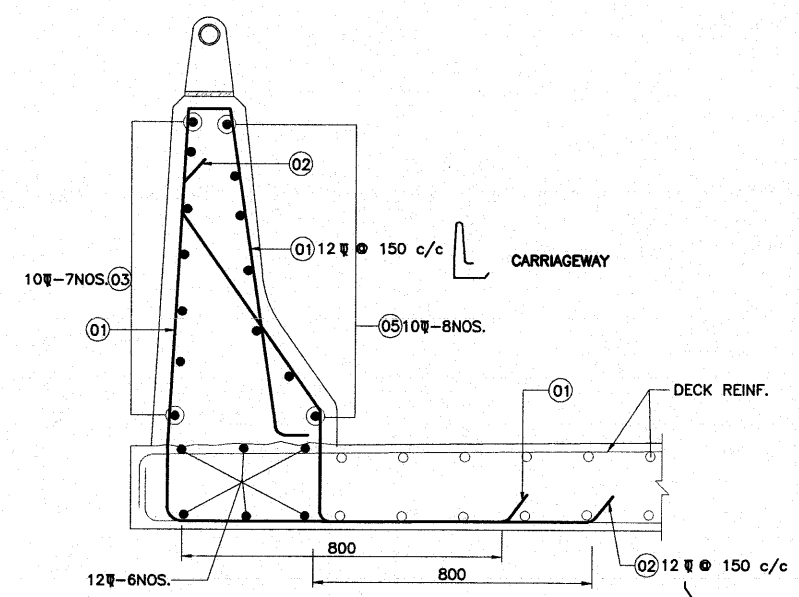

REINFORCEMENT DETAILS OF CRASH BARRIER (TYPE-C)

(SCALE 1:30)

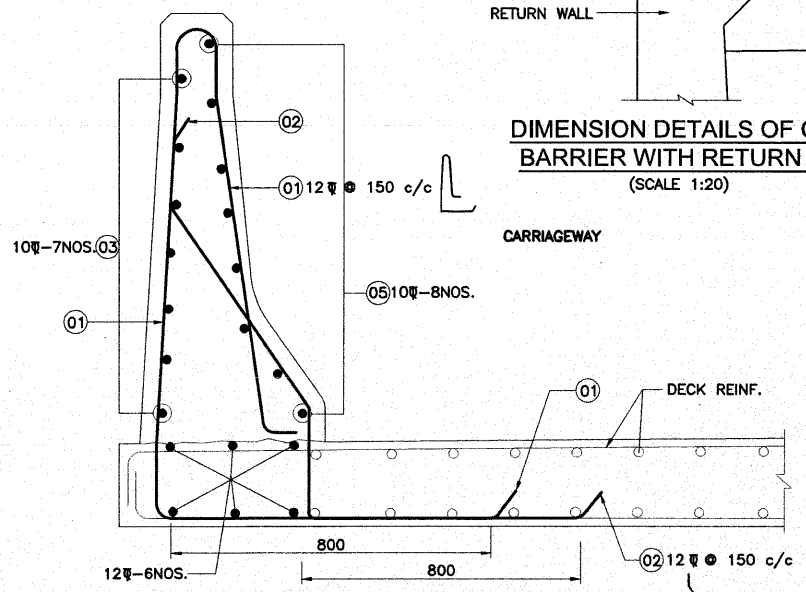

REINFORCEMENT DETAILS OF CRASH BARRIER (TYPE-A)

(SCALE 1:30)

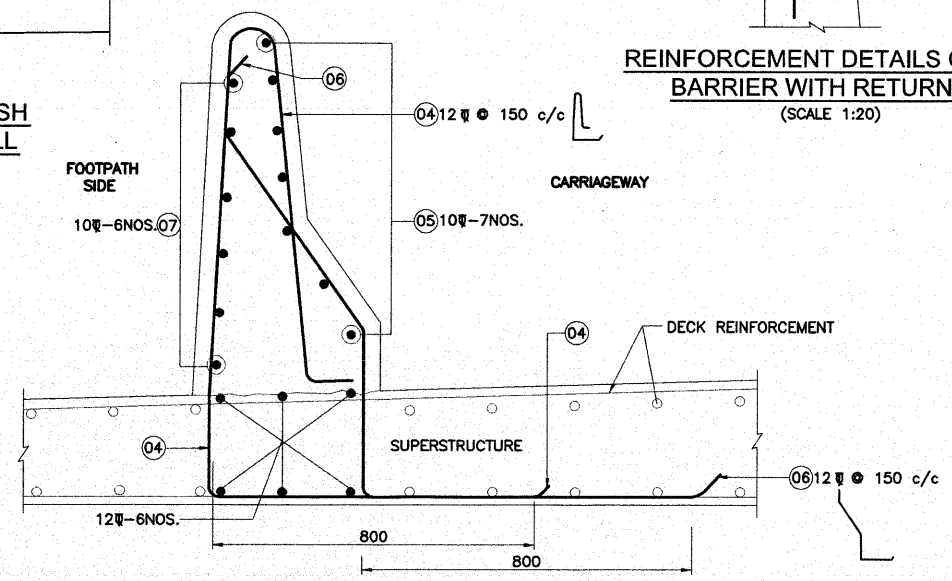

REINFORCEMENT DETAILS OF CRASH BARRIER (TYPE-B)

(SCALE 1:30)

NOTES:

1. ALL DIMENSIONS ARE IN MM UNLESS OTHERWISE MENTIONED. ONLY WRITTEN DIMENSIONS ARE TO BE FOLLOWED.
2. THE CRASH BARRIER DESIGN HAS BEEN ADOPTED AS PER CLAUSE 109.6.3 OF IRC:5–2015.
3. THE CONCRETE GRADE SHALL BE M40.
4. THE REINFORCEMENT SHALL BE HYSD BARS OF GRADE DESIGNATION Fe 500D CONFORMING TO IS:1786–2008.
5. CLEAR COVER TO OUTERMOST STEEL IS 40MM.
6. DOWEL BARS OF THE CRASH BARRIER SHALL BE PROPERLY ANCHORED INTO THE DECK SLAB.
7. SUITABLE REFLECTIVE (LUMINOUS) DEVICES SHALL BE PROVIDED ON THE TRAFFIC FACE OF THE BARRIER AT SUITABLE INTERVALS TO ENSURE ADEQUATE VISIBILITY DURING NIGHT AND FOGGY CONDITIONS.
8. PAINTING SHALL BE DONE ON CRASH BARRIER INCLUDING ZEBRA MARKS.
9. PROVIDING AND FIXING 65MM NB MS PIPE RAIL WITH VERTICAL STIFFNER, BASE PLATE ANCHOR BOLTS AT SPACING AS MENTIONED IN DRAWING ON CRASH BARRIER COMPLETE INCLUDING PROVIDING THREE OR MORE COATS OF EPOXY PAINT OF APPROVED COLOUR MAKE AND QUALITY OVER A COAT OF EPOXY PRIMER COMPLETE AS PER DRAWINGS AND TECHNICAL SPECIFICATIONS SECTIONS 1900 & CLAUSE 2703.
10. THIS DRAWING SHALL BE READ IN CONJUNCTION WITH THE RESPECTIVE BRIDGE DRAWINGS.

✱AS PER BRIDGE/PLAN & PROFILE DRAWINGS.

AECOM India Private Limited Gurgaon

Resident Engineer STUP Consultants Pvt. Ltd. Nagaon, Assam

Acting Team Leader STUP Consultants Pvt. Ltd. Nagaon, Assam

Rev.	Date	Description on Revisions
R0	14-09-2017	FIRST SUBMISSION

Revisions

CLIENT:-	AUTHORITY'S ENGINEER:	PROOF CHECK CONSULTANT:-	SAEFTY CONSULTANT:-	PROJECT:	EPC CONTRACTOR:-	CONSULTANTS:-	SCALE:-	TITLE:-
NATIONAL HIGHWAYS & INFRASTRUCTURE (Development Coporation Ltd)	STUP Consultants P. Ltd & Ayoleeza Consultants P. Ltd.	CE TEST	Chaitanya Projects Consultancy Pvt. Ltd	FOUR LANING OF NH-37 FROM RANGAGARA TO KALIABOR TINIALI (CH: 297.000 KM TO CH: 315.315 KM) IN NAGAON DISTRICT IN THE STATE OF ASSAM UNDER SARDP-NE, PHASE A ON EPC MODE	SIMPLEX INFRASTRUCTURES LIMITED 27, SHAKESPEARE SARANI, KOLKATA-17, INDIA	AECOM 9th Floor, Infinity Tower C DLF Cyber City DLF Phase II, Gurgaon-122002, Haryana, India	AS SHOWN	MISCELLANEOUS DRAWINGS (TYPICAL DIMENSION & REINFORCEMENT DETAILS OF RCC CRASH BARRIER)
	AUTHORISED SIGNATORY / DATE	AUTHORISED SIGNATORY / DATE	AUTHORISED SIGNATORY / DATE			DRAWN: MANISH VERMA; DESIGN: S. YADAV; CHECKED BY: S. P. SINGH; APPROVED BY: S. RASTOGI		DRAWING NO.:- AECOM-DELD15159-DD-DWG-MISC-01 (SH2 OF 7); REV. R0

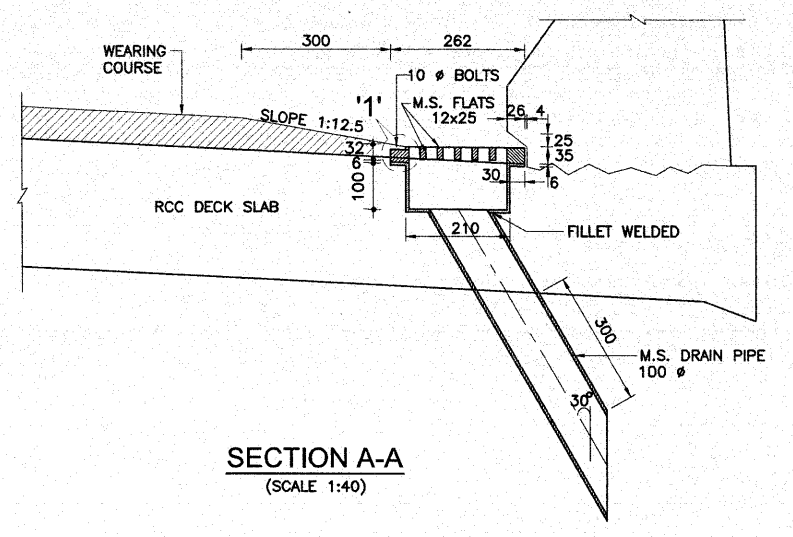

SECTION A-A
(SCALE 1:40)

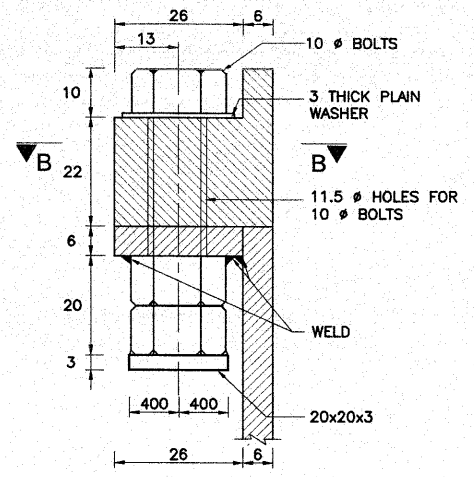

DETAIL '1'
(SCALE 1:40)

NOTES

1. ALL DIMENSIONS ARE IN MM UNLESS OTHERWISE MENTIONED. ONLY WRITTEN DIMENSIONS ARE TO BE FOLLOWED AND NO DIMENSION IS TO BE SCALED.
2. DRAINAGE SPOUT AND COLLECTION PIT ASSEMBLY SHALL BE FABRICATED FROM MILD STEEL AND AFTER FABRICATION THE COMPLETE ASSEMBLY EXCEPT GRATING SHALL BE GIVEN A HOT DIPPED GALVANISED COATING.
3. SPACING OF DRAINAGE SPOUT SHALL NOT EXCEED 5.0M CENTER TO CENTER.
4. THIS DRAWING SHALL BE READ IN CONJUNCTION WITH THE RESPECTIVE BRIDGE DRAWINGS.

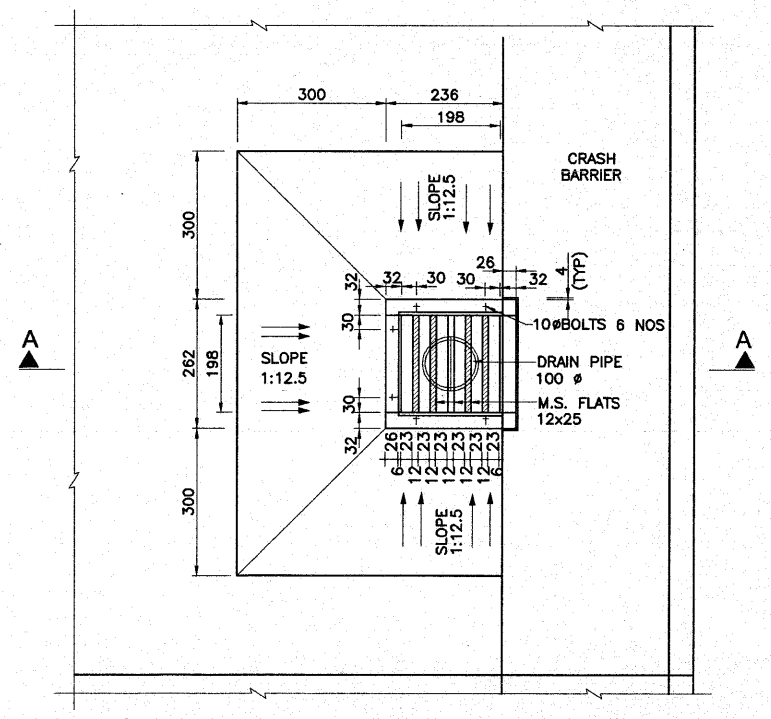

PLAN
DRAINAGE SPOUT AND COLLECTION PIT
(SCALE 1:40)

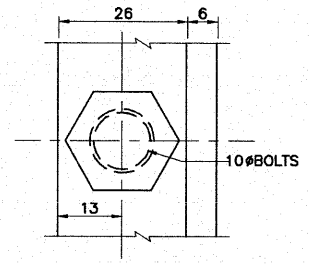

SECTION B-B
(SCALE 1:40)

Acting Team Leader
STUP Consultants Pvt. Ltd.
Nagaon, Assam

AECOM India Private Limited
Gurgaon

Resident Engineer
STUP Consultants Pvt. Ltd.
Nagaon, Assam

Rev.	Date	Description on Revisions
R0	14-09-2017	FIRST SUBMISSION

Revisions

CLIENT:- NATIONAL HIGHWAYS & INFRASTRUCTURE (Development Coporation Ltd)

AUTHORITY'S ENGINEER: STUP Consultants P. Ltd & Ayoleeza Consultants P. Ltd.
AUTHORISED SIGNATORY | DATE

PROOF CHECK CONSULTANT:- CETEST C E TESTING COMPANY PVT. LTD.
AUTHORISED SIGNATORY | DATE

SAEFTY CONSULTANT:- Chaitanya Projects Consultancy Pvt. Ltd
AUTHORISED SIGNATORY | DATE

PROJECT: FOUR LANING OF NH-37 FROM RANGAGARA TO KALIABOR TINIALI (CH: 297.000 KM TO CH: 315.315 KM) IN NAGAON DISTRICT IN THE STATE OF ASSAM UNDER SARDP-NE, PHASE A ON EPC MODE

EPC CONTRACTOR:- SIMPLEX INFRASTRUCTURES LIMITED, 27, SHAKESPEARE SARANI, KOLKATA-17, INDIA

CONSULTANTS:- AECOM, 9th Floor, Infinity Tower C DLF Cyber City, DLF Phase II, Gurgaon-122002, Haryana, India

MANISH VERMA	S. YADAV	S. P. SINGH	S. RASTOGI
DRAWN	DESIGN	CHECKED BY	APPROVED BY

SCALE:- AS SHOWN

TITLE:- MISCELLANEOUS DRAWINGS (TYPICAL DETAILS OF DRAINAGE SPOUT)

DRAWING NO.:- AECOM-DELD15159-DD-DWG-MISC-01 (SH3 OF 7) REV. R0

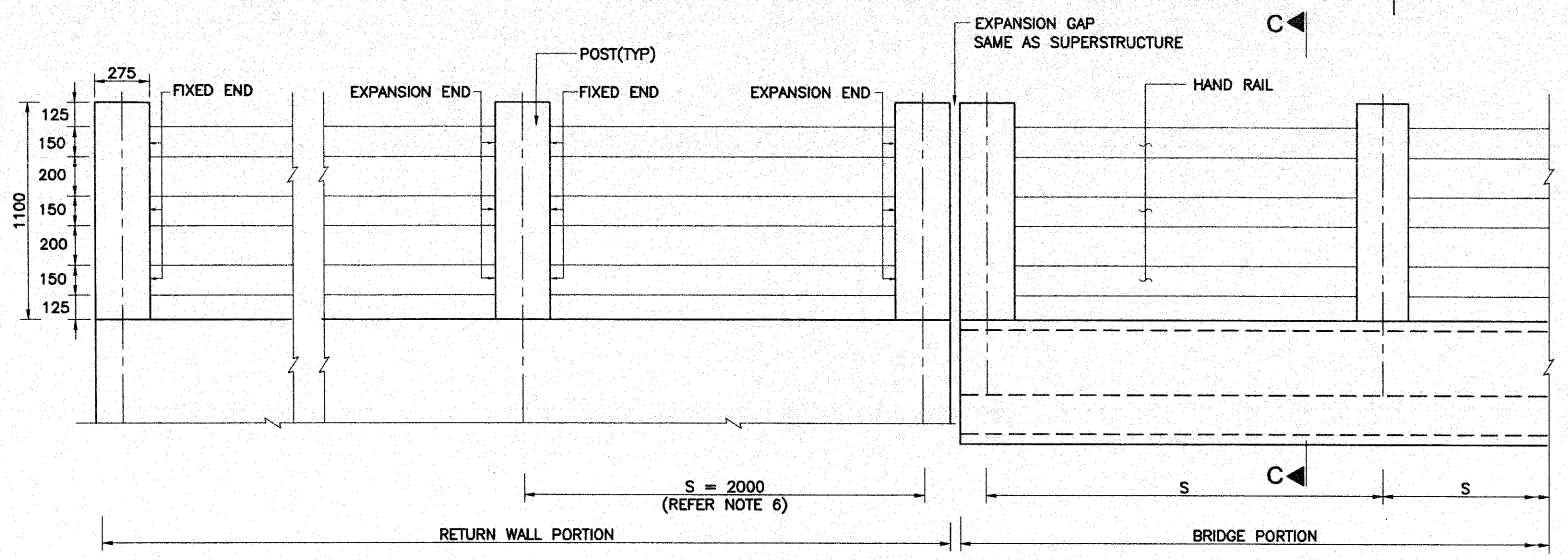

ELEVATION
SCALE 1:25

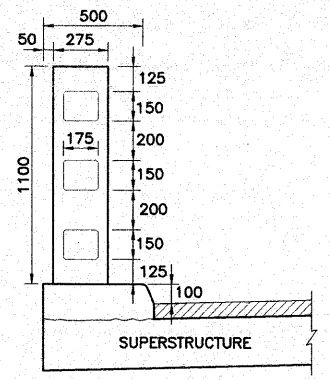

SECTION C-C
SCALE 1:25

NOTES:

1. ALL DIMENSIONS ARE IN MM UNLESS OTHERWISE MENTIONED. ONLY WRITTEN DIMENSIONS ARE TO BE FOLLOWED.
2. THE HAND RAIL DESIGN HAS BEEN ADOPTED AS PER MORTH STANDARD DRAWING.
3. THE CONCRETE GRADE SHALL BE M30.
4. THE REINFORCEMENT SHALL BE HYSD BARS OF GRADE DESIGNATION Fe 500D CONFORMING TO IS:1786–2008.
5. CLEAR COVER TO OUTERMOST STEEL IS 50MM.
6. CENTER TO CENTER SPACING 'S' BETWEEN SUCCESSIVE VERTICAL POSTS SHOWN IN THE ELEVATION SHALL BE ADJUSTED TO SUIT THE LENGTH OF THE BRIDGE SPAN FOR WHICH THE RAILING IS USED BUT IN NO CASE IT SHALL EXCEED 2000MM.
7. CASTING OF THE POST SHALL BE DONE IN SINGLE POUR AFTER ACCURATELY POSITIONING THE PRECAST HANDRAILS.
8. THIS DRAWING SHALL BE READ IN CONJUNCTION WITH THE RESPECTIVE BRIDGE DRAWINGS.

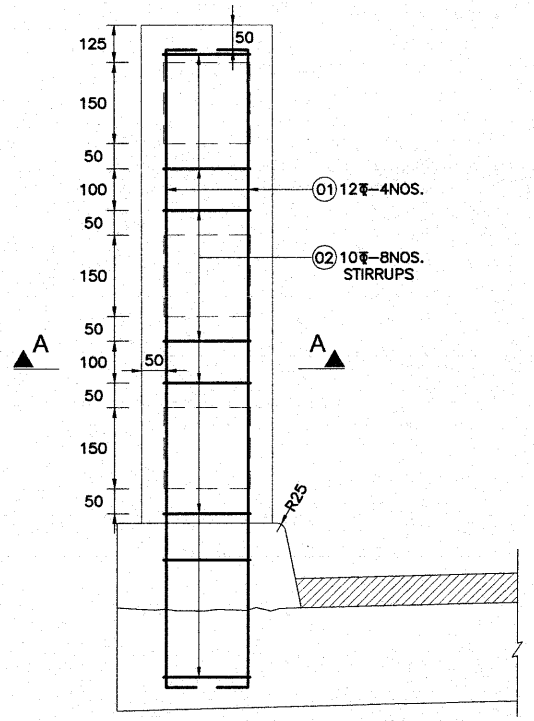

REINF. DETAILS OF RAILING POST
SCALE 1:25

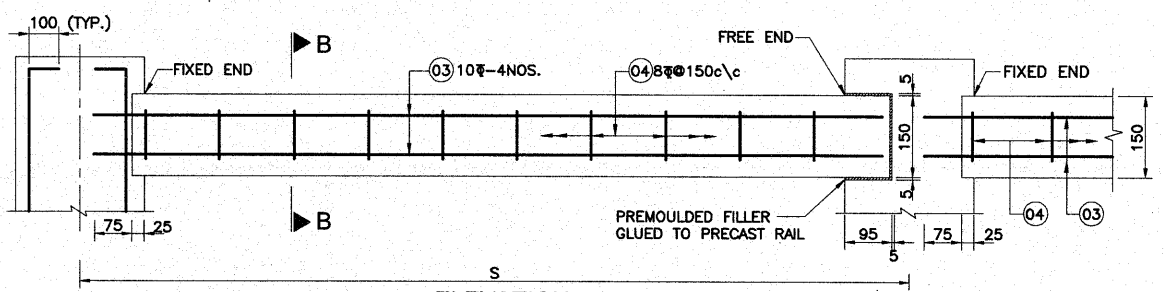

ELEVATION
SCALE 1:25

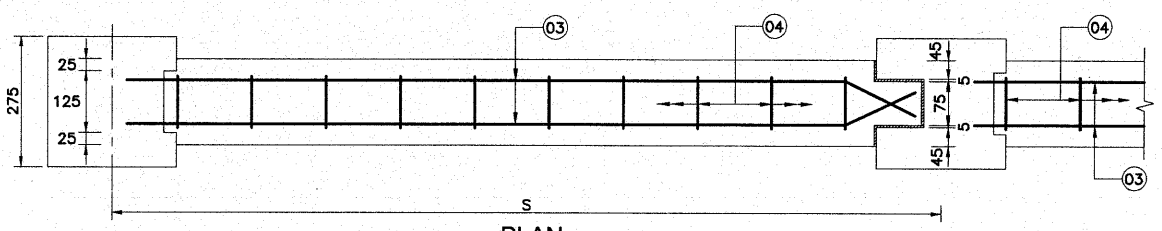

PLAN
SCALE 1:25

REINF. DETAILS OF PRECAST HANDRAIL

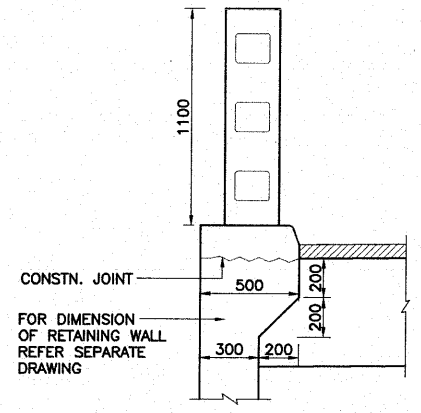

DIMENSION DETAIL OF
RCC RAILING

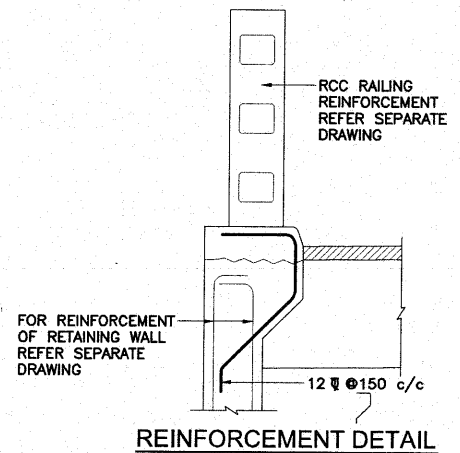

REINFORCEMENT DETAIL

TYPICAL RAILING ON RETAINING WALL
(SCALE 1:25)

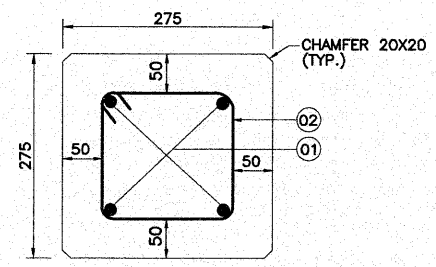

SECTION A-A
SCALE 1:25

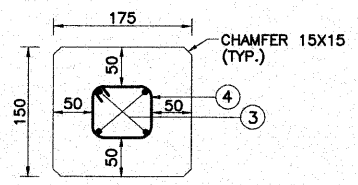

SECTION B-B
SCALE 1:25

Acting Team Lead
STUP Consultants Pvt. Ltd.
Nagaon, Assam

Resident Engineer
STUP Consultants Pvt. Ltd.
Nagaon, Assam

AECOM India Private Limited Gurgaon

Rev.	Date	Description on Revisions
R0	14-09-2017	FIRST SUBMISSION

Revisions

CLIENT:- NATIONAL HIGHWAYS & INFRASTRUCTURE (Development Coporation Ltd)

AUTHORITY'S ENGINEER: STUP Consultants P. Ltd & Ayoleeza Consultants P. Ltd.

AUTHORISED SIGNATORY | DATE

PROOF CHECK CONSULTANT:- CETEST

AUTHORISED SIGNATORY | DATE

SAEFTY CONSULTANT:- Chaitanya Projects Consultancy Pvt. Ltd

AUTHORISED SIGNATORY | DATE

PROJECT: FOUR LANING OF NH-37 FROM RANGAGARA TO KALIABOR TINIALI (CH: 297.000 KM TO CH: 315.315 KM) IN NAGAON DISTRICT IN THE STATE OF ASSAM UNDER SARDP-NE, PHASE A ON EPC MODE

EPC CONTRACTOR:- SIMPLEX INFRASTRUCTURES LIMITED, 27, SHAKESPEARE SARANI, KOLKATA-17, INDIA

CONSULTANTS:- AECOM, 9th Floor, Infinity Tower C DLF Cyber City, DLF Phase II, Gurgaon-122002, Haryana, India

DRAWN	DESIGN	CHECKED BY	APPROVED BY
MANISH VERMA	S. YADAV	S. P. SINGH	S. RASTOGI

SCALE:- AS SHOWN

TITLE:- MISCELLANEOUS DRAWINGS (TYPICAL DIMENSION AND REINFORCEMENT DETAILS OF RCC HANDRAIL)

DRAWING NO.:- AECOM-DELD15159-DD-DWG-MISC-01 (SH4 OF 7) REV. R0

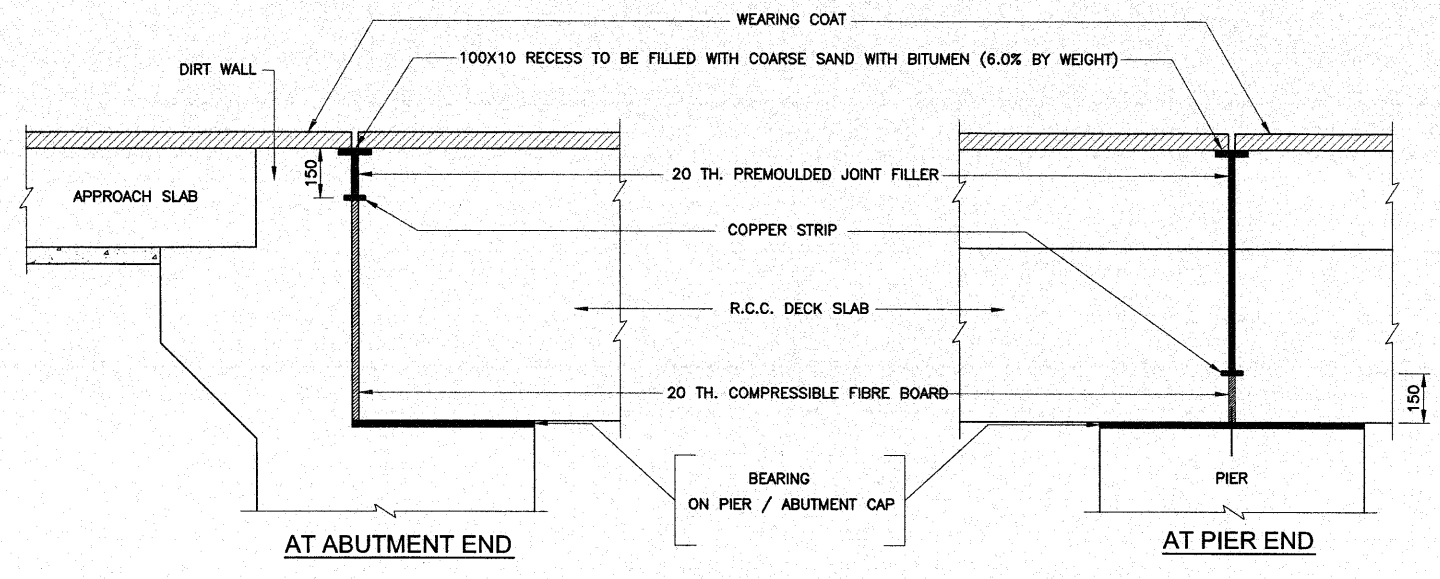

DETAILS OF FILLER TYPE EXPANSION JOINT

(SCALE 1:75)

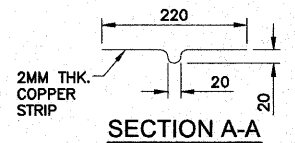

SECTION A-A

(SCALE 1:75)

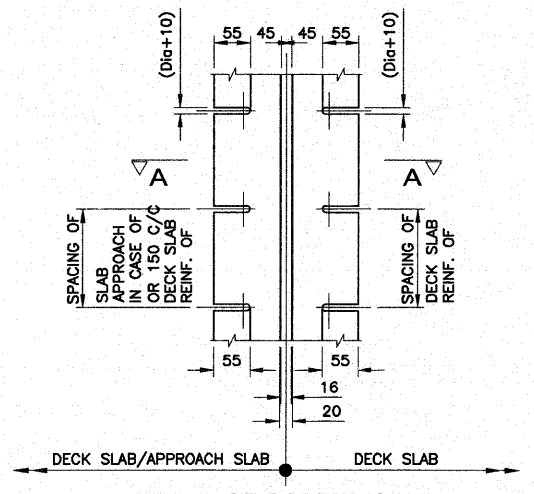

DETAIL OF COPPER STRIP

(SCALE 1:75)

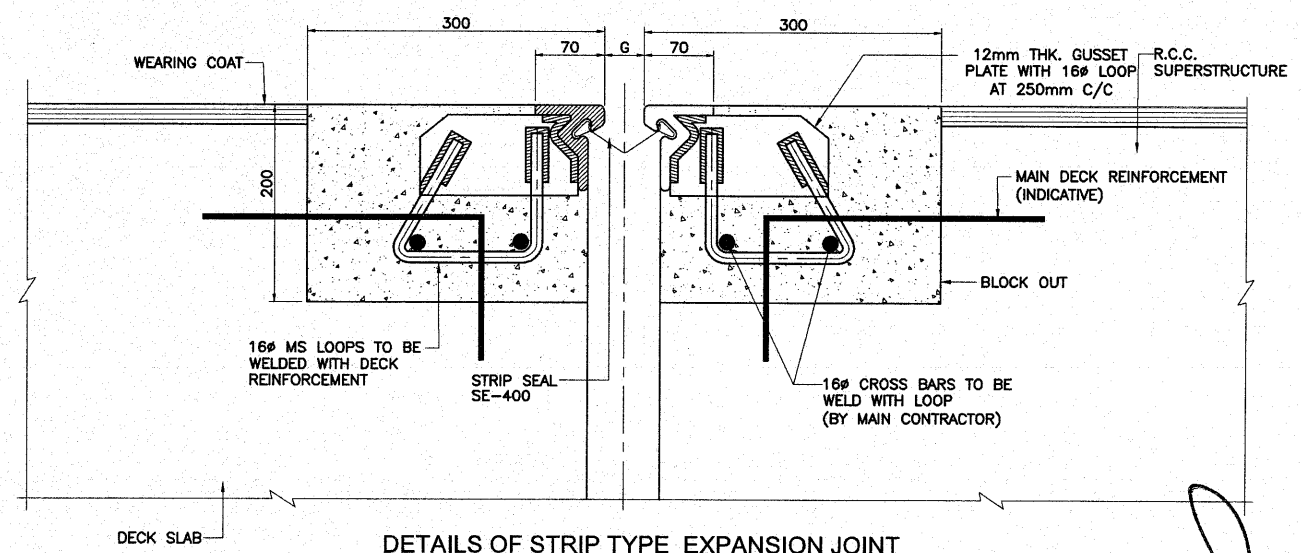

DETAILS OF STRIP TYPE EXPANSION JOINT

(SCALE 1:1)

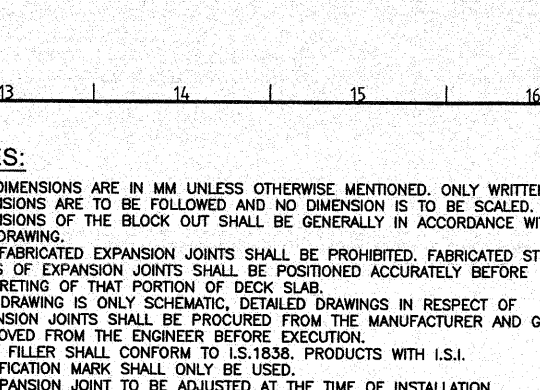

DETAILS OF EDGE BEAM

(SCALE 1:1)

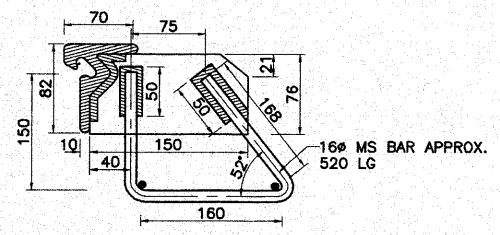

ANCHORAGE LOOP DETAIL

(SCALE 1:1)

STRIP SEAL SE-400

(SCALE 1:1)

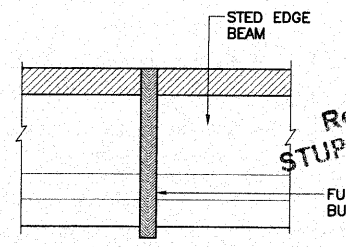

SPLICING DETAILS

(SCALE 1:1)

NOTES:

1. ALL DIMENSIONS ARE IN MM UNLESS OTHERWISE MENTIONED. ONLY WRITTEN DIMENSIONS ARE TO BE FOLLOWED AND NO DIMENSION IS TO BE SCALED.
2. DIMENSIONS OF THE BLOCK OUT SHALL BE GENERALLY IN ACCORDANCE WITH THE DRAWING.
3. SITE FABRICATED EXPANSION JOINTS SHALL BE PROHIBITED. FABRICATED STEEL PARTS OF EXPANSION JOINTS SHALL BE POSITIONED ACCURATELY BEFORE CONCRETING OF THAT PORTION OF DECK SLAB.
4. THIS DRAWING IS ONLY SCHEMATIC, DETAILED DRAWINGS IN RESPECT OF EXPANSION JOINTS SHALL BE PROCURED FROM THE MANUFACTURER AND GET APPROVED FROM THE ENGINEER BEFORE EXECUTION.
5. JOINT FILLER SHALL CONFORM TO I.S.1838. PRODUCTS WITH I.S.I. CERTIFICATION MARK SHALL ONLY BE USED.
6. G–EXPANSION JOINT TO BE ADJUSTED AT THE TIME OF INSTALLATION DEPENDING ON THE AMBIENT TEMPERATURE. (TO BE ADVISED BY THE ENGINEER–IN–CHARGE)
7. LINK BARS OF VARIOUS SIZES DEPENDING UPON SITE CONDITIONS ARE USED TO FACILITATE CONNECTIVITY WITH MAIN DECK REINFORCEMENT & TO BE PROVIDED BY MAIN CONTRACTOR AT THE TIME OF INSTALLATION.
8. BLOCK OUT SHALL BE CLEANED THOROUGHLY AND MUST BE FREE OF DIRT AND DEBRIS. NO LOOSE CONCRETE SHALL BE PRESENT IN BLOCK OUT AS PER MORT&H SPECIFICATIONS.
9. EXPANSION JOINT SHALL FOLLOW DECK PROFILE.
10. NEOPRENE SEAL SHALL BE CONTINUOUS.
11. MAIN REINFORCEMENT IN THE DECK TO BE INTEGRATED IN THE ANCHOR LOOPS/ CROSS BARS FOR PROPER BOND AND ANCHORAGE.
12. OPENING MAXIMUM 40MM MINIMUM 5MM.
13. THE INSTALLATION SHALL BE SUPERVISED BY THE REPRESENTATIVE OF MANUFACTURER.
14. THE JOINT SHALL BE INSTALLED ONLY AFTER WEARING COAT IS LAID & REQUIRED GROOVE IS CUT.
15. THE GRADE OF CONCRETE IN BLOCK OUT SHALL NOT BE LESS THAN THAT OF CONCRETE IN DECK SLAB WITH 20MM DOWN SIZE AGGREGATE.
16. THE CONCRETE IN BLOCK OUT SHALL BE CURED CONTINUOUSLY FOR A MINIMUM OF 7DAYS BEFORE INSTALLATION OF GLANDS.
17. CONCRETE SLUMP, W/C RATIO, ETC., SHALL BE AS RECOMMENDED BY ENGINEER IN CHARGE.
18. ELECTRODES FOR WELDING EDGE BEAM, M.S. PLATES, ETC., SHALL BE AS PER MANUFACTURERS SPECIFICATIONS.
19. THIS DRAWING SHALL BE READ IN CONJUNCTION WITH THE RESPECTIVE BRIDGE DRAWINGS.

Acting Team Leader
STUP Consultants Pvt. Ltd.
Nagaon, Assam

Resident Engineer
STUP Consultants Pvt. Ltd.
Nagaon, Assam

AECOM India Private Limited
Gurgaon

Rev.	Date	Description on Revisions
R0	14-09-2017	FIRST SUBMISSION

Revisions

CLIENT:- NATIONAL HIGHWAYS & INFRASTRUCTURE (Development Coporation Ltd)

AUTHORITY'S ENGINEER: STUP Consultants P. Ltd & Ayoleeza Consultants P. Ltd.

AUTHORISED SIGNATORY | DATE

PROOF CHECK CONSULTANT:- CETEST Engineering Consultants C.E. TESTING COMPANY PVT. LTD.

AUTHORISED SIGNATORY | DATE

SAEFTY CONSULTANT:- Chaitanya Projects Consultancy Pvt. Ltd

AUTHORISED SIGNATORY | DATE

PROJECT: FOUR LANING OF NH-37 FROM RANGAGARA TO KALIABOR TINIALI (CH: 297.000 KM TO CH: 315.315 KM) IN NAGAON DISTRICT IN THE STATE OF ASSAM UNDER SARDP-NE, PHASE A ON EPC MODE

EPC CONTRACTOR:- SIMPLEX INFRASTRUCTURES LIMITED, 27, SHAKESPEARE SARANI, KOLKATA-17, INDIA

CONSULTANTS:- AECOM, 9th Floor, Infinity Tower C DLF Cyber City, DLF Phase II, Gurgaon-122002, Haryana, India

DRAWN	DESIGN	CHECKED BY	APPROVED BY
MANISH VERMA	S. YADAV	S. P. SINGH	S. RASTOGI

SCALE:- AS SHOWN

TITLE:- MISCELLANEOUS DRAWINGS (TYPICAL DETAILS OF FILLER TYPE AND STRIP SEAL TYPE EXPANSION JOINT)

DRAWING NO.:- AECOM-DELD15159-DD-DWG-MISC-01 (SH5 OF 7) REV. R0

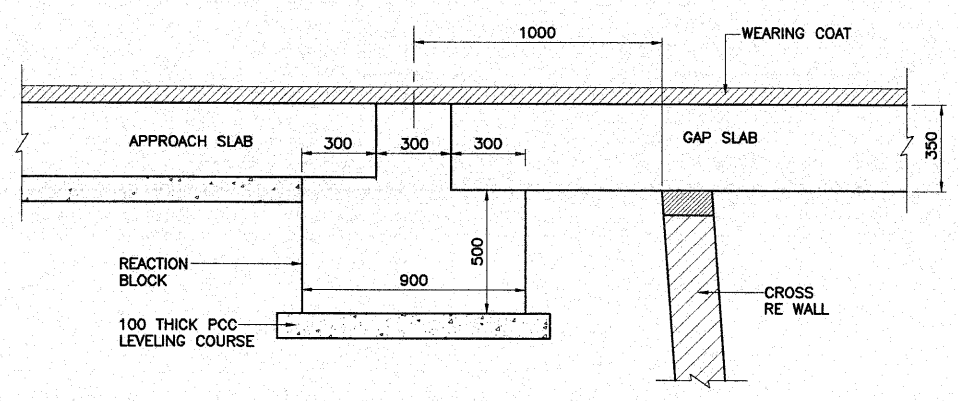

DIMENSION DETAILS OF REACTION BLOCK

(SCALE 1:20)

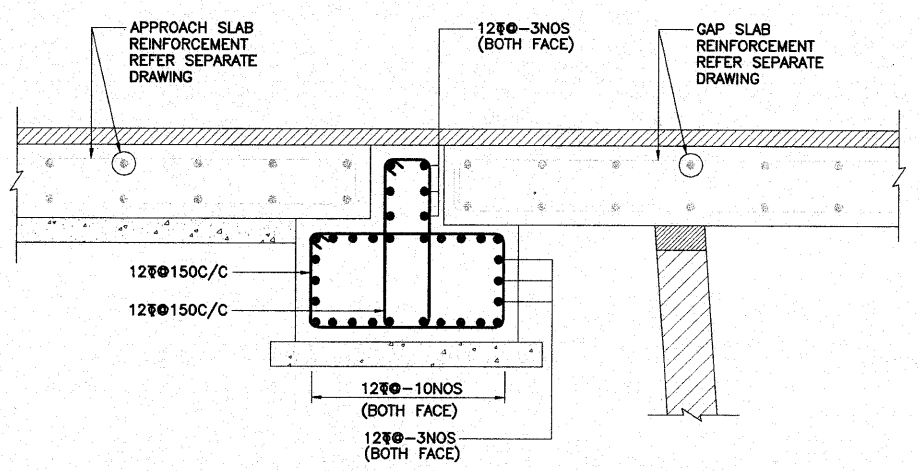

REINFORCEMENT DETAILS OF REACTION BLOCK

(SCALE 1:20)

NOTES:

1. ALL DIMENSIONS ARE IN MM UNLESS OTHERWISE MENTIONED. ONLY WRITTEN DIMENSIONS ARE TO BE FOLLOWED.
2. THE CONCRETE GRADE SHALL BE M30.
3. THE REINFORCEMENT SHALL BE HYSD BARS OF GRADE DESIGNATION Fe 500D CONFORMING TO IS:1786–2008.
4. CLEAR COVER TO OUTERMOST REINFORCEMENT SHALL BE 40MM.
5. THIS DRAWING SHALL BE READ IN CONJUNCTION WITH THE RESPECTIVE BRIDGES/GRADE SEPARATOR DRAWINGS.

Acting Team Leader
STUP Consultants Pvt. Ltd.
Nagaon, Assam

Resident Engineer
STUP Consultants Pvt. Ltd.
Nagaon, Assam

AECOM India Private Limited (Gurgaon)

Rev.	Date	Description on Revisions
R0	14-09-2017	FIRST SUBMISSION

Revisions

CLIENT:- NATIONAL HIGHWAYS & INFRASTRUCTURE (Development Coporation Ltd)

AUTHORITY'S ENGINEER: STUP Consultants P. Ltd & Ayoleeza Consultants P. Ltd.

AUTHORISED SIGNATORY | DATE

PROOF CHECK CONSULTANT:- CETEST CETESTING COMPANY PVT. LTD.

AUTHORISED SIGNATORY | DATE

SAEFTY CONSULTANT:- Chaitanya Projects Consultancy Pvt. Ltd

AUTHORISED SIGNATORY | DATE

PROJECT: FOUR LANING OF NH-37 FROM RANGAGARA TO KALIABOR TINIALI (CH: 297.000 KM TO CH: 315.315 KM) IN NAGAON DISTRICT IN THE STATE OF ASSAM UNDER SARDP-NE, PHASE A ON EPC MODE

EPC CONTRACTOR:- SIMPLEX INFRASTRUCTURES LIMITED, 27, SHAKESPEARE SARANI, KOLKATA-17, INDIA

CONSULTANTS:- AECOM, 9th Floor, Infinity Tower C DLF Cyber City, DLF Phase II, Gurgaon-122002, Haryana, India

MANISH VERMA	S. YADAV	S. P. SINGH	S. BASTOGI
DRAWN	DESIGN	CHECKED BY	APPROVED BY

SCALE:- AS SHOWN

TITLE:- MISCELLANEOUS DRAWINGS (TYPICAL DIMENSION AND REINFORCEMENT DETAILS OF REACTION BLOCK)

DRAWING NO.:- AECOM-DELD15159-DD-DWG-MISC-01 (SH6 OF 7) REV. R0

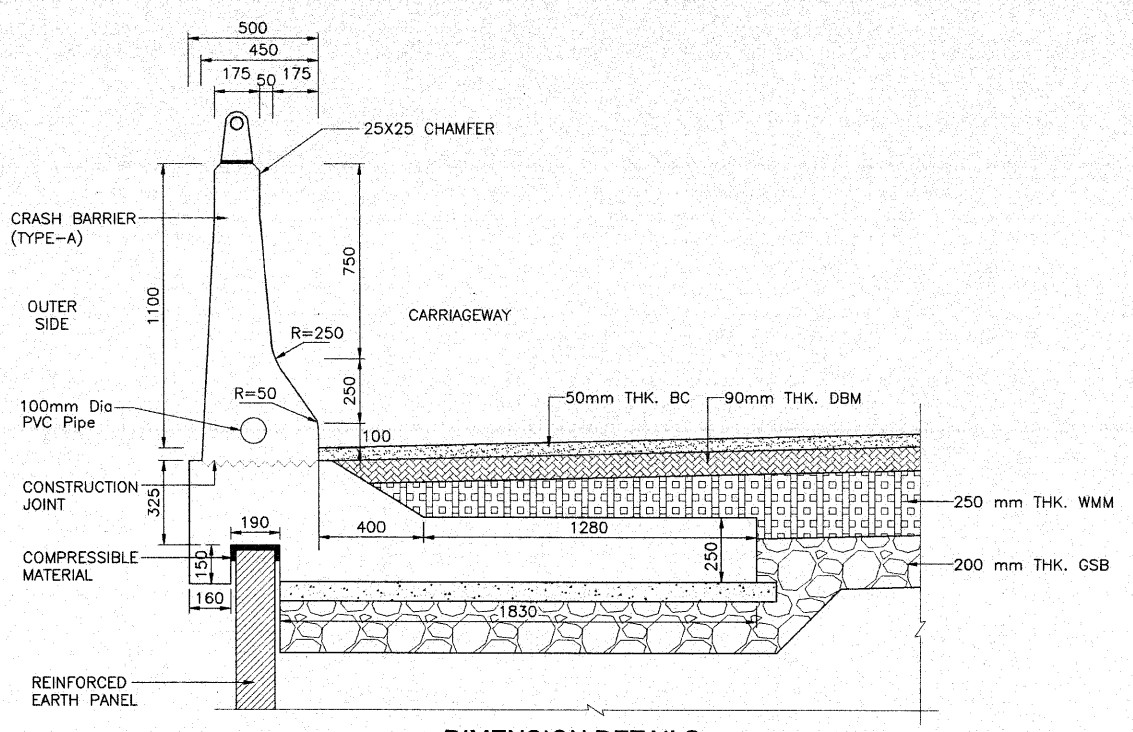

DIMENSION DETAILS

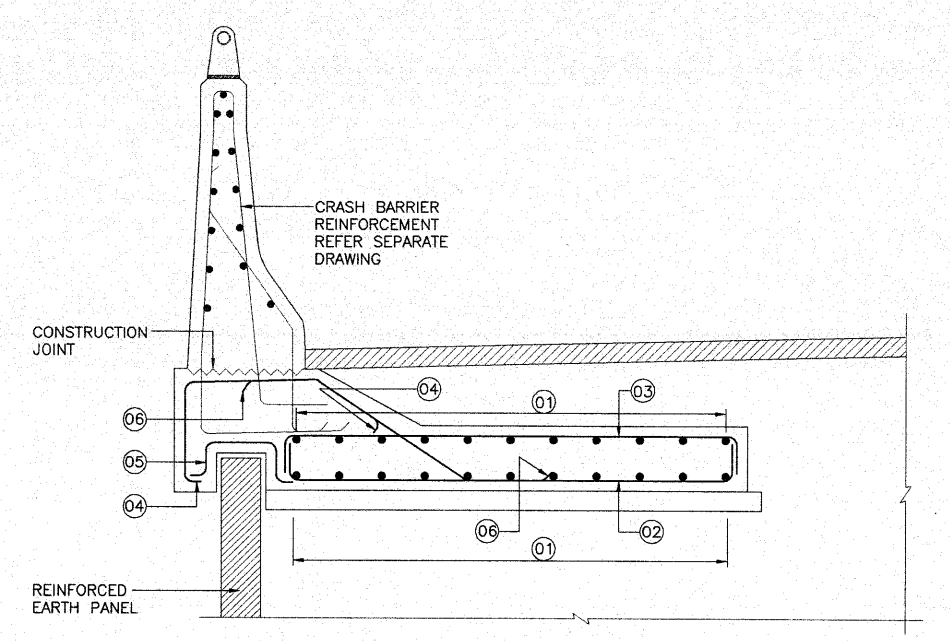

REINFORCEMENT DETAILS

TYPICAL ARRANGEMENT OF FRICTION SLAB WITH CRASH BARRIER ON RE WALL

(SCALE 1:20)

REINFORCEMENT DETAILS

BAR MARK	SHAPE	BAR DIA & SPACING/Nos.
01	100 100	12 ϕ @ 200 C/C
02	100 100	12 ϕ @ 150 C/C
03	100 100	12 ϕ @ 150 C/C
04	300	12 ϕ @ 150 C/C
05		12 ϕ @ 150 C/C
05	300	12 ϕ @ 150 C/C

NOTES:

1. ALL DIMENSIONS ARE IN MM UNLESS OTHERWISE MENTIONED. ONLY WRITTEN DIMENSIONS ARE TO BE FOLLOWED.
2. THE CRASH BARRIER DESIGN HAS BEEN ADOPTED AS PER CLAUSE 109.6.3 OF IRC:5-2015.
3. CONCRETE SHALL BE DESIGN MIX WITH A MINIMUM 28 DAYS CHARACTERISTIC CUBE STRENGTH FOR DIFFERENT ELEMENTS AS FOLLOWS:
   a. RCC CRASH BARRIER – M40
   b. RCC FRICTION SLAB – M40
4. THE REINFORCEMENT SHALL BE HYSD BARS OF GRADE DESIGNATION Fe 500D CONFORMING TO IS:1786-2008.
5. CLEAR COVER TO OUTERMOST STEEL IS 40MM.
6. DOWEL BARS OF THE CRASH BARRIER SHALL BE PROPERLY ANCHORED INTO THE DECK SLAB.
7. SUITABLE REFLECTIVE (LUMINOUS) DEVICES SHALL BE PROVIDED ON THE TRAFFIC FACE OF THE BARRIER AT SUITABLE INTERVALS TO ENSURE ADEQUATE VISIBILITY DURING NIGHT AND FOGGY CONDITIONS.
8. PAINTING SHALL BE DONE ON CRASH BARRIER INCLUDING ZEBRA MARKS.
9. PROVIDING AND FIXING 65MM NB MS PIPE RAIL WITH VERTICAL STIFFNER, BASE PLATE ANCHOR BOLTS AT SPACING AS MENTIONED IN DRAWING ON CRASH BARRIER COMPLETE INCLUDING PROVIDING THREE OR MORE COATS OF EPOXY PAINT OF APPROVED COLOUR, MAKE AND QUALITY OVER A COAT OF EPOXY PRIMER COMPLETE AS PER DRAWINGS AND TECHNICAL SPECIFICATIONS SECTIONS 1900 & CLAUSE 2703.
10. THIS DRAWING SHALL BE READ IN CONJUNCTION WITH THE RESPECTIVE BRIDGE DRAWINGS.

LEGEND:

WC – WEARING COAT
PQC – PAVEMENT QUALITY CONCRETE
DLC – DRY LEAN CONCRETE
RE – REINFORCED EARTH

Acting Team Leader
STUP Consultants Pvt. Ltd.
Nagaon, Assam

Resident Engineer
STUP Consultants Pvt. Ltd.
Nagaon, Assam

Rev.	Date	Description on Revisions
R0	14-09-2017	FIRST SUBMISSION

Revisions

CLIENT:- NATIONAL HIGHWAYS & INFRASTRUCTURE (Development Coporation Ltd)

AUTHORITY'S ENGINEER: STUP Consultants P. Ltd & Ayoleeza Consultants P. Ltd.
AUTHORISED SIGNATORY | DATE

PROOF CHECK CONSULTANT:- CETEST C E TESTING COMPANY PVT. LTD.
AUTHORISED SIGNATORY | DATE

SAEFTY CONSULTANT:- Chaitanya Projects Consultancy Pvt. Ltd
AUTHORISED SIGNATORY | DATE

PROJECT: FOUR LANING OF NH-37 FROM RANGAGARA TO KALIABOR TINIALI (CH: 297.000 KM TO CH: 315.315 KM) IN NAGAON DISTRICT IN THE STATE OF ASSAM UNDER SARDP-NE, PHASE A ON EPC MODE

EPC CONTRACTOR:- SIMPLEX INFRASTRUCTURES LIMITED, 27, SHAKESPEARE SARANI, KOLKATA-17, INDIA

CONSULTANTS:- AECOM, 9th Floor, Infinity Tower C DLF Cyber City, DLF Phase II, Gurgaon-122002, Haryana, India

DRAWN	DESIGN	CHECKED BY	APPROVED BY
MANISH VERMA	S. YADAV	S. P. SINGH	S. RASTOGI

SCALE:- AS SHOWN

TITLE:- MISCELLANEOUS DRAWINGS (TYPICAL DIMENSION & REINFORCEMENT DETAIL OF CRASH BARRIER WITH RETAINING WALL & RIGID PAVEMENT)

DRAWING NO.:- AECOM-DELD15159-DD-DWG-MISC-01 (SH7 OF 7) REV. R0

NATIONAL HIGHWAYS & INFRASTRUCTURE DEVELOPMENT CORPORATION LTD.

Four Laning of NH-37 from Rangagara to Kaliabor Tiniali (Ch: 297.000 Km to Ch 315.315 Km of NH - 37) in Nagaon District in the State of Assam under SARDP-NE, Phase A, on EPC Basis

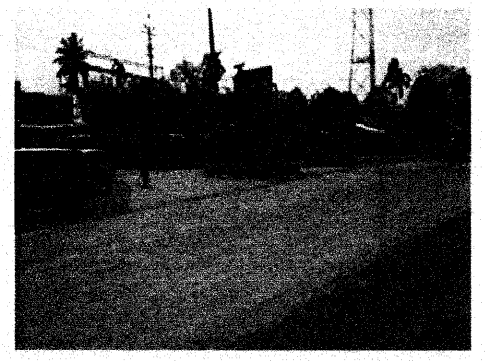

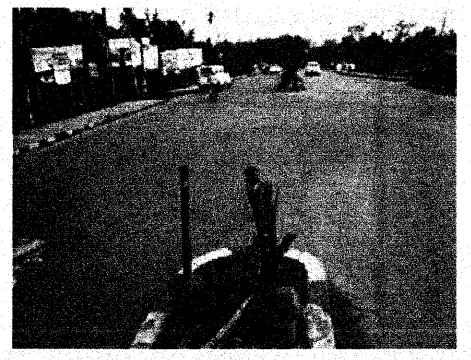

SERVICE ROAD PLAN & PROFILE

Km 301+800 to 302+000 (BHS), Km 306+665 to 307+000 (BHS)

CONTRACTOR:-

SIMPLEX INFRASTRUCTURES LIMITED

SEPTEMBER 2021

CONSULTANTS:-

AECOM

AECOM India Private Limited

INDEX

DESCRIPTION	DRAWING NO.
COVER PAGE	
INDEX	
TYPICAL CROSS SECTION	
TYPICAL CROSS SECTION FOR 4-LANE WITH SERVICE ROAD (ECCENTRIC WIDENING LHS)	AECOM-DELD15159-DD-DWG-TCS-004
TYPICAL CROSS SECTION FOR 4-LANE WITH PROVISION OF SERVICE ROAD LHS/RHS	AECOM-DELD15159-DD-DWG-TCS-004A
TYPICAL CROSS SECTION FOR 4-LANE WITH PROVISION OF LHS COVERED DRAIN	AECOM-DELD15159-DD-DWG-TCS-004A
SERVICE ROAD PLAN & PROFILE	
From Km. 301+800 To Km. 302+000 (LHS)	AECOM-DELD15159-DD-DWG-PP- 0201
From Km. 301+800 To Km. 302+000 (RHS)	AECOM-DELD15159-DD-DWG-PP- 0202
From Km. 306+665 To Km. 307+000 (LHS)	AECOM-DELD15159-DD-DWG-PP- 0205
From Km. 306+665 To Km. 307+000 (RHS)	AECOM-DELD15159-DD-DWG-PP- 0206

Rev.	Date	Description on Revision
R0	Sep. 2021	First submission

Revisions

CLIENT:- NATIONAL HIGHWAYS & INFRASTRUCTURE DEVELOPMENT CORPORATION LTD.

AUTHORITY'S ENGINEER: STUP Consultants P. Ltd & Ayoleeza Consultants P. Ltd.

AUTHORISED SIGNATORY | DATE

PROOF CHECKED CONSULTANT:- CE TESTING Company Pvt. Ltd

AUTHORISED SIGNATORY | DATE

SAEFTY CONSULTANT:- Chaitanya Projects Consultancy Pvt. Ltd

AUTHORISED SIGNATORY | DATE

PROJECT: FOUR LANING OF NH-37 FROM RANGAGARA TO KALIABOR TINIALI (CH: 297.000 KM TO CH: 315.315 KM) IN NAGAON DISTRICT IN THE STATE OF ASSAM UNDER SARDP-NE, PHASE A ON EPC MODE

EPC CONTRACTOR:- SIMPLEX INFRASTRUCTURES LIMITED, 27, SHAKESPEARE SARANI, KOLKATA-17, INDIA

CONSULTANTS:- AECOM, 9th Floor, Infinity Tower C DLF Cyber City DLF Phase II, Gurgaon-122002, Haryana, India

DRAWN | DESIGN | SL Team Leader | MSR Design Director | CHECKED BY | APPROVED BY

SCALE:- NTS

TITLE:-

DRAWING NO.:- AECOM-DELD15159-DD-DWG- | REV. R0

AECOM India Private Limited Gurgaon

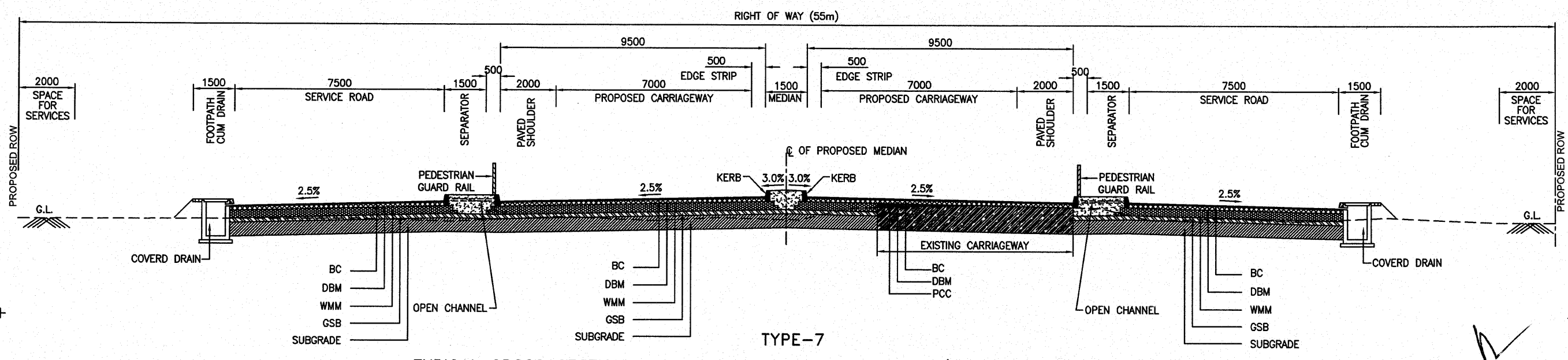

TYPE-7

TYPICAL CROSS SECTION FOR 4-LANE WITH SERVICE ROAD (ECCENTRIC WIDENING LHS)

Resident Engineer
STUP Consultants Pvt. Ltd.
Nagaon, Assam

Design Chainage as per Alighnment		Length(km)	Cross Section Type
from	To		
301+800	302+000	200	Type 7
306+665	307+000	335	Type 7

Acting Team Leader
STUP Consultants Pvt. Ltd.
Nagaon, Assam

Note:
1. Right of Way (ROW) as shown in TCS is meant to indicate proposed cross section of highway shall be accommodated within ROW.
2. Actual Right of Way (ROW) has marked in Alignment Plan based on data provided by AE vide letter ref: STUP / NH 37 / SIL / 2017 /01 dated 9 Feb 2017 and site meeting on 15 Feb 2017.

Rev.	Date	Description on Revisions
R2	Sep 2021	Revised as per AE comment dated 05 Aug. 2021
R1	Nov 2017	Revised as per AE comment dated 09 Oct. 2017
R0	Aug 2017	First Submission

Revisions

CLIENT:- NATIONAL HIGHWAYS & INFRASTRUCTURE DEVELOPMENT CORPORATION LTD.

AUTHORITY'S ENGINEER: STUP Consultants P. Ltd & Ayoleeza Consultants P. Ltd.

PROOF CHECK CONSULTANT:- CE TESTING Pvt. Ltd

SAEFTY CONSULTANT:- Chaitanya Projects Consultancy Pvt. Ltd

AUTHORISED SIGNATORY | DATE | AUTHORISED SIGNATORY | DATE | AUTHORISED SIGNATORY | DATE

PROJECT: FOUR LANING OF NH-37 FROM RANGAGARA TO KALIABOR TINIALI (CH: 297.000 KM TO CH: 315.315 KM) IN NAGAON DISTRICT IN THE STATE OF ASSAM UNDER SARDP-NE, PHASE A ON EPC MODE

EPC CONTRACTOR:- SIMPLEX INFRASTRUCTURES LIMITED, 27, SHAKESPEARE SARANI, KOLKATA-17, INDIA

CONSULTANTS:- AECOM, 9th Floor, Infinity Tower C DLF Cyber City, DLF Phase II, Gurgaon-122002, Haryana, India

DRAWN	DESIGN	CHECKED BY	APPROVED BY
		SL Team Leader	MSR Group Director

SCALE:- 1 : 1000

TITLE:- TYPICAL CROSS SECTION

DRAWING NO.:- AECOM-DELD15159-DD-DWG-TCS- 004 REV. R2